DEFENSE INFORMATION SYSTEMS AGENCY
P. O. BOX 4502
ARLINGTON, VIRGINIA 22204-4502

IN REPLY REFER TO: Joint Interoperability Test Command (JTE) **18 Aug 08**

MEMORANDUM FOR DISTRIBUTION

Subject**:** Special Interoperability Test Certification of the Amcom Software Inc., Computer Telephony Integration (CTI) Release 4.0.6 with Alcatel-Lucent's 8520 and 8528T Integrated Services Digital Network (ISDN) Voice Terminal Hard Consoles

References: (a) DoD Directive 4630.5, "Interoperability and Supportability of Information Technology (IT) and National Security Systems (NSS)," 5 May 2004
(b) CJCSI 6212.01D, "Interoperability and Supportability of Information Technology and National Security Systems," 8 March 2006
(c) and (d), see enclosure 1

1. References (a) and (b) establish the Defense Information Systems Agency, Joint Interoperability Test Command (JITC), as the responsible organization for interoperability test certification.

2. The Amcom Software Inc., CTI Release 4.0.6 with Alcatel-Lucent's 8520 and 8528T ISDN Voice Terminal Hard Consoles is hereinafter referred to as the System Under Test (SUT). The Amcom CTI workstation Personal Computer (PC) connects to the Alcatel-Lucent's 8520 and 8528T ISDN Voice Terminal Hard Consoles via a serial cable, which enables Amcom CTI operators to have access to the same features and functions as the Alcatel-Lucent 8520 and 8528T ISDN Voice terminal hard consoles. The SUT was tested with the Alcatel-Lucent Class 5 Electronic Switching System (5ESS). JITC analysis determined a minor risk in certifying the SUT with all versions of Alcatel-Lucent 5ESS, the Alcatel-Lucent Compact Digital Exchange (CDX), and Alcatel-Lucent Very Compact Digital Exchange (VCDX) switching systems listed on the Defense Switched Network (DSN) Approved Products List (APL). The SUT meets all of the critical interoperability requirements for an Attendant Console and is certified for joint use within the DSN when used with any of these switching systems. The SUT met the critical interoperability requirements for attendant services set forth in reference (c). Testing was conducted using test procedures derived from reference (d). No other configurations, features, or functions, except those cited within this report, are certified by the JITC, or authorized by the Program Management Office for use within the DSN. This certification expires upon changes that affect interoperability, but no later than three years from the date of this memorandum.

3. This certification is based on interoperability testing conducted 28 April through 9 May 2008, by the JITC at the Global Information Grid Network Test Facility, Fort Huachuca, Arizona. The Certification Testing Summary (enclosure 2) documents the test results and describes the test network.

4. The Functional Requirements used to evaluate the interoperability of the SUT and the interoperability statuses are indicated in table 1.

Table 1. SUT Functional Requirements and Interoperability Status

Interface	Critical	Certified	Critical Functional Requirements	Met	UCR Paragraph
ISDN BRI with 5ECustom Protocol	Yes	Yes	Precedence and Preemption (R)	Yes	2.2.1
			Call Display (R)	Yes	2.2.2
			Class of Service Override (R)	Yes	2.2.3
			Busy Override and Busy Verification (R)	Yes	2.2.4
			Night Service (R)	Yes	2.2.5
			Automatic Recall of Attendant (R)	Yes	2.2.6
			Calls in Queue to the Attendant (R)	Yes	2.2.7

LEGEND:
5E - Class 5 Electronic Switching System
BRI - Basic Rate Interface
ISDN - Integrated Services Digital Network
R - Required
SUT - System Under Test
UCR - Unified Capabilities Requirements

5. JITC distributes interoperability information via the JITC Electronic Report Distribution (ERD) system, which uses Unclassified but Sensitive Internet Protocol Router Network (NIPRNet) e-mail. More comprehensive interoperability status information is available via the JITC System Tracking Program (STP). The STP is accessible by .mil/.gov users on the NIPRNet at https://stp.fhu.disa.mil/. Test reports, lessons learned, and related testing documents and references are on the JITC Joint Interoperability Tool (JIT) at http://jit.fhu.disa.mil (NIPRNet), or http://199.208.204.125/ (SIPRNet). Information related to DSN testing is on the Telecom Switched Services Interoperability (TSSI) website at http://jitc.fhu.disa.mil/tssi.

6. The JITC point of contact is Mr. Michael Napier, DSN 879-6787, commercial (520) 538-6787, FAX DSN 879-4347, or e-mail to michael.napier@disa.mil. The JITC's mailing address is P.O. Box 12798, Fort Huachuca, AZ 85670-2798. The tracking number for the SUT is 0801007.

FOR THE COMMANDER:

2 Enclosures a/s

RICHARD A. MEADOR
Chief
Battlespace Communications Portfolio

JITC Memo, JTE, Special Interoperability Test Certification of the Amcom Software Inc., Computer Telephony Integration (CTI) Release 4.0.6 with Alcatel-Lucent's 8520 and 8528T Integrated Services Digital Network (ISDN) Voice Terminal Hard Consoles

Distribution (electronic mail):
Joint Staff J-6
Joint Interoperability Test Command, Liaison, TE3/JT1
Office of Chief of Naval Operations, CNO N6F2
Headquarters U.S. Air Force, Office of Warfighting Integration & CIO, AF/XCIN (A6N)
Department of the Army, Office of the Secretary of the Army, DA-OSA CIO/G-6 ASA (ALT), SAIS-IOQ
U.S. Marine Corps MARCORSYSCOM, SIAT, MJI Division I
DOT&E, Net-Centric Systems and Naval Warfare
U.S. Coast Guard, CG-64
Defense Intelligence Agency
National Security Agency, DT
Defense Information Systems Agency, TEMC
Office of Assistant Secretary of Defense (NII)/DOD CIO
U.S. Joint Forces Command, Net-Centric Integration, Communication, and Capabilities Division, J68
Defense Information Systems Agency, GS23

ADDITIONAL REFERENCES

(c) Defense Information Systems Agency, "Department of Defense Voice Networks Unified Capabilities Requirements, 21 December 2007

(d) Joint Interoperability Test Command, "Defense Switched Network Generic Switch Test Plan (GSTP), Change 2," 2 October 2006

CERTIFICATION TESTING SUMMARY

1. SYSTEM TITLE. The Amcom Software Inc., Computer Telephony Integration (CTI) Release 4.0.6 with Alcatel-Lucent's 8520 and 8528T Integrated Services Digital Network (ISDN) Voice Terminal Hard Consoles, hereinafter referred to as System Under Test (SUT).

2. PROPONENT. Headquarters United States Army Information Systems Engineering Command (HQ USAISEC).

3. PROGRAM MANAGER. Mr. Gary Kitsmiller, AMSEL-IE-IS, Building 53301, Fort Huachuca, Arizona, 85613-5300, e-mail: gary.kitsmiller@us.army.mil.

4. TESTER. Joint Interoperability Test Command (JITC), Fort Huachuca, Arizona.

5. SYSTEM UNDER TEST DESCRIPTION. The SUT is an Attendant Console. The Amcom CTI workstation Personal Computer (PC) connects to the Alcatel-Lucent's 8520 and 8528T ISDN Voice Terminal Hard Consoles via a serial cable, which enables Amcom CTI operators to have access to the same features and functions as the Alcatel-Lucent 8520 and 8528T ISDN Voice terminal hard consoles. The Amcom CTI PC employs Phone Server software Version 4.0.6 running on the Windows XP Professional Operating System. The SUT features include:

- Answering, parking, holding, and transferring calls.
- Position busy, end-to-end signaling, busy verification, and display of queued calls.
- Call forwarding, do not disturb, serial calls, trouble key, and trunk access control.
- Call handling, control, and security features.
- Set of screen and web-based applications including directory services, paging, messaging, and on-call scheduling.

6. OPERATIONAL ARCHITECTURE. The Unified Capabilities Requirements (UCR) Defense Switched Network (DSN) architecture in figure 2-1 depicts the relationship of the SUT to the DSN switches.

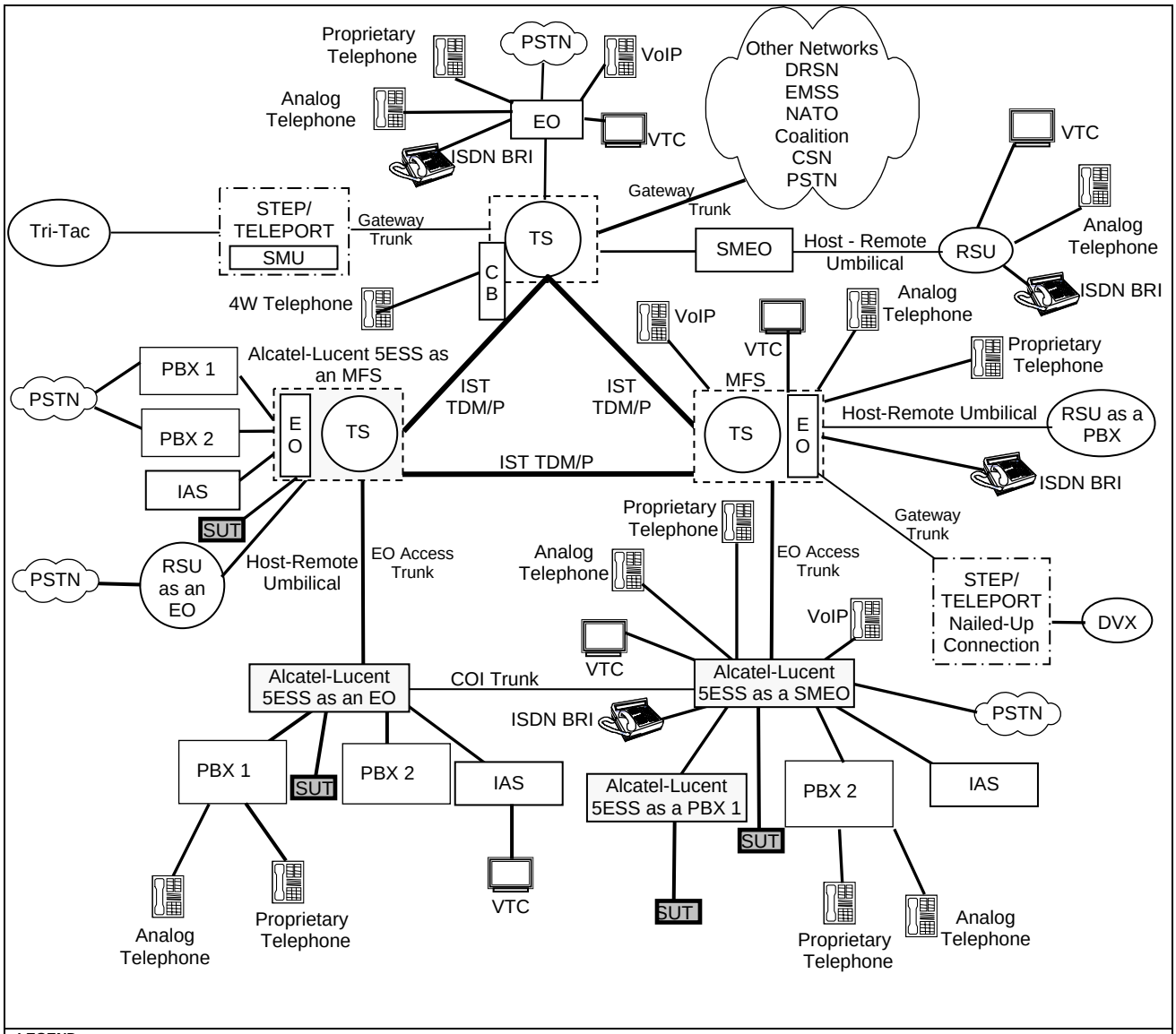

LEGEND:

4W	- 4-Wire	NATO	- North Atlantic Treaty Organization
5ESS	- Class 5 Electronic Switching System (See note.)	PBX	- Private Branch Exchange
BRI	- Basic Rate Interface	PBX 1	- Private Branch Exchange 1
CB	- Channel Bank	PBX 2	- Private Branch Exchange 2
COI	- Community of Interest	PSTN	- Public Switched Telephone Network
CSN	- Canadian Switch Network	RSU	- Remote Switching Unit
DRSN	- Defense Red Switch Network	SMEO	- Small End Office
DSN	- Defense Switched Network	SMU	- Switched Multiplex Unit
DVX	- Deployable Voice Exchange	STEP	- Standardized Tactical Entry Point
EMSS	- Enhanced Mobile Satellite System	SUT	- System Under Test
EO	- End Office	TDM/P	- Time Division Multiplex/Packetized
IAS	- Integrated Access Switch	Tri-Tac	- Tri-Service Tactical Communications Program
ISDN	- Integrated Services Digital Network	TS	- Tandem Switch
IST	- Interswitch Trunk	VoIP	- Voice over Internet Protocol
MFS	- Multifunction Switch	VTC	- Video Teleconferencing

NOTE: The SUT is certified with all versions of Alcatel-Lucent 5ESS, the Alcatel-Lucent Compact Digital Exchange (CDX), and Alcatel-Lucent Very Compact Digital Exchange (VCDX) switching systems listed on the DSN Approved Products List (APL).

Figure 2-1. DSN Architecture

7. REQUIRED SYSTEM INTERFACES. Requirements specific to the SUT and interoperability results are listed in table 2-1. These requirements are derived from the UCR Interface and Functional Requirements and were verified through JITC testing.

Table 2-1. SUT Functional Requirements and Interoperability Status

Interface	Critical	Certified	Critical Functional Requirements	Met	UCR Paragraph
ISDN BRI with 5ECustom Protocol	Yes	Yes	Precedence and Preemption (R)	Yes	2.2.1
			Call Display (R)	Yes	2.2.2
			Class of Service Override (R)	Yes	2.2.3
			Busy Override and Busy Verification (R)	Yes	2.2.4
			Night Service (R)	Yes	2.2.5
			Automatic Recall of Attendant (R)	Yes	2.2.6
			Calls in Queue to the Attendant (R)	Yes	2.2.7

LEGEND:
5E - Class 5 Electronic Switching System
BRI - Basic Rate Interface
ISDN - Integrated Services Digital Network
R - Required
SUT - System Under Test
UCR - Unified Capabilities Requirements

8. TEST NETWORK DESCRIPTION. The SUT was tested at JITC's Global Information Grid Network Test Facility in a manner and configuration similar to that of the DSN operational environment. Testing the system's required functions and features was conducted using the test configuration depicted in figure 2-2.

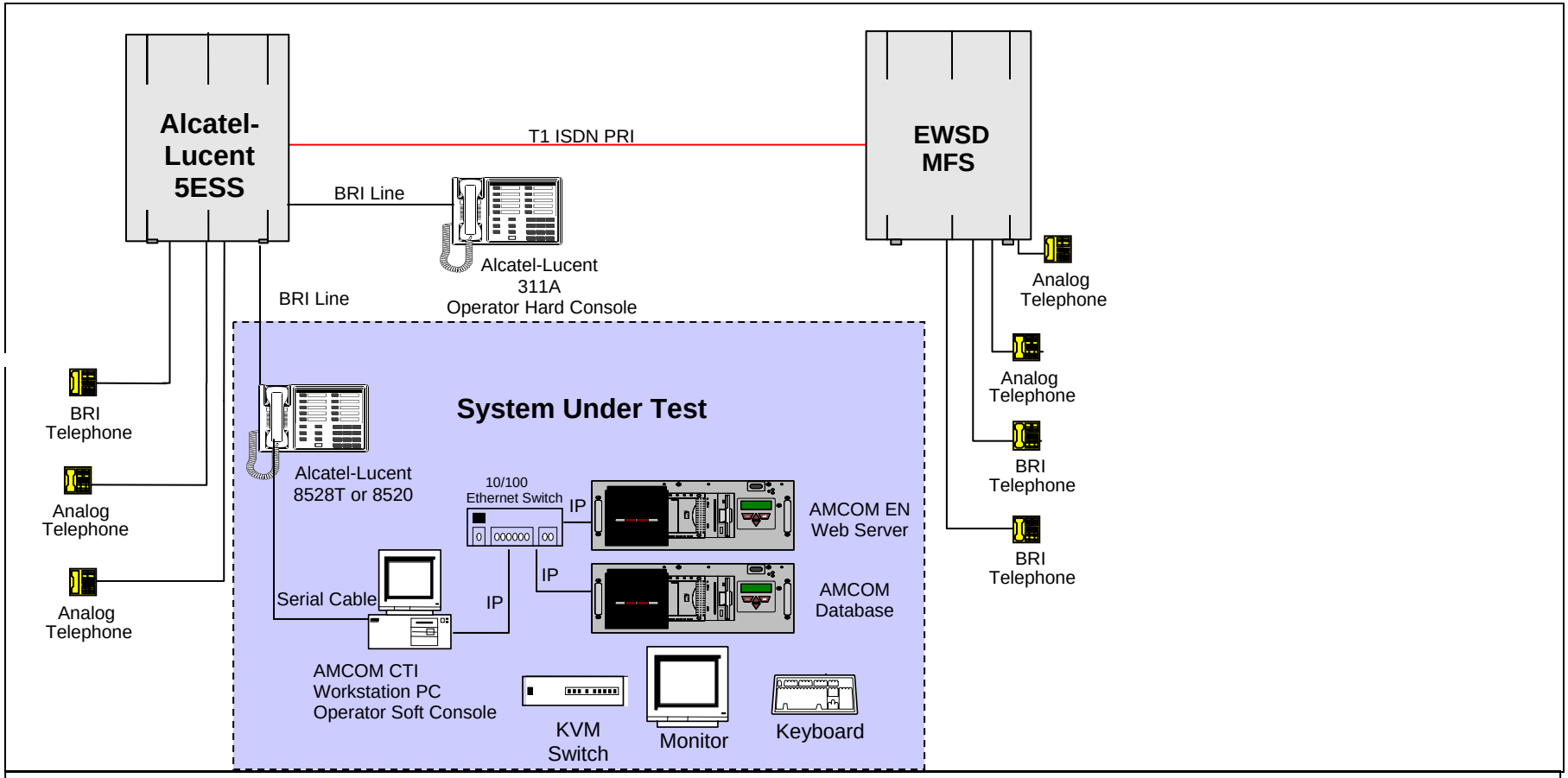

LEGEND:

5ESS	- Class 5 Electronic Switching System	IP	- Internet Protocol	PC	- Personal Computer
BRI	- Basic Rate Interface	ISDN	- Integrated Services Digital Network	PRI	- Primary Rate Interface
CTI	- Computer Telephony Integration	KVM	- Keyboard Video Mouse	SUT	- System Under Test
EN	- E-Notify	Mbps	- Megabits per second	T1	- Digital Transmission Link Level 1 (1.544 Mbps)
EWSD	- Elektronisches Wählsystem Digital	MFS	- Multifunction Switch		

Figure 2-2. SUT Test Configuration

9. SYSTEM CONFIGURATIONS. Table 2-2 provides the system configurations, hardware and software components tested with the SUT. The SUT was tested in an operationally realistic environment to determine interoperability with a complement of DSN switches noted in table 2-2. The DSN switches listed in table 2-2 only depict the tested configuration. Table 2-2 is not intended to identify the only switch software releases that are certified with the SUT. The SUT was tested with the Alcatel-Lucent 5ESS. The SUT is also certified with all versions of Alcatel-Lucent 5ESS, the Alcatel-Lucent Compact Digital Exchange (CDX), and Alcatel-Lucent Very Compact Digital Exchange (VCDX) switching systems listed on the DSN Approved Products List (APL).

Table 2-2. Tested System Configurations

System Name		Hardware/Software Release
Alcatel-Lucent 5ESS Digital Switching System		5E16.2 Broadcast Warning Message (BWM) 07-0003
Siemens EWSD		Release 19d Patch Set 46
Alcatel-Lucent 311A (Hard Console)		Version A1-A-03
SUT	Alcatel-Lucent 8528T Voice Terminal (Hard Console) See note.	Software ID FP3.6 08/13/96
SUT	Alcatel-Lucent 8520 Voice Terminal (Hard Console) See note.	Software ID FP3.2 05/02/94
SUT	Amcom Software Phone Server (Soft Console) (SUT)	Version 4.0.6
SUT	Oracle Client	Client 10G
SUT	HP DL-380 Server	RH Linux Enterprise ES 4.0 Oracle Enterprise Database 10 G Rel. Version 10.2.0.3 Oracle Application Server 10 G Rel. Version 10.1.2.0.2 AMCOM Application Server 4.0.6.1
SUT	Hewlett-Packard Compaq PC	Windows XP-Pro with Service Pack 2

LEGEND:

5ESS	- Class 5 Electronic Switching System	Rel	- Release
EWSD	- Elektronisches Wählsystem Digital	RH	- Red Hat
HP	- Hewlett-Packard	SUT	- System Under Test
ID	- Identification	XP-Pro	- Experience Professional
PC	- Personal Computer		

NOTE: The SUT is certified with both the Alcatel-Lucent 8528T and 8520 hard consoles, and can be purchased with both or either model.

10. TEST LIMITATIONS. None.

11. TEST RESULTS

a. Discussion

(1) The UCR, paragraph 2.2.1, states the attendant console shall interoperate with Multi-Level Precedence and Preemption (MLPP) as described in UCR, section 3. The console shall be able to initiate all levels of precedence calls (i.e., ROUTINE through FLASH-OVERRIDE). The SUT successfully met the requirements for MLPP as described in section 3 of reference (c).

(2) The UCR, paragraph 2.2.2, states the attendant console shall provide a visual display of the calling number, Class of Service (CoS), and precedence level for incoming direct dialed calls and diverted calls to the attendant. The SUT met these requirements.

(3) The UCR, paragraph 2.2.3, states the attendant shall provide the capability to override any class of service (calling area or precedence) of the calling party on a call-by-call basis. The SUT demonstrated this capability.

(4) The UCR, paragraph 2.2.4, states the attendant shall have the capability to override a busy line condition. If the called line being verified is busy, off-hook supervision shall be given to the attendant performing the busy verification. When a verification code is used, all digits of the code must be dialed before cut-through to the line can be accomplished. Connections to commercial Central Office access lines shall be restricted from busy verification access. The attendant shall have the capability to enter an existing busy line to inform the user of an incoming call. An override tone shall be provided to the busy line prior to the attendant entering the conversation, and the tone shall be repeated periodically as long as the attendant is connected. Selected stations may be classmarked to deny attendant break-in. In particular, it shall be possible to classmark the lines of selected stations (e.g., all data and secure voice) to preclude the busy verification or busy override being applied to the selected station lines. The SUT meets the following functional requirements for busy override and busy verification:

(a) The SUT successfully demonstrated the capability to override a busy line condition. If the called line being verified was busy, off-hook supervision was given to the attendant performing the busy verification.

(b) The SUT successfully demonstrated the capability to enter an existing busy line to inform the user of an incoming call. An override tone was provided to the busy line prior to the attendant entering the conversation, and the tone was repeated periodically as long as the attendant was connected.

(5) The UCR, paragraph 2.2.5, states the attendant console shall have the ability to route all calls normally directed to the console to a night service deflection. The night service deflection shall be a fixed or manually selected directory number. The SUT successfully demonstrated the ability to route all calls normally directed to the console to a night service deflection. The night service deflection was a fixed or manually selected directory number.

(6) The UCR, paragraph 2.2.6, states when an attendant extends a call to a station that is busy or does not answer within a preset time, the extended party shall be recalled automatically to the console. Recalls shall be transferred to the console that originally processed the call. If that console is busy, the recall shall be placed into the console queue; but if the console is out of service, the recall shall be routed to another console. When the SUT extends a call to a station that did not answer within a preset time, the extended party was automatically recalled only to the console that forwarded the call. In addition, if the call is extended to a station that is busy, recall is accomplished by the SUT by invoking a feature called “Camp-on”. This feature will allow the SUT to release call control to the extended caller who will receive ringback

and ring the called party as soon as the called party is hangs up. Because the basic functionality of this feature is supported by the SUT and the SUT's inability to recall to another console, other than the console that forwarded the call is considered to have a minor operational impact.

(7) The UCR, paragraph 2.2.7, states the attendant console shall have the capability to place calls in a waiting queue. Calls placed in queue to the attendant console shall be retrieved by the attendant in order of precedence level (FLASH-OVERRIDE first, ROUTINE last) and longest holding time. Calls in queue shall not be lost when a console is placed out of service or forwarded to night service deflection. When the console is placed out of service or forwarded to night service while calls are in queue, the console shall be capable of one of the following solutions:

(a) All calls in queue shall be forwarded first to the centralized attendant, then to night service.

(b) All subsequent calls placed to the attendant console shall be forwarded first to the centralized attendant and then to night service. The attendant console will be able to answer all remaining calls in queue, preventing any calls from being lost.

The SUT successfully demonstrated this requirement by forwarding all calls in queue to the night service deflection with the exception of the call offered to the SUT upon transfer. The call offered to the SUT upon transfer is answered then all subsequent calls placed to the SUT are forwarded to the night service deflection.

b. Test Summary. The Amcom CTI workstation Personal Computer (PC) connects to the Alcatel-Lucent's 8520 and 8528T ISDN Voice Terminal Hard Consoles via a serial cable, which enables Amcom CTI operators to have access to the same features and functions as the Alcatel-Lucent 8520 and 8528T ISDN Voice terminal hard consoles. The SUT was tested with the Alcatel-Lucent 5ESS. JITC analysis determined a minor risk in certifying the SUT with all versions of Alcatel-Lucent 5ESS and the Alcatel-Lucent CDX, and Alcatel-Lucent VCDX switching systems listed on the DSN APL. The SUT meets all of the critical interoperability requirements and is certified for joint use within the DSN. The SUT met the critical interoperability requirements for attendant services set forth in reference (c). Testing was conducted using test procedures derived from reference (d)

12. TEST AND ANALYSIS REPORT. No detailed test report was developed in accordance with the Program Manager's request. JITC distributes interoperability information via the JITC Electronic Report Distribution (ERD) system, which uses Unclassified-But-Sensitive Internet Protocol Router Network (NIPRNet) e-mail. More comprehensive interoperability status information is available via the JITC System Tracking Program (STP). The STP is accessible by .mil/gov users on the NIPRNet at https://stp.fhu.disa.mil. Test reports, lessons learned, and related testing documents and references are on the JITC Joint Interoperability Tool (JIT) at http://jit.fhu.disa.mil (NIPRNet), or http://199.208.204.125 (SIPRNet). Information related to DSN testing is

on the Telecom Switched Services International (TSSI) website at http://jitc.fhu.disa.mil/tssi.