DEFENSE INFORMATION SYSTEMS AGENCY
P. O. BOX 4502
ARLINGTON, VIRGINIA 22204-4502

IN REPLY REFER TO: Joint Interoperability Test Command (JTE)

MEMORANDUM FOR DISTRIBUTION **6 Apr 11**

SUBJECT: Special Interoperability Test Certification of the Avaya CS2100 XA-Core SE09.1 – Aura™ AS5300 Version 2.0 Multifunction Softswitch (MFSS) (with specified patch releases)

References: (a) DoD Directive 4630.05, "Interoperability and Supportability of Information Technology (IT) and National Security Systems (NSS)," 5 May 2004
(b) CJCSI 6212.01E, "Interoperability and Supportability of Information Technology and National Security Systems," 15 December 2008
(c) through (e), see Enclosure 1

1. References (a) and (b) establish the Joint Interoperability Test Command (JITC), as the responsible organization for interoperability test certification.

2. The Avaya CS2100 XA-Core SE09.1 - Aura™ AS5300 Version 2.0 MFSS (with specified patch releases), hereinafter referred to as the System Under Test (SUT) is certified for joint use in the Defense Information System Network (DISN) as an MFSS. The fielding of the SUT is limited to IP version 4 (IPv4) across the DISN based on the fielding environment and a Plan of Action and Milestones (PoAM) addressing critical IP version 6 (IPv6) discrepancies by 30 April 2011. The CS2100 provides only intra-enclave use of IPv4; the AS5300 provides intra-enclave IPv4 and IPv6. The certification status of the SUT will be verified during operational deployment. Any new discrepancy noted in the operational environment will be evaluated for impact on the existing certification. These discrepancies will be adjudicated to the satisfaction of DISA via a vendor PoAM, which will address all new critical TDRs within 120 days of identification. Testing was conducted using MFSS product requirements derived from References (c) and (d), and MFSS test procedures, derived from Reference (e). No other configurations, features, or functions, except those cited within this memorandum, are certified by JITC. This certification expires upon changes that affect interoperability, but no later than three years from the date the SUT was posted on the Unified Capabilities (UC) Approved Products List (APL) (1 September 2010).

3. This finding is based on interoperability testing conducted by JITC, review of the vendor's Letters of Compliance (LoC), and DISA Information Assurance (IA) Certification Authority (CA) approval of the IA configuration. Interoperability testing was conducted by JITC, Fort Huachuca, Arizona, from 29 June through 11 September 2009. Review of the vendor's LoC was completed on 7 October 2010. The Verification and Validation (V&V) testing was completed 26 November 2010. The DISA CA has reviewed the IA Assessment Report for the SUT, Reference (f), and based on the findings in the report has provided a positive recommendation. The

acquiring agency or site will be responsible for the DoD Information Assurance Certification and Accreditation Process (DIACAP) accreditation. The JITC certifies the SUT as meeting the UCR for MFSS requirements. Enclosure 2 documents the test results and describes the tested network and system configurations including specified patch releases.

4. The interface, Capability Requirements (CR) and Functional Requirements (FR), and component status of the SUT is listed in Tables 1 and 2. The threshold Capability/Functional requirements for MFSSs are established by Sections 5.3.2, 5.3.4, 5.3.5, and 5.4 of Reference (c) and were used to evaluate the interoperability of the SUT.

Table 1. SUT Interface Interoperability Status

Interface	Critical	UCR Reference	Threshold CR/FR Requirements (See note 1.)	Status	Remarks (See note 2.)
MFS CS2100 Line Interfaces					
10Base-X	No	UCR 2008 Section 5.2	Refer to the Avaya MFS CS2100 XACORE with Release SE09.1 Special Interoperability Certification Letter and Test Summary Report Listed on the UC APL.	Certified	Refer to the Avaya MFS CS2100 XACORE with Release SE09.1 Special Interoperability Certification Letter and Test Summary Report Listed on the UC APL.
100Base-X	No			Certified	
1000Base-X	No			Not Tested	
2-wire analog	Yes			Certified	
2-Wire Digital Proprietary	No			Certified	
ISDN BRI U and ST	Yes			Certified	
MFS CS2100 External Interfaces					
ISDN T1 PRI ANSI T1.619a	Yes	UCR 2008 Section 5.2	Refer to the Avaya MFS CS2100 XACORE with Release SE09.1 Special Interoperability Certification Letter and Test Summary Report Listed on the UC APL.	Certified	Refer to the Avaya MFS CS2100 XACORE with Release SE09.1 Special Interoperability Certification Letter and Test Summary Report Listed on the UC APL.
ISDN T1 PRI NI-2	Yes			Certified	
T1 CCS7 ANSI T1.619a	Yes			Certified	
E1 CCS7 ANSI T1.619a	No (See note 3.)			Certified	
T1 CAS (DTMF, DP, MFR1)	Yes			Certified	
E1 CAS (DTMF, MFR1)	No (See note 3.)			Certified	
E1 PRI ITU-T Q.955.3	Yes (See notes 3& 4.)			Certified	
E1 PRI ITU-T Q.931	No (See notes 3 & 4.)			Certified	
SONET OC-3	No (See note 3.)			Certified	
MFS CS2100 NM Interfaces					
10Base-X	No (See note 5 & 6.)	UCR 2008 Section 5.2	Refer to the Avaya MFS CS2100 XACORE with Release SE09.1 Special Interoperability Certification Letter and Test Summary Report Listed on the UC APL	Certified	Refer to the Avaya MFS CS2100 XACORE with Release SE09.1 Special Interoperability Certification Letter and Test Summary Report Listed on the UC APL.
100Base-X	No (See note 5 & 6.)			Certified	
EIA-232 Serial	No (See note 6.)			Certified	

Table 1. SUT Interface Interoperability Status (continued)

Interface	Critical	UCR Reference	Threshold CR/FR Requirements (See note 1.)	Status	Remarks (See note 2.)
AS5300 Line Interfaces					
10Base-X	Yes	5.3.2.6.3	2, 4, 10, 13, 16	Certified	Met threshold CRs/FRs for IEEE 802.3i and 802.3j. Applies to PEIs (voice) and Softphones (voice and video).
100Base-X	Yes	5.3.2.6.3	2, 4, 10, 13, 16	Certified	Met threshold CRs/FRs for IEEE 802.3u. Applies to PEIs (voice) and Softphones (voice and video).
1000Base-X	No	5.3.2.6.3	2, 4, 10,13, 16	Not Tested	This interface is not offered by the SUT PEIs.
2-wire analog	Yes	5.3.2.6.1.6	2, 4, 10, 13,	Certified	Met threshold CRs/FRs for 2-wire analog instruments. Applies to 2-wire analog secure and non-secure analog instruments. Requirement met through use of an IAD that supports IEEE 802.3i, 802.3u, and 802.3ab.
AS5300 External Interfaces					
10Base-X	No (See note 6.)	5.3.2.4.2	1, 2, 3, 6, 7, 8, 10, 11, 13, 15, 16	Certified	Met threshold CRs/FRs for IEEE 802.3i and 802.3j. Applies to AS-SIP trunk.
100Base-X	No (See note 6.)	5.3.2.4.2	1, 2, 3, 6, 7, 8, 10, 11, 13, 15, 16	Certified	Met threshold CRs/FRs for IEEE 802.3u. Applies to AS-SIP trunk.
1000Base-X	No (See note 6.)	5.3.2.4.2	1, 2, 3, 6, 7, 8, 10, 11, 13, 15, 16	Certified	Met threshold CRs/FRs for IEEE 802.3z and 802.3ab. Applies to AS-SIP trunk.
ISDN T1 PRI ANSI T1.619a	Yes	5.3.2.4.3	2, 3, 7, 8, 10, 13	Certified	Met threshold CRs/FRs . Provides legacy DSN and TELEPORT connectivity.
ISDN T1 PRI NI-2	Yes	5.3.2.4.3	2, 3, 7, 8, 10, 13	Certified	Met threshold CRs/FRs. Provides PSTN Connectivity.
NM					
10Base-X	No (See note 6.)	5.3.2.4.4 5.3.2.7.2.8	16, 17	Certified	Met threshold CRs/FRs. Verified via LoC.
100Base-X	No (See note 6.)	5.3.2.4.4 5.3.2.7.2.8	16, 17	Certified	Met threshold CRs/FRs. Verified via LoC.

NOTES:
1. CR/FR requirements are contained in Table 2. CR/FR numbers represent a roll-up of UCR requirements. Enclosure 3 provides a list of detailed requirements.
2. Paragraph 11 of Enclosure 2 provides detailed information pertaining to open TDRs and associated operational impacts.
3. The interface is conditionally required for deployment in Europe.
4. This interfaces is provided by an Avaya Option 11C PBX1 which is optionally required if the SUT is deployed in Europe.
5. The IEEE 802.3u interface for NM is certified to ADIMSS only.
6. Must provide a minimum of one of the listed interfaces.

Table 1. SUT Interface Interoperability Status (continued)

LEGEND:

ANSI	American National Standards Institute	ISDN	Integrated Services Digital Network
ASD NII	Assistant Secretary of Defense for Networks and Information Integration	ITU-T	International Telecommunications Union – Telecommunication Standardization Sector
BRI	Basic Rate Interface	LoC	Letter of Compliance
CAS	Channel Associated Signaling	NI-2	National ISDN-2
CCS7	Common Channel Signaling 7	NM	Network Management
CR	Capability Requirement	PEI	Proprietary End Instrument
E1	2048 Mbps European trunk standard	PRI	Primary Rate Interface
FR	Functional Requirement	SUT	System Under Test
IAD	Integrated Access Device	T1	1.544 Mbps North American trunk standard
ID	Identification	TDR	Test Discrepancy Report
IEEE	Institute of Electrical and Electronics Engineers	UCR	Unified capabilities Requirements

Table 2. SUT Capability Requirements and Functional Requirements Status

CR/FR ID	Capability/ Function	Applicability (See note 1.)	UCR Reference	Status	Remarks
1	**Assured Services Product Features and Capabilities**				
	DSCP Packet Marking	Required	5.3.2.2.1.4	Met	
	Voice Features and Capabilities	Required	5.3.2.2.2.1	Partially Met	See note 2.
	Public Safety Features	Required	5.3.2.2.2.2	Met	
	ASAC – Open Loop	Required	5.3.2.2.2.3	Met	
	Signaling Protocols	Required	5.3.2.2.3	Met	
	Signaling Performance	Conditional	5.3.2.2.4	Met	
2	**Registration, Authentication, and Failover**				
	Registration	Required	5.3.2.3.1	Met	
	Failover	Required	5.3.2.3.2	Met	
3	**Product Physical, Quality, and Environmental Factors**				
	Availability	Required	5.3.2.5.2.1	Met	
	Maximum Downtimes	Required	5.3.2.5.2.2	Met	
	Loss of Packets	Required (See note 3.)	5.3.2.5.4	Met	
4	**Voice End Instruments**				
	Tones and Announcements	Required	5.3.2.6.1.1	Partially Met	See notes 2 and 4.
	Audio Codecs	Required	5.3.2.6.1.2	Partially Met	See note 4.
	VoIP PEI or AEI Audio Performance	Required	5.3.2.6.1.3	Partially Met	See note 4.
	VoIP Sampling Standard	Required	5.3.2.6.1.4	Partially Met	See note 4.
	Authentication to LSC	Required	5.3.2.6.1.5	Partially Met	See note 4.
	Analog Telephone Support	Required (See note 5.)	5.3.2.6.1.6	Partially Met	See notes 4 and 6.
	Softphones	Conditional	5.3.2.6.1.7	Partially Met	See notes 4 and 7.
	ISDN BRI	Conditional	5.3.2.6.1.8	Not Tested	

Table 2. SUT Capability Requirements and Functional Requirements Status (continued)

CR/FR ID	Capability/ Function	Applicability (See note 1.)	UCR Reference	Status	Remarks
5	**Video End Instruments**				
	Video End Instrument	Required	5.3.2.6.2	Partially Met	See note 8.
	Display Messages, Tones, and Announcements	Required	5.3.2.6.2.1	Partially Met	See note 8.
	Video Codecs (Including Associated Audio Codecs)	Required	5.3.2.6.2.2	Partially Met	See note 8.
6	**MFSS Requirements**				
	TDM Side EO and Tandem Requirements	Required	5.3.2.8.2.1	Met	See note 9.
	MFSS Signaling Interfaces	Required	5.3.2.8.2.3	Met	
	SG and MG Requirements for Interactions between the TDM and SS Side of the MFSS	Required	5.3.2.8.2.4	Met	
	Features of the SS Side of the MFSS	Required	5.3.2.8.2.6	Met	
	ASAC Requirements for the MFSS Related to Voice and Video	Required	5.3.2.8.2.7	Met	
7	**Call Connection Agent Requirements**				
	CCA IWF Component	Required	5.3.2.9.2.1	Met	
	CCA MGC Component	Required	5.3.2.9.2.2	Met	
	SG Component	Conditional	5.3.2.9.2.3	Not Tested	
	CCA-IWF Support for AS-SIP	Required	5.3.2.9.5.1	Met	
	CCA-IWF Support for SS7	Conditional	5.3.2.9.5.2	Met	See note 9.
	CCA-IWF Support for PRI via MG	Required	5.3.2.9.5.3	Met	
	CCA-IWF Support for CAS Trunks via MG	Conditional	5.3.2.9.5.4	Met	See note 9.
	CCA-IWF Support for PEI and AEI Signaling Protocols	Required	5.3.2.9.5.5	Partially Met	See note 10.
	CCA-IWF Support for VoIP and TDM Protocol Interworking	Required	5.3.2.9.5.6	Met	.
	CCA Preservation of Call Ringing State during Failure Conditions	Required	5.3.2.9.6	Not Met	See note 3.
	CCA Interactions with Transport Interface Functions	Required	5.3.2.10.3	Met	
	CCA Interactions with the EBC	Required	5.3.2.10.4	Met	
	CCA Support for Admission Control	Required	5.3.2.10.5	Met	
	CCA Support for UFS	Required	5.3.2.10.6	Met	
	CCA Support for IA	Required	5.3.2.10.7	Met	
	CCA Interaction with EIs	Required	5.3.2.10.10	Partially Met	See notes 7 and 8.
	CCA Support for AS Voice and Video	Required	5.3.2.10.11	Partially Met	See notes 7 and 8.
	CCA Interactions with Service control Functions	Required	5.3.2.10.12	Met	
	CCA Interworking between AS-SIP and SS7	Conditional	5.3.2.11	Met	See note 9.

Table 2. SUT Capability Requirements and Functional Requirements Status (continued)

CR/FR ID	Capability/ Function	Applicability (See note 1.)	UCR Reference	Status	Remarks
8	**MG Requirements**				
	Role of MG In MFSS	Required	5.3.2.12.3.2	Met	
	MG Support for ASAC	Required	5.3.2.12.4.1	Met	
	MG and IA Functions	Required	5.3.2.12.4.2	Met	
	MG Interaction with Service Control Function	Required	5.3.2.12.4.3	Met	
	MG Interactions with IP Transport Interface Functions	Required	5.3.2.12.4.4	Met	
	MG-EBC interactions	Required	5.3.2.12.4.5	Met	
	MG IP-Based PSTN Interface Requirements	Conditional	5.3.2.12.4.7	Not Tested	
	MG Interaction with EIs	Required	5.3.2.12.4.8	Met	Applies to analog EIs.
	MG support for User Features and Services	Required	5.3.2.12.4.9	Met	
	MG Interface to TDM	Required	5.3.2.12.5	Met	See note 9.
	MG Interface to TDM Allied and Coalition	Conditional	5.3.2.12.6	Not Tested	
	MG Interface to TDM PSTN in US	Required	5.3.2.12.7	Met	See note 9.
	MG Interfaces to TDM PSTN OCONUS	Required	5.3.2.12.8	Met	See note 9.
	MG Support for CCS7	Conditional	5.3.2.12.9	Met	See note 9.
	MG Support for ISDN PRI Trunks	Required	5.3.2.12.10	Met	
	MG Support for CAS Trunks	Conditional	5.3.2.12.11	Met	See note 9.
	MG requirements for VoIP Internal Interfaces	Required	5.3.2.12.12	Met	
	MG Echo Cancellation	Required	5.3.2.12.13	Met	
	MG Clock Timing	Required	5.3.2.12.14	Met	
	MGC-MG CCA Functions	Required	5.3.2.12.15	Met	
	MG V.150.1	Required	5.3.2.12.16	Not Tested	See note 6.
	MG Preservation of Call Ringing during Failure	Required	5.3.2.12.17	Not Met	See note 3.
9	**SG Requirements**				
	SG and CCS7 network Interactions	Conditional	5.3.2.13.5.1	Not Tested	
	SG Interactions with CCA	Conditional	5.3.2.13.5.2	Not Tested	
	SG Interworking Functions	Conditional	5.3.2.13.5.3	Not Tested	
10	**WWNDP Requirements**				
	WWNDP	Required	5.3.2.16	Met	
	DSN WWNDP	Required	5.3.2.16.1	Met	

Table 2. SUT Capability Requirements and Functional Requirements Status (continued)

CR/FR ID	Capability/ Function	Applicability (See note 1.)	UCR Reference	Status	Remarks
11	**Commercial Cost Avoidance**				
	Commercial Cost Avoidance	Required	5.3.2.23	Partially Met	See note 11
12	**AS-SIP Based for External Devices (Voicemail, Unified Messaging, and Automated Receiving Devices)**				
	AS-SIP Requirements for External Interfaces	Conditional	5.3.2.24	Not Tested	
13	**Precedence Call Diversion**				
	Precedence Call Diversion	Required	5.3.2.25	Met	
14	**Attendant Station Features**				
	Precedence and Preemption	Required (See note 3.)	5.3.2.26.1	Met	
	Call Display	Required (See note 3.)	5.3.2.26.2	Met	
	Class of Service Override	Required (See note 3.)	5.3.2.26.3	Met	
	Busy Override and Busy Verification	Required (See note 3.)	5.3.2.26.4	Met	
	Night service	Required (See note 3.)	5.3.2.26.5	Met	
	Automatic Recall of Attendant	Required (See note 3.)	5.3.2.26.6	Met	
	Calls in Queue to the Attendant	Required (See note 3.)	5.3.2.26.7	Met	
15	**AS-SIP Requirements**				
	SIP Requirements for AS-SIP Signaling Appliances and AS-SIP EIs	Required (See note 3.)	5.3.4.7	Not Tested	See note 4.
	SIP Session Keep-Alive Timer	Required	5.3.4.8	Met	
	Session Description Protocol	Required	5.3.4.9	Met	
	Precedence and Preemption	Required	5.3.4.10	Met	
	Video Telephony – General Rules	Required	5.3.4.12	Partially Met	See note 8.
	Calling Services	Required	5.3.4.13	Met	
	SIP Translation Requirements for Inter-working AS-SIP Signaling Appliances	Required	5.3.4.14	Partially Met	
	Relevant Timers for the Terminating Gateway and the Originating Gateway	Required	5.3.4.15	Met	
	SIP Requirements for Interworking AS-SIP Signaling Appliances	Required	5.3.4.16	Met	
	Keep-Alive Timer Requirements for Interworking AS-SIP Signaling Appliances	Required	5.3.4.17	Met	
	Precedence and Preemption Extensions for Interworking AS-SIP Signaling Appliances	Required	5.3.4.18	Met	
	Supplementary Services	Required	5.3.4.19	Met	
16	**IPv6 Requirements**				
	Product Requirements	Required	5.3.5.4	Partially Met	See note 11.
17	**NM**				
	Network Management Requirements for the MFSS	Required	5.3.2.8.3	Partially Met	See note 12.
	VVoIP NMS Interface Requirements	Required	5.3.2.4.4	Partially Met	See note 12.
	General Management requirements	Required	5.3.2.17.2	Partially Met	See note 12.
	Requirement for FCAPS Management	Required	5.3.2.17.3	Partially Met	See notes 12. and 13.
	NM requirements of Appliance Functions	Required	5.3.2.18	Partially Met	See note 12.
	Accounting Management	Required	5.3.2.19	Partially Met	See note 12.

Table 2. SUT Capability Requirements and Functional Requirements Status (continued)

NOTES:
1. The annotation of 'required' refers to the high-level requirement category. The applicability of each sub-requirement is provided in Enclosure 3.
2. The SUT had outstanding open TDRs at the completion of testing, which were adjudicated by DISA to have a minor operational impact. The vendor has submitted a PoAM to address the open TDRs. Reference (f), Enclosure 2, Paragraph 11, provides additional details.
3. This requirement represents a new UCR requirement and the vendor has 18-months (until July 2011) to comply.
4. The SUT met the requirement for PEIs; SUT was not tested with generic AEI requirements because no AEI was provided. AEIs are a new UCR 2008, Change 1, requirement and the vendor has 18-months (until July 2011) to comply.
5. The UCR 2008, Change 1, added V.150.1 IAD support. Since this is a new requirement, the vendor has 18 months (until July 2011) to comply.
6. The vendor did not demonstrate V.150.1 support. Since this is a new requirement, the vendor has 18 months (until July 2011) to comply.
7. The SUT met both voice and video requirements via Softphone.
8. The SUT demonstrated video requirements via Softphone only, not PEIs (Proprietary Hard Video Phones). The vendor did not provide a PEI video capability. This was adjudicated by DISA to have a minor operational impact because of the limited deployment of PEIs with video.
9. This capability was provided by the MFS (CS2100) portion of the SUT.
10. The SUT met PEI CCA-IWF requirements. The AEI CCA-IWF requirements were not tested. Since these are new requirements, the vendor has 18 months (until July 2011) to comply.
11. The vendor submitted an IPv6 LoC with noted discrepancies, which include the interface for Commercial Cost Avoidance functionality. The open TDRs were adjudicated by DISA to have a minor operational impact with a vendor submitted PoAM.
12. The vendor submitted a NM LoC with noted discrepancies. The open TDRs were adjudicated by DISA to have a minor operational impact with a vendor submitted PoAM.
13. The SUT does not support destination code controls. This was adjudicated by DISA to have a minor operational impact because of the limited deployment of users.

LEGEND:

AEI	AS-SIP End Instrument
AS	Assured Services
ASAC	Assured Services Admission Control
AS-SIP	Assured Services Session Initiation Protocol
BRI	Basic Rate Interface
CAS	Channel Associated Signaling
CCA	Call Connection Agent
CCS7	Common Channel Signaling 7
CR	Capabilities Requirement
DSCP	Differentiated Services Code Point
DSN	Defense Switched Network
EBC	Edge Boundary Controller
EI	End Instrument
FCAPS	Fault, Configuration, Accounting, Performance, and Security
FR	Functional Requirement
IA	Information Assurance
IAD	Integrated Access Device
ID	Identification
IP	Internet Protocol
IPv6	Internet Protocol version 6
ISDN	Integrated Services Digital Network
IWF	Interworking Function
LoC	Letter of Compliance
MFSS	Multifunction Softswitch
MG	Media Gateway
MGC	Media Gateway Controller
NM	Network Management
NMS	Network Management System
OCONUS	Outside the Continental United States
PBAS	Precedence-Based Assured Service
PEI	Proprietary End Instrument
PoAM	Plan of Actions and Milestones
PRI	Primary Rate Interface
PSTN	Public Switch Telephone Network
SG	Signaling Gateway
SIP	Session Initiation Protocol
SS7	Signaling System Number 7
SUT	System Under Test
T1	1.544 Mbps North American trunk standard
TDM	Time Division Multiplexing
TDR	Test Discrepancy Report
UCR	Unified Capabilities Requirements
UFS	User Features and Services
VoIP	Voice over Internet Protocol
VVoIP	Voice and Video over Internet Protocol
WAN	Wide Area Network
WWNDP	World Wide Numbering and Dialing Plan

5. No detailed test report was developed in accordance with the Program Manager's request. JITC distributes interoperability information via the JITC Electronic Report Distribution (ERD) system, which uses Unclassified-But-Sensitive Internet Protocol Router Network (NIPRNet) e-mail. More comprehensive interoperability status information is available via the JITC System Tracking Program (STP). The STP is accessible by .mil/gov users on the NIPRNet at https://stp.fhu.disa.mil. Test reports, lessons learned, and related testing documents and references are on the JITC Joint Interoperability Tool (JIT) at https://jit.fhu.disa.mil (NIPRNet). Information related to DSN testing is on the Telecom Switched Services Interoperability (TSSI)

website at http://jitc.fhu.disa.mil/tssi. All associated data is available on the Defense Information Systems Agency Unified Capability Coordination Office (UCCO) website located at http://www.disa.mil/ucco/.

6. The JITC point of contact is Stephane Arsenault, JITC, commercial (520) 538-5269 or DSN 312-879-5269; e-mail address is Stephane.Arsenault@ disa.mil. The JITC's mailing address is P.O. Box 12798, Fort Huachuca, AZ 85670-2798. The UCCO tracking number is 0903501.

FOR THE COMMANDER:

3 Enclosures a/s

for BRADLEY A. CLARK
Chief
Battlespace Communications Portfolio

JITC Memo, JTE, Special Interoperability Test Certification of the Avaya CS2100 XA-Core SE09.1 - Aura™ AS5300 Version 2.0 Multifunction Softswitch (MFSS) (with specified patch releases)

Distribution (electronic mail):
Joint Staff J-6
Joint Interoperability Test Command, Liaison, TE3/JT1
Office of Chief of Naval Operations, CNO N6F2
Headquarters U.S. Air Force, Office of Warfighting Integration & CIO, AF/XCIN (A6N)
Department of the Army, Office of the Secretary of the Army, DA-OSA CIO/G-6 ASA (ALT), SAIS-IOQ
U.S. Marine Corps MARCORSYSCOM, SIAT, MJI Division I
DOT&E, Net-Centric Systems and Naval Warfare
U.S. Coast Guard, CG-64
Defense Intelligence Agency
National Security Agency, DT
Defense Information Systems Agency, TEMC
Office of Assistant Secretary of Defense (NII)/DOD CIO
U.S. Joint Forces Command, Net-Centric Integration, Communication, and Capabilities Division, J68
Defense Information Systems Agency, GS23

ADDITIONAL REFERENCES

(c) Office of the Assistant Secretary of Defense, "Department of Defense Unified Capabilities Requirements 2008, Change 1," 22 January 2010
(d) Office of the Assistant Secretary of Defense, "Department of Defense Unified Capabilities Requirements 2008, Section 5.2," 22 January 2009
(e) Joint Interoperability Test Command, "Unified Capabilities Test Plan (UCTP)," Draft
(f) Joint Interoperability Test Command, "Information Assurance (IA) Assessment of Avaya Aura™ CS2100 XA-Core SE09.1 w/AS5300 Version 2.0 MFSS (TN 0903501)," 25 March 2011

(This page left intentionally blank).

CERTIFICATION TESTING SUMMARY

1. SYSTEM TITLE. The CS2100 XA-Core SE09.1 with Aura™ AS5300 Version 2.0 Multifunction Softswitch (MFSS) (with specified patch releases) hereinafter referred to the System Under Test (SUT).

2. SPONSOR. Defense Information Systems Agency, Attention: Louis Schmuckler GS15, Capability Center, IP Division Chief, GS23, PO Box 4502, Arlington VA, 22204-4502, Phone 703-882-0274, e-mail: louis.schmuckler@disa.mil.

3. SYSTEM POC. Avaya Government Solutions, Attention: Scott Birdzell, Address: 12730 Fair Lakes Circle, Fairfax, VA, 22033-4901, Phone: 480-282-1066, e-mail: Scott.Birdzell@avayagov.com.

4. TESTER. Joint Interoperability Test Command (JITC), Fort Huachuca, Arizona.

5. SYSTEM DESCRIPTION. The SUT is a Multi-Function Soft Switch (MFSS), which includes a legacy Multi-Function Switch, Softswitch and Local Session Controller (LSC). The LSC is an AS5300 which is comprised of four elements and a Telecommunication Management System (TMS). It is designed to carry out call control intelligence, call switching, and connectivity functions. The Switch Expert monitors multiple Network Elements (NE) in real-time and provides point and click access to call detail records, system events, and traffic analysis reports. The system provides secure Assured Services Session Initiation Protocol (AS-SIP) multimedia client applications and services, with scalable networking, trunking, and routing through the Assured Services Local Area Network (ASLAN) to an existing analog or digital framework. In addition, the AS5300 solution can be deployed into standalone Internet Protocol (IP) environments, which extend AS-SIP multimedia applications to users. Services that are included are: instant messaging (IM), presence, voice, video calling, internal voicemail, audio ad hoc conferencing, audio meet me conferencing, Messaging Application Server (MAS)-Music on Hold (MOH), and MAS-Unified Communications (UCOMM).

6. OPERATIONAL ARCHITECTURE. Figure 2-1 depicts the MFSS functional model and Figure 2-2 the notional operational architecture that the SUT may be used in.

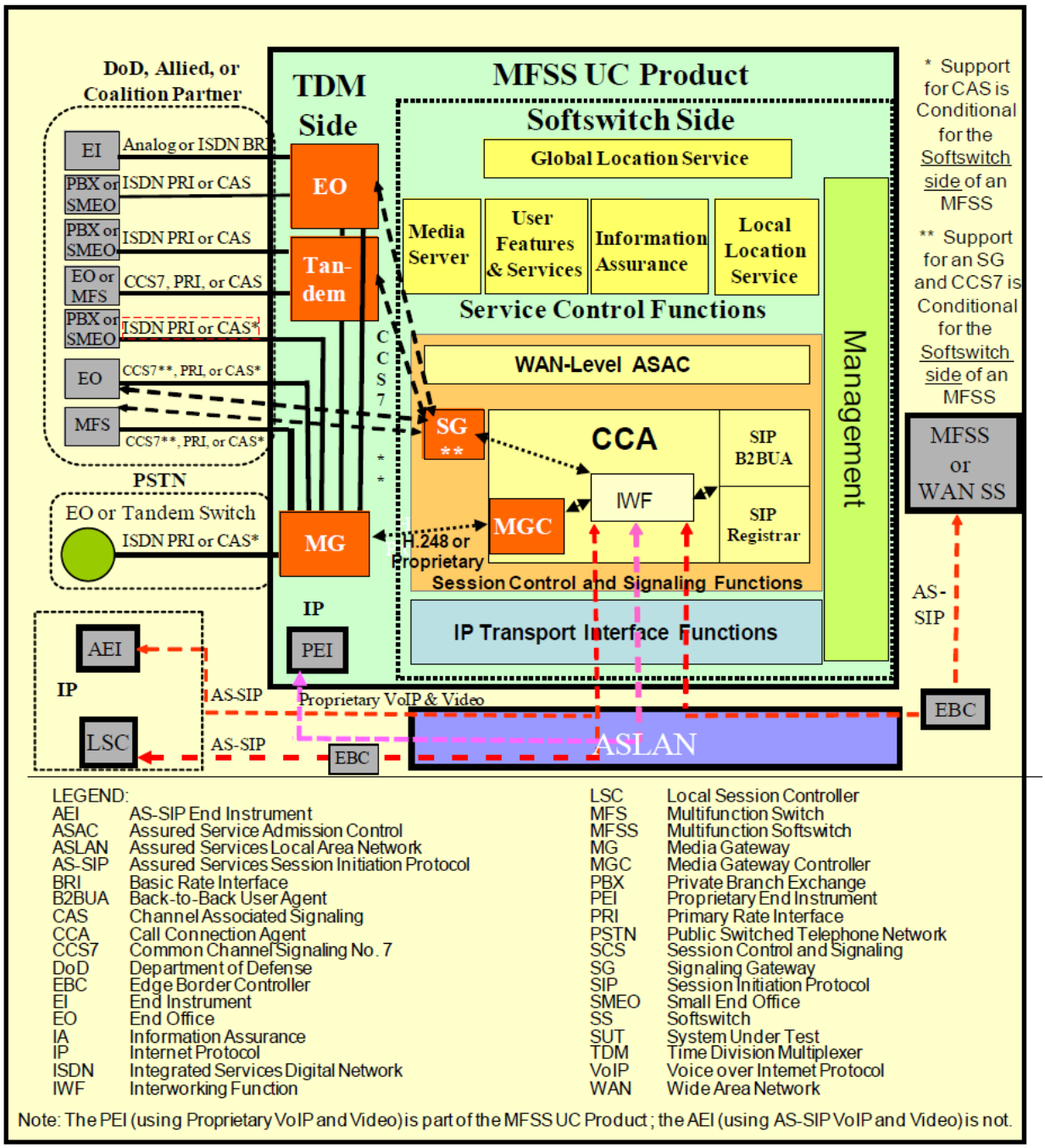

LEGEND:

AEI	AS-SIP End Instrument
ASAC	Assured Service Admission Control
ASLAN	Assured Services Local Area Network
AS-SIP	Assured Services Session Initiation Protocol
BRI	Basic Rate Interface
B2BUA	Back-to-Back User Agent
CAS	Channel Associated Signaling
CCA	Call Connection Agent
CCS7	Common Channel Signaling No. 7
DoD	Department of Defense
EBC	Edge Border Controller
EI	End Instrument
EO	End Office
IA	Information Assurance
IP	Internet Protocol
ISDN	Integrated Services Digital Network
IWF	Interworking Function
LSC	Local Session Controller
MFS	Multifunction Switch
MFSS	Multifunction Softswitch
MG	Media Gateway
MGC	Media Gateway Controller
PBX	Private Branch Exchange
PEI	Proprietary End Instrument
PRI	Primary Rate Interface
PSTN	Public Switched Telephone Network
SCS	Session Control and Signaling
SG	Signaling Gateway
SIP	Session Initiation Protocol
SMEO	Small End Office
SS	Softswitch
SUT	System Under Test
TDM	Time Division Multiplexer
VoIP	Voice over Internet Protocol
WAN	Wide Area Network

Note: The PEI (using Proprietary VoIP and Video) is part of the MFSS UC Product; the AEI (using AS-SIP VoIP and Video) is not.

Figure 2-1. MFSS Functional Reference Model

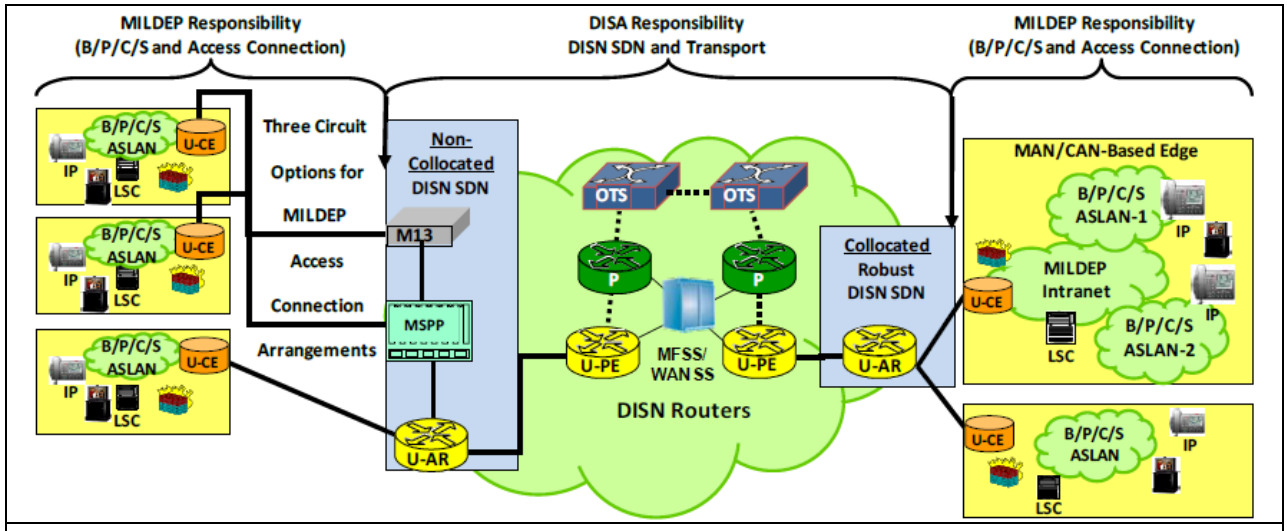

LEGEND:

ASLAN	Assured Services Local Area Network	MILDEP	Military Department
B/P/C/S	Base, Post, Camp, Station	MSPP	Multi-Service Provisioning Platform
CAN	Campus Area Network	OTS	Optical Transport System
DISA	Defense Information Systems Agency	P	Provider
DISN	Defense Information System Network	SDN	Service Delivery Node
IP	Internet Protocol	SS	Softswitch
LSC	Local Session Controller	U-AR	Unclassified Aggregation Router
M13	Multiplexer	U-CE	Unclassified Customer Edge Router
MAN	Metropolitan Area Network	U-PE	Unclassified Provider Edge Router
MFSS	Multifunction Softswitch	WAN	Wide Area Network

Figure 2-2. UC Network Architecture

7. INTEROPERABILITY REQUIREMENTS. The interface, Capability Requirements (CR) and Functional Requirements (FR), Information Assurance (IA), and other requirements for MFSSs are established by Sections 5.3.2, 5.3.4, 5.3.5, and 5.4 of Reference (c).

7.1 Interfaces. The Avaya SUT uses the external interfaces to connect to the Global Information Grid (GIG) network and other Unified Capabilities products. Table 2-1, shows the physical interfaces supported by the SUT. The table documents the physical interfaces and the associated standards.

Table 2-1. MFSS Interface Requirements

Interface	Critical	UCR Reference	Criteria	Remarks
MFS CS2100 Line Interfaces				
10Base-X	No	UCR 2008 Section 5.2	Refer to the Avaya MFS CS2100 XACORE with Release SE09.1 Special Interoperability Certification Letter and Test Summary Report Listed on the UC APL.	
100Base-X	No			
1000Base-X	No			
2-wire analog	Yes			

Table 2-1. MFSS Interface Requirements (continued)

Interface	Critical	UCR Reference	Criteria	Remarks
MFS CS2100 Line Interfaces (continued)				
2-Wire Digital Proprietary	No	UCR 2008 Section 5.2	Refer to the Avaya MFS CS2100 XACORE with Release SE09.1 Special Interoperability Certification Letter and Test Summary Report Listed on the UC APL.	
ISDN BRI U and ST	Yes			
MFS CS2100 External Interfaces				
ISDN T1 PRI ANSI T1.619a	Yes	UCR 2008 Section 5.2	Refer to the Avaya MFS CS2100 XACORE with Release SE09.1 Special Interoperability Certification Letter and Test Summary Report Listed on the UC APL.	
ISDN T1 PRI NI-2	Yes			
T1 CCS7 ANSI T1.619a	Yes			
E1 CCS7 ANSI T1.619a	No (See note 3.)			
T1 CAS (DTMF, DP, MFR1)	Yes			
E1 CAS (DTMF, MFR1)	No (See note 3.)			
E1 PRI ITU-T Q.955.3	Yes (See notes 3& 4.)			
E1 PRI ITU-T Q.931	No (See notes 3 & 4.)			
SONET OC-3	No (See note 3.)			
MFS CS2100 NM Interfaces				
10Base-X	No (See note 5 & 6.)	UCR 2008 Section 5.2	Refer to the Avaya MFS CS2100 XACORE with Release SE09.1 Special Interoperability Certification Letter and Test Summary Report Listed on the UC APL	.
100Base-X	No (See note 5 & 6.)			
EIA-232 Serial	No (See note 6.)			
AS5300 Line Interfaces				
10Base-X	Yes	5.3.2.6.3	Support minimum threshold CRs/FRs (2, 4,10, 13, and 16) and meet interface criteria for 802.3i and 802.3j	
100Base-X	Yes	5.3.2.6.3	Support minimum threshold CRs/FRs (2, 4,10, 13, and 16) and meet interface criteria for 802.3.u	
1000Base-X	No	5.3.2.6.3	Support minimum threshold CRs/FRs (2, 4, 10, 13, and 16) and meet interface criteria for 802.3z.	
2-wire analog	Yes	5.3.2.6.1.6	Support minimum threshold CRs/FRs (2, 4, 10, and 13) and meet interface criteria for analog.	
AS5300 External Interfaces				
10Base-X	No (See note 6.)	5.3.2.4.2	Support minimum threshold CRs/FRs (1, 2, 3, 6, 7, 8, 10, 11, 13, 15, and 16) and meet interface criteria for 802.3i and 802.3j	
100Base-X	No (See note 6.)	5.3.2.4.2	Support minimum threshold CRs/FRs (1, 2, 3, 6, 7, 8, 10, 11, 13, 15, and 16) and meet interface criteria for 802.3u	
1000Base-X	No (See note 6.)	5.3.2.4.2	Support minimum threshold CRs/FRs (1, 2, 3, 6, 7, 8, 10, 11, 13, 15, and 16)and meet interface criteria for 802.3z	
ISDN T1 PRI ANSI T1.619a	Yes	5.3.2.4.3	Support minimum threshold CRs/FRs (2, 3, 7, 8, 10, and 13) and meet interface criteria for ISDN T1 PRI (T1.619a)	Provides legacy DSN and TELEPORT connectivity.
ISDN T1 PRI NI-2	Yes	5.3.2.4.3	Support minimum threshold CRs/FRs (2, 3, 7, 8, 10, and 13)and meet interface criteria for ISDN T1 PRI (NI-2)	Provides PSTN Connectivity.

Table 2-1. MFSS Interface Requirements (continued)

NM				
10Base-X	No (See note 6.)	5.3.2.4.4 5.3.2.7.2.8	Support minimum threshold CR/FRs (16 and 17) and meet interface criteria for 802.3i and 802.3j	
100Base-X	No (See note 6.)	5.3.2.4.4 5.3.2.7.2.8	Support minimum threshold CR/FRs (16 and 17) and meet interface criteria for 802.3u	

NOTES:
1. CR/FR requirements are contained in Table 2. CR/FR numbers represent a roll-up of UCR requirements. Enclosure 3 provides a list of detailed requirements.
2. Paragraph 11 of Enclosure 2 provides detailed information pertaining to open TDRs and associated operational impacts.
3. The interface is conditionally required for deployment in Europe.
4. This interfaces is provided by an Avaya Option 11C PBX1 which is optionally required if the SUT is deployed in Europe.
5. The IEEE 802.3u interface for NM is certified to ADIMSS only.
6. Must provide a minimum of one of the listed interfaces.

LEGEND:

ANSI	American National Standards Institute	ISDN	Integrated Services Digital Network
ASD NII	Assistant Secretary of Defense for Networks and Information Integration	ITU-T	International Telecommunications Union – Telecommunication Standardization Sector
BRI	Basic Rate Interface	LoC	Letter of Compliance
CAS	Channel Associated Signaling	NI-2	National ISDN-2
CCS7	Common Channel Signaling 7	NM	Network Management
CR	Capability Requirement	PEI	Proprietary End Instrument
E1	2048 Mbps European trunk standard	PRI	Primary Rate Interface
FR	Functional Requirement	SUT	System Under Test
IAD	Integrated Access Device	T1	1.544 Mbps North American trunk standard
ID	Identification	TDR	Test Discrepancy Report
IEEE	Institute of Electrical and Electronics Engineers	UCR	Unified capabilities Requirements

7.2 Capability Requirements (CR) and Functional Requirements (FR). The MFSSs have required and conditional features and capabilities that are established by Sections 5.3.2, 5.3.4, 5.3.5, and 5.4 of the UCR. The SUT does not need to provide non-critical (conditional) requirements. If they are provided, they must function according to the specified requirements. The SUTs features and capabilities and its aggregated requirements are listed in Table 2-2. Detailed CR/FR requirements are provided in Table 3-1 of Enclosure 3.

Table 2-2. MFSS Capability Requirements and Functional Requirements

CR/FR ID	Capability/ Function	Applicability (See note 1.)	UCR Reference	Criteria
1	**Assured Services Product Features and Capabilities**			
	DSCP Packet Marking	Required	5.3.2.2.1.4	See note 2.
	Voice Features and Capabilities	Required	5.3.2.2.2.1	
	Public Safety Features	Required	5.3.2.2.2.2	
	ASAC – Open Loop	Required	5.3.2.2.3	
	Signaling Protocols	Required	5.3.2.2.2.3	
	Signaling Performance	Required	5.3.2.2.4	
2	**Registration, Authentication, and Failover**			
	Registration	Required	5.3.2.3.1	See note 2.
	Failover	Required	5.3.2.3.2	

Table 2-2. MFSS Capability Requirements and Functional Requirements (continued)

CR/FR ID	Capability/ Function	Applicability (See note 1.)	UCR Reference	Criteria
3	**Product Physical, Quality, and Environmental Factors**			
	Availability	Required	5.3.2.5.2.1	See note 2.
	Maximum Downtimes	Required	5.3.2.5.2.2	
	Loss of Packets	Required (See note 3.)	5.3.2.5.4	
4	**Voice End Instruments**			
	Tones and Announcements	Required	5.3.2.6.1.1	See note 2.
	Audio Codecs	Required	5.3.2.6.1.2	
	VoIP PEI or AEI Audio Performance	Required	5.3.2.6.1.3	
	VoIP Sampling Standard	Required	5.3.2.6.1.4	
	Authentication To LSC	Required	5.3.2.6.1.5	
	Analog Telephone Support	Required (See note 4.)	5.3.2.6.1.6	
	Softphones	Conditional	5.3.2.6.1.7	
	ISDN BRI	Conditional	5.3.2.6.1.8	
5	**Video End Instruments**			
	Video End Instrument	Required	5.3.2.6.2	See note 2.
	Display Messages, Tones, and Announcements	Required	5.3.2.6.2.1	
	Video Codecs (Including Associated Audio Codecs)	Required	5.3.2.6.2.2	
6	**MFSS Requirements**			
	TDM Side EO and Tandem Requirements	Required	5.3.2.8.2.1	See note 2.
	MFSS Signaling Interfaces	Required	5.3.2.8.2.3	
	SG and MG Requirements for Interactions between the TDM Side and SS Side of the MFSS	Required	5.3.28.2.4	
	Features of the SS Side of the MFSS	Required	5.3.2.8.2.6	
	ASAC Requirements for the MFSS Related to Voice and Video	Required	5.3.2.8.2.7	
7	**Call Connection Agent Requirements**			
	CCA IWF Component	Required (See note 5.)	5.3.2.9.2.1	See note 2.
	CCA MGC Component	Required (See note 5.)	5.3.2.9.2.2	
	SG Component	Conditional	5.3.2.9.2.3	
	CCA-IWF Support for AS-SIP	Required	5.3.2.9.5.1	
	CCA-IWF Support for SS7	Conditional	5.3.2.9.5.2	
	CCA-IWF Support for PRI via MG	Required	5.3.2.9.5.3	
	CCA-IWF Support for CAS Trunks via MG	Conditional	5.3.2.9.5.4	
	CCA-IWF Support for PEI and AEI Signaling Protocols	Required	5.3.2.9.5.5	
	CCA-IWF Support for VoIP and TDM Protocol Interworking	Required (See note 5.)	5.3.2.9.5.6	
	CCA Preservation of Call Ringing State during Failure Conditions	Required	5.3.2.9.6	
	CCA Interactions with Transport Interface Functions	Required	5.3.2.10.3	
	CCA Interactions with the EBC	Required	5.3.2.10.4	

Table 2-2. MFSS Capability Requirements and Functional Requirements (continued)

CR/FR ID	Capability/ Function	Applicability (See note 1.)	UCR Reference	Criteria
7	**Call Connection Agent Requirements (continued)**			
	CCA Support for Admission Control	Required	5.3.2.10.5	See note 2.
	CCA Support for UFS	Required	5.3.2.10.6	
	CCA Support for IA	Required	5.3.2.10.7	
	CCA Interaction with EIs	Required	5.3.2.10.10	
	CCA Support for AS Voice and Video	Required	5.3.2.10.11	
	CCA Interactions with Service control Functions	Required	5.3.2.10.12	
	CCA Interworking between AS-SIP and SS7	Conditional	5.3.2.11	
8	**MG Requirements**			
	Role of MG In MFSS	Required	5.3.2.12.3.2	See note 2.
	MG Support for ASAC	Required	5.3.2.12.4.1	
	MG and IA Functions	Required	5.3.2.12.4.2	
	MG Interaction with Service Control Function	Required	5.3.2.12.4.3	
	MG Interactions with IP Transport Interface Functions	Required	5.3.2.12.4.4	
	MG-EBC interactions	Required	5.3.2.12.4.5	
	MG IP-Based PSTN Interface Requirements	Conditional	5.3.2.12.4.7	
	MG Interaction with EIs	Required	5.3.2.12.4.8	
	MG support for User Features and Services	Required	5.3.2.12.4.9	
	MG Interface to TDM	Required (See note 6.)	5.3.2.12.5	
	MG Interface to TDM Allied and Coalition	Conditional	5.3.2.12.6	
	MG Interface to TDM PSTN in US	Required (See note 6.)	5.3.2.12.7	
	MG Interfaces to TDM PSTN OCONUS	Required (See notes 6 and 7.)	5.3.2.12.8	
	MG Support for CCS7	Conditional	5.3.2.12.9	
	MG Support for ISDN PRI Trunks	Required	5.3.2.12.10	
	MG Support for CAS Trunks	Required	5.3.2.12.11	
	MG requirements for VoIP Internal Interfaces	Required	5.3.2.12.12	
	MG Echo Cancellation	Required	5.3.2.12.13	
	MG Clock Timing	Required	5.3.2.12.14	
	MGC-MG CCA Functions	Required	5.3.2.12.15	
	MG V.150.1	Required (See note 3.)	5.3.2.12.16	
	MG Preservation of Call Ringing during Failure	Required (See note 3.)	5.3.2.12.17	
9	**SG Requirements**			
	SG and CCS7 network Interactions	Conditional	5.3.2.13.5.1	See note 2.
	SG Interactions with CCA	Conditional	5.3.2.13.5.2	
	SG Interworking Functions	Conditional	5.3.2.13.5.3	
10	**WWNDP Requirements**			
	DSN WWNDP	Required	5.3.2.16.1	

Table 2-2. MFSS Capability Requirements and Functional Requirements (continued)

CR/FR ID	Capability/ Function	Applicability (See note 1.)	UCR Reference	Criteria
11	**Commercial Cost Avoidance**			
	Commercial Cost Avoidance	Required (See note 3.)	5.3.2.23	See note 2.
12	**AS-SIP Based for External Devices (Voicemail, Unified Messaging, and Automated Receiving Devices)**			
	AS-SIP Requirements for External Interfaces	Conditional	5.3.2.24	See note 2.
13	**Precedence Call Diversion**			
	Precedence call Diversion	Required	5.3.2.25	See note 2.
14	**Attendant Station Features**			
	Precedence and Preemption	Required (See note 3.)	5.3.2.26.1	See note 2.
	Call Display	Required (See note 3.)	5.3.2.26.2	
	Class of Service Override	Required (See note 3.)	5.3.2.26.3	
	Busy Override and Busy Verification	Required (See note 3.)	5.3.2.26.4	
	Night service	Required (See note 3.)	5.3.2.26.5	
	Automatic Recall of Attendant	Required (See note 3.)	5.3.2.26.6	
	Calls in Queue to the Attendant	Required (See note 3.)	5.3.2.26.7	
15	**AS-SIP Requirements**			
	SIP Requirements for AS-SIP Signaling Appliances and AS-SIP EIs	Required (See note 3.)	5.3.4.7	See note 2.
	SIP Session Keep-Alive Timer	Required	5.3.4.8	
	Session Description Protocol	Required	5.3.4.9	
	Precedence and Preemption	Required	5.3.4.10	
	Video Telephony – General Rules	Required	5.3.4.12	
	Calling Services	Required	5.3.4.13	
	SIP Translation Requirements for Inter-working AS-SIP Signaling Appliances	Required	5.3.4.14	
	Relevant Timers for the Terminating Gateway and the Originating Gateway	Required	5.3.4.15	
	SIP Requirements for Interworking AS-SIP Signaling Appliances	Required	5.3.4.16	
	Keep-Alive Timer Requirements for Interworking AS-SIP Signaling Appliances	Required	5.3.4.17	
	Precedence and Preemption Extensions for Interworking AS-SIP Signaling Appliances	Required	5.3.4.18	
	Supplementary Services	Required	5.3.4.19	
16	**IPv6 Requirements**			
	Product Requirements	Required	5.3.5.4	See note 2.
17	**NM**			
	Network Management System Interface	Required	5.3.2.8.3.1	See note 2.
	VVoIP NMS Interface Requirements	Required	5.3.2.4.4	
	General Management requirements	Required	5.3.2.17.2	
	Requirement for FCAPS Management	Required	5.3.2.17.3	
	NM requirements of Appliance Functions	Required	5.3.2.18	
	Accounting Management	Required	5.3.2.19	

Table 2-2. MFSS Capability Requirements and Functional Requirements (continued)

NOTES:
1. Annotation of 'required' refers to high level requirement category. Applicability of each sub-requirement is provided in Enclosure 3.
2. Detailed requirements and associated criteria for MFSSs are listed in Table 3-1 of Enclosure 3.
3. This requirement represents a new UCR requirement for which the vendor has 18-months (July 2011) to comply.
4. The UCR 2008 Change 1 added 18-month rule for G.711 and V.150.1 IAD support.
5. The MFSS must meet T1 PRI (ANSI T1.619a and NI-2) CCA IWF. The T1 CAS and T1 CCS7 CCA IWF are conditional.
6. The MFSS must meet TDM requirements for T1 PRI (ANSI T1.619a and NI-2). The TDM requirements for T1 CAS and T1 CCS7 are conditional.
7. The E1 requirements for OCONUS are conditionally required for deployments in Europe.

LEGEND:

AEI	AS-SIP End Instrument
AS	Assured Services
ASAC	Assured Services Admission Control
AS-SIP	Assured Services Session Initiation Protocol
BRI	Basic Rate Interface
CAS	Channel Associated Signaling
CCA	Call Connection Agent
CCS7	Common Channel Signaling 7
CR	Capabilities Requirement
DSCP	Differentiated Services Code Point
DSN	Defense Switched Network
EBC	Edge Boundary Controller
EI	End Instrument
FCAPS	Fault, Configuration, Accounting, Performance, and Security
FR	Functional Requirement
IA	Information Assurance
IAD	Integrated Access Device
ID	Identification
IP	Internet Protocol
IPv6	Internet Protocol version 6
ISDN	Integrated Services Digital Network
IWF	Interworking Function
LoC	Letter of Compliance
LSC	Local Session Controller
MFSS	Multifunction Softswitch
MG	Media Gateway
MGC	Media Gateway Controller
NM	Network Management
NMS	Network Management System
OCONUS	Outside the Continental United States
PBAS	Precedence-Based Assured Service
PEI	Proprietary End Instrument
PSTN	Public Switch Telephone Network
SG	Signaling Gateway
SIP	Session Initiation Protocol
SS7	Signaling System Number 7
SUT	System Under Test
T1 standard	1.544 Mbps North American trunk
TDM	Time Division Multiplexing
UCR	Unified Capabilities Requirements
UFS	User Features and Services
VoIP	Voice over Internet Protocol
VVoIP	Voice and Video over Internet Protocol
WAN	Wide Area Network
WWNDP Plan	World Wide Numbering and Dialing

7.3 Information Assurance. Table 2-3 details the Information Assurance (IA) requirements applicable to an MFSS.

Table 2-3. MFSS IA Requirements

Requirement	Applicability (See note)	UCR Reference	Criteria
General Requirements	Required	5.4.6.2	Detailed requirements and associated criteria for MFSS are listed in the IATP (Reference (e)).
Authentication	Required	5.4.6.2.1	
Integrity	Required	5.4.6.2.2	
Confidentiality	Required	5.4.6.2.3	
Non-Repudiation	Required	5.4.6.2.4	
Availability	Required	5.4.6.2.5	

Table 2-3. MFSS IA Requirements (continued)

NOTE: Annotation of 'required' refers to high level requirement category. Applicability of each sub-requirement is provided in Reference (e).

LEGEND:

IA	Information Assurance	MFSS	Multifunction Softswitch
IATP	IA Test Plan	UCR	Unified capabilities Requirements

7.4 Other. None

8. TEST NETWORK DESCRIPTION. The SUT was tested at JITC in a manner and configuration similar to that of a notional operational environment. Testing the system's required functions and features was conducted using the test configurations depicted in Figures 2-3 and 2-4. Figure 2-3 depicts the minimum test architecture for testing MFSSs. Figure 2-4 depicts the SUT's test configuration.

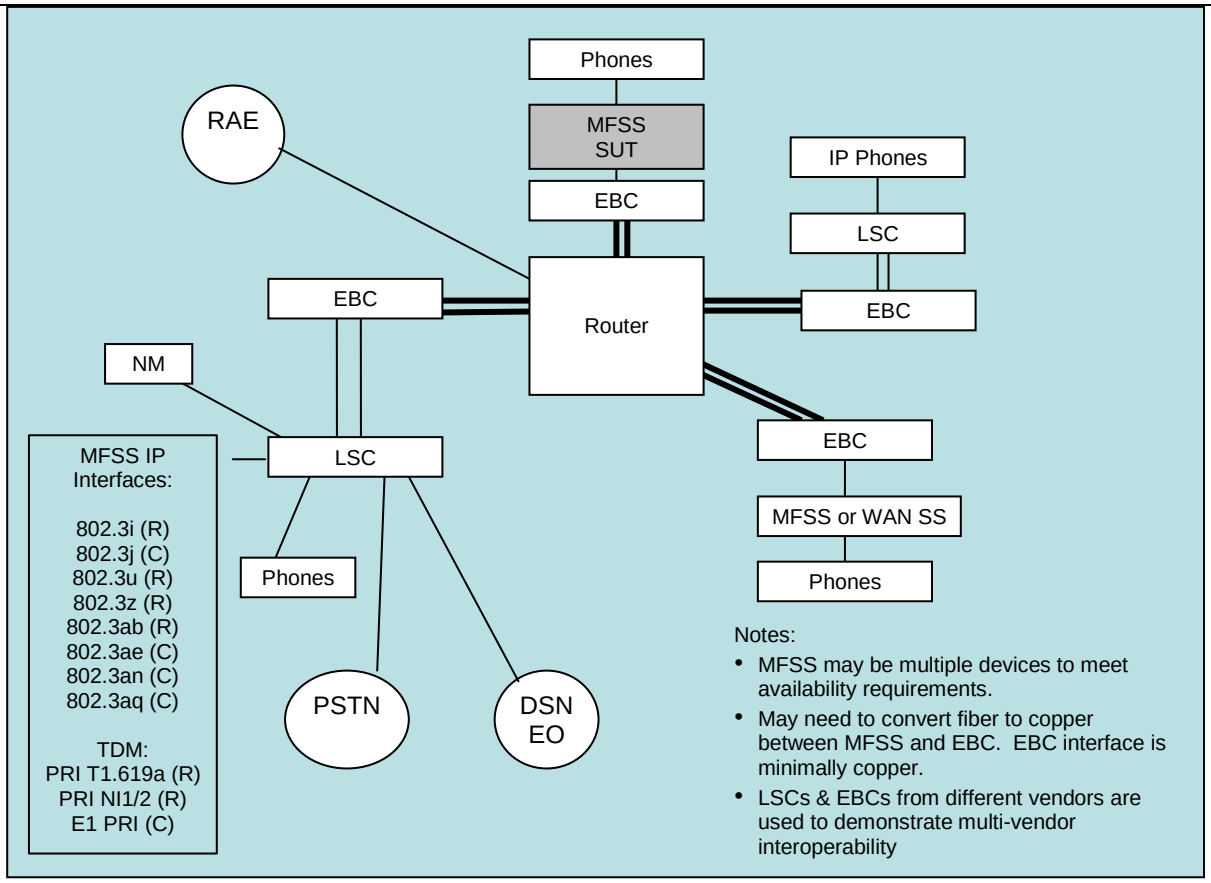

LEGEND:

C	Conditional	NM	Network Management
DSN	Defense Switched Network	PSTN	Public Switch Telephone Network
EBC	Edge Boundary Controller	R	Required
EO	End Office	RAE	Required Ancillary Equipment
IP	Internet Protocol	SUT	System Under Test
LSC	Local Session Controller	TDM	Time Division Multiplexing
MFSS	MultiFunction Softswitch	WAN SS	Wide Area Network Softswitch

Figure 2-3. MFSS Minimum Test Architecture

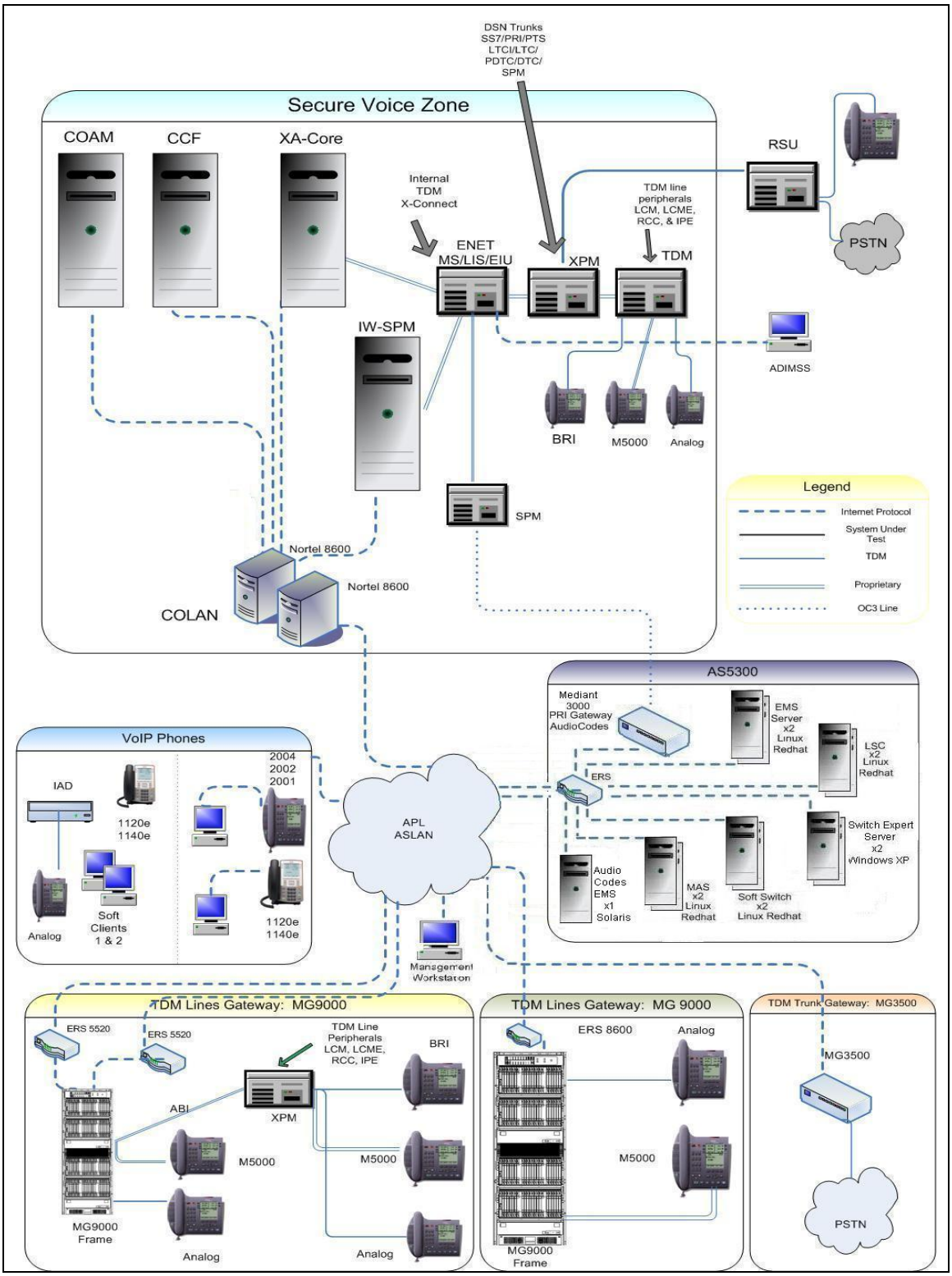

Figure 2-4. MFSS Test Configuration

LEGEND:

ADIMSS	Advanced DSN Integrated Management Support System
APL	Approved Products List
ASLAN	Assured Services Local Area Network
BRI	Basic Rate Interface
CCF	Call Control Frame
COAM	Centralized Operation, Administration and Maintenance
COLAN	Central Office LAN
CS2100	Communications Server 21st Century
DSN	Defense Switched Network
EIU	Ethernet Interface Unit
EMS	Element Management System
ENET	Enhanced Network
ERS	Ethernet Router Switch
IAD	Integrated Access Device
IP	Internet Protocol
IPE	Intelligent Peripheral Module
LAN	Local Area Network
LCM	Line Concentration Module
LCME	Line Concentration Module Enhanced
LIS	Link Interface Shelf
LSC	Local Session Controller
M3K	M3000
MAS	Media Application Server
MG	Media Gateway
Mgr	Manager
MS	Message Switch
OC3	Optical Carrier Level 3
PRI	Primary Rate Interface
PSTN	Public Switch Telephone Network
RCC	Remote Cluster Controller
RTS	Real Time Services
SIP	Session Initiation Protocol
SPM	Spectrum Peripheral Module
TDM	Time Division Multiplexing
XA-Core	Extended Architecture Core
XPM	XMS-Based Peripheral Module
XMS	Extended Multiprocessor System

Figure 2-4. MFSS Test Configuration (continued)

9. SYSTEM CONFIGURATIONS. Table 2-4 provides the system configurations and hardware and software components tested with the SUT. The SUT was tested in an operationally realistic environment to determine its interoperability capability with associated network devices and network traffic.

Table 2-4. Tested System Configurations

Multi-Function Software Switch	
System Name	**Software Release**
Avaya AS5300	AS5300 Release 2.0 Load: MCP_13.0.0.0_2010-05-05-2108 Patch: MCP_13.0.0.6_2010-11-30-1031.patch
Avaya CS2100	Succession Enterprise (SE) 09.1 Please refer to the APL listing for the CS2100 to get a description of SUT components and firmware/software lineup

SUT Components		
Switch Expert		
Part Number	**Part Description**	**Firmware/Software**
NTVW02DP	AS5300 R2.0 Switch Expert MFSS Software CD	Version 7.0, Build 354
NTVW02DQ	AS5300 R2.0 Switch Expert Small Package Software CD	Version 7.0, Build 354
NTVW02DN	AS5300 Release 2.0 Switch Expert MFSS Package	Version 7.0, Build 354
NTVW02DO	AS5300 Release 2.0 Switch Expert Small Package	Version 7.0, Build 354
SIP Core OAM&P		
Part Number	**Part Description**	**Firmware/Software**
NTVW02AD	AS5300 Release 2.0 SIP Core New System Software Package	Load: MCP_13.0.0.5_2010-10-07-1208, patch: MCP_13.0.0.6_2010-11-30-1031.patch Oracle version: 10.2.0.4.0, patch level 19
NTVW02AF	AS5300 R1.0 to R2.0 Upgrade w/SRS PrePaid	
NTVW02AG	AS5300 R1.0 to R2.0 Upgrade and Expansions	
NTVW02DE	AS5300 Release 2.0 OS Software Kit - CDROM and DVD	Version: 13.0.13 Patch to: 13.0.18
NTVW02DD	AS5300 Release 2.0 Core Apps Software Kit CDROM and DVD	Load: MCP_13.0.0.5_2010-10-07-1208, patch: MCP_13.0.0.6_2010-11-30-1031.patch Oracle version: 10.2.0.4.0, patch level 19
SIP Core SS Session Manager		
Part Number	**Part Description**	**Firmware/Software**
NTVW02AD	AS5300 Release 2.0 SIP Core New System Software Package	Load: MCP_13.0.0.5_2010-10-07-1208, patch: MCP_13.0.0.6_2010-11-30-1031.patch Oracle version: 10.2.0.4.0, patch level 19
NTVW02AF	AS5300 R1.0 to R2.0 Upgrade w/SRS PrePaid	
NTVW02AG	AS5300 R1.0 to R2.0 Upgrade and Expansions	
NTVW02DE	AS5300 Release 2.0 OS Software Kit - CDROM and DVD	Version: 13.0.21
NTVW02DD	AS5300 Release 2.0 Core Apps Software Kit CDROM and DVD	Load: MCP_13.0.0.5_2010-10-07-1208, patch: MCP_13.0.0.6_2010-11-30-1031.patch Oracle version: 10.2.0.4.0, patch level 19
SIP Core LSC Session Manager		
Part Number	**Part Description**	**Firmware/Software**
NTVW02AD	AS5300 Release 2.0 SIP Core New System Software Package	Load: MCP_13.0.0.5_2010-10-07-1208, patch: MCP_13.0.0.6_2010-11-30-1031.patch Oracle version: 10.2.0.4.0, patch level 19
NTVW02AF	AS5300 R1.0 to R2.0 Upgrade w/SRS PrePaid	
NTVW02AG	AS5300 R1.0 to R2.0 Upgrade and Expansions	
NTVW02DE	AS5300 Release 2.0 OS Software Kit - CDROM and DVD	Version: 13.0.13 Patch to: 13.0.18
NTVW02DD	AS5300 Release 2.0 Core Apps Software Kit CDROM and DVD	Load: MCP_13.0.0.5_2010-10-07-1208, patch: MCP_13.0.0.6_2010-11-30-1031.patch Oracle version: 10.2.0.4.0, patch level 19

Table 2-4. Tested System Configurations (continued)

Media Application Server		
Part Number	**Part Description**	**Firmware/Software**
NTVW02AE	AS5300 Release 2.0 MAS New System Software Package	Version: 6.6.0.74
NTVW02AF	AS5300 R1.0 to R2.0 Upgrade w/SRS PrePaid	Version: 6.6.0.74
NTVW02AG	AS5300 R1.0 to R2.0 Upgrade and Expansions	Version: 6.6.0.74
NTVW02DF	AS5300 Rls 2.0 MAS Base and Applications	Version: 6.6.0.74
NTVW02DE	AS5300 Release 2.0 OS Software Kit - CDROM and DVD	Version: 13.0.19
Audiocodes PRI Gateway		
Part Number	**Part Description**	**Firmware/Software**
NTVW02CF	AS5300 Release 2.0 Audiocodes M3K PRI GW 8 Span Bundle DC	Version: 5.80A.045.000
NTVW02CG	AS5300 Release 2.0 Audiocodes M3K PRI GW 8 Span Bundle AC	Version: 5.80A.045.000
NTVW02CH	AS5300 Release 2.0 Audiocodes M3K PRI GW 12 Span Bundle DC	Version: 5.80A.045.000
NTVW02CI	AS5300 Release 2.0 Audiocodes M3K PRI GW 12 Span Bundle AC	Version: 5.80A.045.000
NTVW02CJ	AS5300 Release 2.0 Audiocodes M3K PRI GW 16 Span Bundle DC	Version: 5.80A.045.000
NTVW02CK	AS5300 Release 2.0 Audiocodes M3K PRI GW 16 Span Bundle AC	Version: 5.80A.045.000
NTVW02CL	AS5300 Release 2.0 Audiocodes M3K PRI GW 42 Span Bundle DC	Version: 5.80A.045.000
NTVW02CM	AS5300 Release 2.0 Audiocodes M3K PRI GW 42 Span Bundle AC	Version: 5.80A.045.000
NTVW02DG	AS5300 Release 2.0 Audiocodes M3K PRI GW Software CD	Version: 5.80A.045.000
NTVW02CN	AS5300 Release 2.0 Audiocodes M3K PRI GW OC3 Bundle DC	Version: 5.80A.045.000
NTVW02CO	AS5300 Release 2.0 Audiocodes M3K PRI GW OC3 Bundle AC	Version: 5.80A.045.000
NTVW02DH	AS5300 Release 2.0 Audiocodes M3K/6310 PRI GW Software CD	Version: 5.80A.045.000
Audiocodes Element Management System		
Part Number	**Part Description**	**Firmware/Software**
NTVW02AY	AS5300 Audiocodes EMS Server Package AC	Version: 5.8.83
NTVW02AZ	AS5300 Audiocodes EMS Server Package DC	
NTVW02DK	AS5300 Release 2.0 Audiocodes EMS Application SW on Sun Netra T2000 Server with Oracle 9.2 and Solaris 10 and JAVA ES installed	
Device Name		**Software Release**
CPE AS5300 UC Client (previously MMPC Client)		Version: 7.2.3068_20101007
AS5300 1120E and 1140E AS-SIP IP Deskphones		SIP Based Version: 03.01.09.00
CS2100 11xx AS-SIP IP Deskphones		UNISTIM Based Version: C7F
Audiocodes MP112 (2 port Integrated Access Device)		Version: 5.80A.054.001
Audiocodes MP124 (24 port Integrated Access Device)		Version: 5.80A.054.001
Management Workstation		Customer Provided STIG'd PC

Table 2-4. Tested System Configurations (continued)

LEGEND:

AC	Alternating Current	MAS	Media Application Server
APL	Approved Products List	MFSS	Multifunction Softswitch
Apps	Applications	MMPC	Multimedia Personal Computer
AS	Assured Services	OC3	Optical Carrier-Level 3
CDROM	Compact Disk Read-Only Memory	OS	Operating System
CPE	Customer Premise Equipment	PC	Personal Computer
CS	Communication Server	PRI	Primary Rate Interface
DC	Direct Current	SE	Succession Enterprise
DVD	Digital Video Disk	SIP	Session Initiation Protocol
EMS	Element Management System	STIG	Security Technical Implementation Guide
GW	Gateway	SUT	System Under Test
IP	Internet Protocol	SW	Software
LSC	Local Session Controller	UC	Unified Capabilities
M3K	M3000	UNISTIM	Unified Networks IP Stimulus

10. TESTING LIMITATIONS. The JITC test team noted the following testing limitations including the impact they may have on interpretation of the results and conclusions. Any untested requirements are also included in the testing limitations.

a. Call Loading. The JITC could not create a large volume of line calls because the line signaling protocol used by the SUT is proprietary. Also, the JITC could not generate a huge volume of AS-SIP trunk calls because of the limited lines available and lack of AS-SIP test equipment. These limitations pose a low risk to interoperability and should not impact overall results and conclusions. The use of operational data as the MFSS is fielded will validate the SUTs ability to support its proposed number of subscribers (up to 250,000).

b. Assured Services Session Initiation Protocol End Instruments. The JITC did not test the SUT with generic AS-SIP End Instruments (AEIs) because none were available at the time of test. A vendor has yet to submit a product as an AEI for certification. This requirement was an addition to the UCR 2008 Change 1 and therefore the SUT has 18-months (July 2011) to comply with the requirement.

c. Proprietary End Instruments. The JITC did not test PEIs for video requirements. The only devices tested for video were Softphones. The video phones were tested intra-enclave and to the AS5300 Local Session Controller. Multi-vendor interoperability has not been demonstrated. Since the Defense Switched Network (DSN) has not deployed videophones under legacy certifications, this poses a low operational impact.

d. Internet Protocol version 6. The JITC tested the SUT to verify its IPv6 capabilities intra-enclave. The vendor submitted a letter of compliance (LoC) stating limitations. Paragraph 11 provides detailed information about IPv6 results.

e. Network Management. The JITC did not test the SUTs NM capabilities to meet UCR requirements. The vendor did submit an NM LoC that was reviewed by JITC. The JITC's evaluation of the SUT's NM capabilities is provided in paragraph 11.

f. Secure Data and Secure Voice Calls. Since the standard for modem over IP is based on ITU-T V.150.1 and vendors have 18-months (July 2011) to comply, secure calls could not be tested inter-enclave (between LSCs/MFSSs via DISN).

11. INTEROPERABILITY EVALUATION RESULTS. The SUT meets the critical interoperability requirements for an MFSS in accordance with the UCR and is certified for joint use with other UC Products listed on the APL. Additional discussion regarding specific testing results is located in subsequent paragraphs.

11.1 Interfaces. The SUT met line interface requirements for 10/100 Base-X interfaces. These IP line interfaces were met through use of PEIs (voice only) and Softphone clients (voice and video). The SUT supports 2-wire analog phones via an Integrated Access Device (IAD). The SUT met the external interface requirements for 10/100/1000Base-X (AS-SIP) and Integrated Services Digital Network (ISDN) Primary Rate Interface (PRI) for both ANSI T1.619a MLPP and National ISDN-2 (NI-2) commercial. The JITC did not test the other conditional interfaces. The interface status of the SUT is provided in Table 2-5.

Table 2-5. SUT Interface Requirements Status

Interface	Critical	UCR Reference	Threshold CR/FR Requirements (See note 1.)	Status	Remarks (See note 2.)
MFS CS2100 Line Interfaces					
10Base-X	No	UCR 2008 Section 5.2	Refer to the Avaya MFS CS2100 XACORE with Release SE09.1 Special Interoperability Certification Letter and Test Summary Report Listed on the UC APL.	Certified	Refer to the Avaya MFS CS2100 XACORE with Release SE09.1 Special Interoperability Certification Letter and Test Summary Report Listed on the UC APL.
100Base-X	No			Certified	
1000Base-X	No			Not Tested	
2-wire analog	Yes			Certified	
2-Wire Digital Proprietary	No			Certified	
ISDN BRI U and ST	Yes			Certified	
MFS CS2100 External Interfaces					
ISDN T1 PRI ANSI T1.619a	Yes	UCR 2008 Section 5.2	Refer to the Avaya MFS CS2100 XACORE with Release SE09.1 Special Interoperability Certification Letter and Test Summary Report Listed on the UC APL.	Certified	Refer to the Avaya MFS CS2100 XACORE with Release SE09.1 Special Interoperability Certification Letter and Test Summary Report Listed on the UC APL.
ISDN T1 PRI NI-2	Yes			Certified	
T1 CCS7 ANSI T1.619a	Yes			Certified	
E1 CCS7 ANSI T1.619a	No (See note 3.)			Certified	
T1 CAS (DTMF, DP, MFR1)	Yes			Certified	
E1 CAS (DTMF, MFR1)	No (See note 3.)			Certified	
E1 PRI ITU-T Q.955.3	Yes (See notes 3& 4.)			Certified	

Table 2-5. SUT Interface Requirements Status (continued)

Interface	Critical	UCR Reference	Threshold CR/FR Requirements (See note 1.)	Status	Remarks (See note 2.)
MFS CS2100 External Interfaces (continued)					
E1 PRI ITU-T Q.931	No (See notes 3 & 4.)	UCR 2008 Section 5.2	Refer to the Avaya MFS CS2100 XACORE with Release SE09.1 Special Interoperability Certification Letter and Test Summary Report Listed on the UC APL.	Certified	Refer to the Avaya MFS CS2100 XACORE with Release SE09.1 Special Interoperability Certification Letter and Test Summary Report Listed on the UC APL.
SONET OC-3	No (See note 3.)			Certified	
MFS CS2100 NM Interfaces					
10Base-X	No (See note 5 & 6.)	UCR 2008 Section 5.2	Refer to the Avaya MFS CS2100 XACORE with Release SE09.1 Special Interoperability Certification Letter and Test Summary Report Listed on the UC APL	Certified	Refer to the Avaya MFS CS2100 XACORE with Release SE09.1 Special Interoperability Certification Letter and Test Summary Report Listed on the UC APL.
100Base-X	No (See note 5 & 6.)			Certified	
EIA-232 Serial	No (See note 6.)			Certified	
AS5300 Line Interfaces					
10Base-X	Yes	5.3.2.6.3	2, 4, 10, 13, 16	Certified	Met threshold CRs/FRs for IEEE 802.3i and 802.3j. Applies to PEIs (voice) and Softphones (voice and video).
100Base-X	Yes	5.3.2.6.3	2, 4, 10, 13, 16	Certified	Met threshold CRs/FRs for IEEE 802.3u. Applies to PEIs (voice) and Softphones (voice and video).
1000Base-X	No	5.3.2.6.3	2, 4, 10,13, 16	Not Tested	This interface is not offered by the SUT PEIs.
2-wire analog	Yes	5.3.2.6.1.6	2, 4, 10, 13,	Certified	Met threshold CRs/FRs for 2-wire analog instruments. Applies to 2-wire analog secure and non-secure analog instruments. Requirement met through use of an IAD that supports IEEE 802.3i, 802.3u, and 802.3ab.
AS5300 External Interfaces					
10Base-X	No (See note 6.)	5.3.2.4.2	1, 2, 3, 6, 7, 8, 10, 11, 13, 15, 16	Certified	Met threshold CRs/FRs for IEEE 802.3i and 802.3j. Applies to AS-SIP trunk.
100Base-X	No (See note 6.)	5.3.2.4.2	1, 2, 3, 6, 7, 8, 10, 11, 13, 15, 16	Certified	Met threshold CRs/FRs for IEEE 802.3u. Applies to AS-SIP trunk.
1000Base-X	No (See note 6.)	5.3.2.4.2	1, 2, 3, 6, 7, 8, 10, 11, 13, 15, 16	Certified	Met threshold CRs/FRs for IEEE 802.3z and 802.3ab. Applies to AS-SIP trunk.
ISDN T1 PRI ANSI T1.619a	Yes	5.3.2.4.3	2, 3, 7, 8, 10, 13	Certified	Met threshold CRs/FRs . Provides legacy DSN and TELEPORT connectivity.
ISDN T1 PRI NI-2	Yes	5.3.2.4.3	2, 3, 7, 8, 10, 13	Certified	Met threshold CRs/FRs. Provides PSTN Connectivity.
NM					
10Base-X	No (See note 6.)	5.3.2.4.4 5.3.2.7.2.8	16, 17	Certified	Met threshold CRs/FRs. Verified via LoC.
100Base-X	No (See note 6.)	5.3.2.4.4 5.3.2.7.2.8	16, 17	Certified	Met threshold CRs/FRs. Verified via LoC.

Table 2-5. SUT Interface Requirements Status (continued)

NOTES:
1. CR/FR requirements are contained in Table 2. CR/FR numbers represent a roll-up of UCR requirements. Enclosure 3 provides a list of detailed requirements.
2. Paragraph 11 of Enclosure 2 provides detailed information pertaining to open TDRs and associated operational impacts.
3. The interface is conditionally required for deployment in Europe.
4. This interfaces is provided by an Avaya Option 11C PBX1 which is optionally required if the SUT is deployed in Europe.
5. The IEEE 802.3u interface for NM is certified to ADIMSS only.
6. Must provide a minimum of one of the listed IP interfaces.

LEGEND:

ANSI	American National Standards Institute	ISDN	Integrated Services Digital Network
ASD NII Information	Assistant Secretary of Defense for Networks and Integration	ITU-T	International Telecommunications Union – Telecommunication Standardization Sector
BRI	Basic Rate Interface	LoC	Letter of Compliance
CAS	Channel Associated Signaling	NI-2	National ISDN-2
CCS7	Common Channel Signaling 7	NM	Network Management
CR	Capability Requirement	PEI	Proprietary End Instrument
E1	2048 Mbps European trunk standard	PRI	Primary Rate Interface
FR	Functional Requirement	SUT	System Under Test
IAD	Integrated Access Device	T1	1.544 Mbps North American trunk standard
ID	Identification	TDR	Test Discrepancy Report
IEEE	Institute of Electrical and Electronics Engineers	UCR	Unified capabilities Requirements

11.2 Capability Requirements (CR) and Functional Requirements (FR). The SUT CR and FR status is depicted in Table 2-6. Detailed CR/FR requirements are provided in Enclosure 3, Table 3-1. A summary of the SUT's ability to meet UCR requirements are provided in the sub-paragraphs below. All requirements and associated references were derived from UCR 2008 Change 1. Discrepancies discussed below were adjudicated to be minor based on vendor submission and compliance to a Plan of Actions and Milestones.

Table 2-6. SUT Capability Requirements and Functional Requirements Status

CR/FR ID	Capability/ Function	Applicability (See note 1.)	UCR Reference	Status	Remarks
1	**Assured Services Product Features and Capabilities**				
	DSCP Packet Marking	Required	5.3.2.2.1.4	Met	
	Voice Features and Capabilities	Required	5.3.2.2.2.1	Partially Met	See note 2.
	Public Safety Features	Required	5.3.2.2.2.2	Met	
	ASAC – Open Loop	Required	5.3.2.2.2.3	Met	
	Signaling Protocols	Required	5.3.2.2.3	Met	
	Signaling Performance	Conditional	5.3.2.2.4	Met	
2	**Registration, Authentication, and Failover**				
	Registration	Required	5.3.2.3.1	Met	
	Failover	Required	5.3.2.3.2	Met	
3	**Product Physical, Quality, and Environmental Factors**				
	Availability	Required	5.3.2.5.2.1	Met	
	Maximum Downtimes	Required	5.3.2.5.2.2	Met	
	Loss of Packets	Required (See note 3.)	5.3.2.5.4	Met	
4	**Voice End Instruments**				
	Tones and Announcements	Required	5.3.2.6.1.1	Partially Met	See notes 2 and 4.
	Audio Codecs	Required	5.3.2.6.1.2	Partially Met	See note 4.
	VoIP PEI or AEI Audio Performance	Required	5.3.2.6.1.3	Partially Met	See note 4.
	VoIP Sampling Standard	Required	5.3.2.6.1.4	Partially Met	See note 4.
	Authentication to LSC	Required	5.3.2.6.1.5	Partially Met	See note 4.
	Analog Telephone Support	Required (See note 5.)	5.3.2.6.1.6	Partially Met	See notes 4 and 6.
	Softphones	Conditional	5.3.2.6.1.7	Partially Met	See notes 4 and 7.
	ISDN BRI	Conditional	5.3.2.6.1.8	Not Tested	
5	**Video End Instruments**				
	Video End Instrument	Required	5.3.2.6.2	Partially Met	See note 8.
	Display Messages, Tones, and Announcements	Required	5.3.2.6.2.1	Partially Met	See note 8.
	Video Codecs (Including Associated Audio Codecs)	Required	5.3.2.6.2.2	Partially Met	See note 8.
6	**MFSS Requirements**				
	TDM Side EO and Tandem Requirements	Required	5.3.2.8.2.1	Met	See note 9.
	MFSS Signaling Interfaces	Required	5.3.2.8.2.3	Met	
	SG and MG Requirements for Interactions between the TDM and SS Side of the MFSS	Required	5.3.2.8.2.4	Met	
	Features of the SS Side of the MFSS	Required	5.3.2.8.2.6	Met	
	ASAC Requirements for the MFSS Related to Voice and Video	Required	5.3.2.8.2.7	Met	
7	**Call Connection Agent Requirements**				
	CCA IWF Component	Required	5.3.2.9.2.1	Met	
	CCA MGC Component	Required	5.3.2.9.2.2	Met	
	SG Component	Conditional	5.3.2.9.2.3	Not Tested	
	CCA-IWF Support for AS-SIP	Required	5.3.2.9.5.1	Met	
	CCA-IWF Support for SS7	Conditional	5.3.2.9.5.2	Met	See note 9.
	CCA-IWF Support for PRI via MG	Required	5.3.2.9.5.3	Met	
	CCA-IWF Support for CAS Trunks via MG	Conditional	5.3.2.9.5.4	Met	See note 9.

Table 2-6. SUT Capability Requirements and Functional Requirements Status (continued)

CR/FR ID	Capability/Function	Applicability (See note 1)	UCR Reference	Status	Remarks
7	**Call Connection Agent Requirements (continued)**				
	CCA-IWF Support for PEI and AEI Signaling Protocols	Required	5.3.2.9.5.5	Partially Met	See note 10.
	CCA-IWF Support for VoIP and TDM Protocol Interworking	Required	5.3.2.9.5.6	Met	.
	CCA Preservation of Call Ringing State during Failure Conditions	Required (See note 3.)	5.3.2.9.6	Met	
	CCA Interactions with Transport Interface Functions	Required	5.3.2.10.3	Met	
	CCA Interactions with the EBC	Required	5.3.2.10.4	Met	
	CCA Support for Admission Control	Required	5.3.2.10.5	Met	
	CCA Support for UFS	Required	5.3.2.10.6	Met	
	CCA Support for IA	Required	5.3.2.10.7	Met	
	CCA Interaction with EIs	Required	5.3.2.10.10	Partially Met	See notes 7 and 8.
	CCA Support for AS Voice and Video	Required	5.3.2.10.11	Partially Met	See notes 7 and 8.
	CCA Interactions with Service control Functions	Required	5.3.2.10.12	Met	
	CCA Interworking between AS-SIP and SS7	Conditional	5.3.2.11	Met	See note 9.
8	**MG Requirements**				
	Role of MG In LSC	Required	5.3.2.12.3.1	Met	
	MG Support for ASAC	Required	5.3.2.12.4.1	Met	
	MG and IA Functions	Required	5.3.2.12.4.2	Met	
	MG Interaction with Service Control Function	Required	5.3.2.12.4.3	Met	
	MG Interactions with IP Transport Interface Functions	Required	5.3.2.12.4.4	Met	
	MG-EBC interactions	Required	5.3.2.12.4.5	Met	
	MG IP-Based PSTN Interface Requirements	Conditional	5.3.2.12.4.7	Not Tested	
	MG Interaction with EIs	Required	5.3.2.12.4.8	Met	Applies to Analog EIs.
	MG support for User Features and Services	Required	5.3.2.12.4.9	Met	
	MG Interface to TDM	Required	5.3.2.12.5	Met	See note 9.
	MG Interface to TDM Allied and Coalition	Conditional	5.3.2.12.6	Not Tested	
	MG Interface to TDM PSTN in US	Required	5.3.2.12.7	Met	See note 9.
	MG Interfaces to TDM PSTN OCONUS	Required	5.3.2.12.8	Met	See note 9.
	MG Support for CCS7	Conditional	5.3.2.12.9	Met	See note 9.
	MG Support for ISDN PRI Trunks	Required	5.3.2.12.10	Met	
	MG Support for CAS Trunks	Conditional	5.3.2.12.11	Met	See note 9.
	MG requirements for VoIP Internal Interfaces	Required	5.3.2.12.12	Met	
	MG Echo Cancellation	Required	5.3.2.12.13	Met	
	MG Clock Timing	Required	5.3.2.12.14	Met	
	MGC-MG CCA Functions	Required	5.3.2.12.15	Met	
	MG V.150.1	Required (See note 3.)	5.3.2.12.16	Not Tested	See note 6.
	MG Preservation of Call Ringing during Failure	Required (See note 3.)	5.3.2.12.17	Met	

Table 2-6. SUT Capability Requirements and Functional Requirements Status (continued)

CR/FR ID	Capability/Function	Applicability (See note 1)	UCR Reference	Status	Remarks
9	**SG Requirements**				
	SG and CCS7 network Interactions	Conditional	5.3.2.13.5.1	Not Tested	
	SG Interactions with CCA	Conditional	5.3.2.13.5.2	Not Tested	
	SG Interworking Functions	Conditional	5.3.2.13.5.3	Not Tested	
10	**WWNDP Requirements**				
	WWNDP	Required	5.3.2.16	Met	
	DSN WWNDP	Required	5.3.2.16.1	Met	
11	**Commercial Cost Avoidance**				
	Commercial Cost Avoidance	Required	5.3.2.23	Partially Met	See note 11.
12	**AS-SIP Based for External Devices (Voicemail, Unified Messaging, and Automated Receiving Devices)**				
	AS-SIP Requirements for External Interfaces	Conditional	5.3.2.24	Not Tested	
13	**Precedence Call Diversion**				
	Precedence Call Diversion	Required	5.3.2.25	Met	
14	**Attendant Station Features**				
	Precedence and Preemption	Required (See note 3.)	5.3.2.26.1	Met	
	Call Display	Required (See note 3.)	5.3.2.26.2	Met	
	Class of Service Override	Required (See note 3.)	5.3.2.26.3	Met	
	Busy Override and Busy Verification	Required (See note 3.)	5.3.2.26.4	Met	
	Night service	Required (See note 3.)	5.3.2.26.5	Met	
	Automatic Recall of Attendant	Required (See note 3.)	5.3.2.26.6	Met	
	Calls in Queue to the Attendant	Required (See note 3.)	5.3.2.26.7	Met	
15	**AS-SIP Requirements**				
	SIP Requirements for AS-SIP Signaling Appliances and AS-SIP EIs	Required (See note 3.)	5.3.4.7	Not Tested	See note 4.
	SIP Session Keep-Alive Timer	Required	5.3.4.8	Met	
	Session Description Protocol	Required	5.3.4.9	Met	
	Precedence and Preemption	Required	5.3.4.10	Met	
	Video Telephony – General Rules	Required	5.3.4.12	Partially Met	See note 8.
	Calling Services	Required	5.3.4.13	Met	
	SIP Translation Requirements for Inter-working AS-SIP Signaling Appliances	Required	5.3.4.14	Met	
	Relevant Timers for the Terminating Gateway and the Originating Gateway	Required	5.3.4.15	Met	
	SIP Requirements for Interworking AS-SIP Signaling Appliances	Required	5.3.4.16	Met	
	Keep-Alive Timer Requirements for Interworking AS-SIP Signaling Appliances	Required	5.3.4.17	Met	
	Precedence and Preemption Extensions for Interworking AS-SIP Signaling Appliances	Required	5.3.4.18	Met	
	Supplementary Services	Required	5.3.4.19	Met	
16	**IPv6 Requirements**				
	Product Requirements	Required	5.3.5.4	Partially Met	See note 11.

Table 2-6. SUT Capability Requirements and Functional Requirements Status (continued)

CR/FR ID	Capability/Function	Applicability (See note 1)	UCR Reference	Status	Remarks
17	**NM**				
	LSC Management Function	Required	5.3.2.7.2.6	Partially Met	See note 12.
	VVoIP NMS Interface Requirements	Required	5.3.2.4.4	Partially Met	See note 12.
	General Management requirements	Required	5.3.2.17.2	Partially Met	See note 12.
	Requirement for FCAPS Management	Required	5.3.2.17.3	Partially Met	See notes 12 and 13.
	NM requirements of Appliance Functions	Required	5.3.2.18	Partially Met	See note 12.
	Accounting Management	Required	5.3.2.19	Partially Met	See note 12.

NOTES:
1. The annotation of 'required' refers to the high-level requirement category. The applicability of each sub-requirement is provided in Enclosure 3.
2. The SUT had outstanding open TDRs at the completion of testing, which were adjudicated by DISA to have a minor operational impact. The vendor has submitted a PoAM to address the open TDRs. Reference (f), Enclosure 2, Paragraph 11, provides additional details.
3. This requirement represents a new UCR requirement and the vendor has 18-months (until July 2011) to comply.
4. The SUT met the requirement for PEIs; SUT was not tested with generic AEI requirements because no AEI was provided. AEIs are a new UCR 2008, Change 1, requirement and the vendor has 18-months (until July 2011) to comply.
5. The UCR 2008, Change 1, added V.150.1 IAD support. Since this is a new requirement, the vendor has 18 months (until July 2011) to comply.
6. The vendor did not demonstrate V.150.1 support. Since this is a new requirement, the vendor has 18 months (until July 2011) to comply.
7. The SUT met both voice and video requirements via Softphone.
8. The SUT demonstrated video requirements via Softphone only, not PEIs (Proprietary Hard Video Phones). The vendor did not provide a PEI video capability. This was adjudicated by DISA to have a minor operational impact because of the limited deployment of PEIs with video.
9. This capability was provided by the MFS (CS2100) portion of the SUT.
10. The SUT met PEI CCA-IWF requirements. The AEI CCA-IWF requirements were not tested. Since these are new requirements, the vendor has 18 months (until July 2011) to comply.
11. The vendor submitted an IPv6 LoC with noted discrepancies, which include the interface for Commercial Cost Avoidance functionality. The open TDRs were adjudicated by DISA to have a minor operational impact with a vendor submitted PoAM.
12. The vendor submitted a NM LoC with noted discrepancies. The open TDRs were adjudicated by DISA to have a minor operational impact with a vendor submitted PoAM.
13. The SUT does not support destination code controls. This was adjudicated by DISA to have a minor operational impact because of the limited deployment of users.

Table 2-6. SUT Capability Requirements and Functional Requirements Status (continued)

LEGEND:

AEI	AS-SIP End Instrument
AS	Assured Services
ASAC	Assured Services Admission Control
AS-SIP	Assured Services Session Initiation Protocol
BRI	Basic Rate Interface
CAS	Channel Associated Signaling
CCA	Call Connection Agent
CCS7	Common Channel Signaling 7
CR	Capabilities Requirement
DSCP	Differentiated Services Code Point
DSN	Defense Switched Network
EBC	Edge Boundary Controller
EI	End Instrument
FCAPS	Fault, Configuration, Accounting, Performance, and Security
FR	Functional Requirement
IA	Information Assurance
IAD	Integrated Access Device
ID	Identification
IP	Internet Protocol
IPv6	Internet Protocol version 6
ISDN	Integrated Services Digital Network
IWF	Interworking Function
LoC	Letter of Compliance
LSC	Local Session Controller
MG	Media Gateway
MGC	Media Gateway Controller
NM	Network Management
NMS	Network Management System
OCONUS	Outside the Continental United States
PBAS	Precedence-Based Assured Service
PEI	Proprietary End Instrument
PoAM	Plan of Actions and Milestones
PRI	Primary Rate Interface
PSTN	Public Switch Telephone Network
SG	Signaling Gateway
SIP	Session Initiation Protocol
SS7	Signaling System Number 7
SUT	System Under Test
T1	1.544 Mbps North American trunk standard
TDM	Time Division Multiplexing
TDR	Test Discrepancy Report
UCR	Unified Capabilities Requirements
UFS	User Features and Services
VoIP	Voice over Internet Protocol
VVoIP	Voice and Video over Internet Protocol
WAN	Wide Area Network
WWNDP	World Wide Numbering and Dialing Plan

a. Assured Services Product Features and Capabilities.

(1) Differentiated Services Code Point Packet (DSCP Packet Marking). As part of the session setup process, the MFSS controls what DSCP to use in the subsequent session media stream packets. The exact DSCP method used shall comply with UCR 2008 Change 1, Section 5.3.3.3.2. The SUT met all DSCP Packet Marking requirements for IPv4. The SUT was only tested for IPv6 intra-enclave (see paragraph 11.2. p).

(2) Voice Features and Capabilities. The MFSS must provide all of the features listed in Table 5.3.2.2-1 of UCR 2008 Change 1. The SUT met all Voice Features and Capabilities requirements, with the following minor exception: Analog IAD calls above ROUTINE to Cisco LSC DN with call forwarding fails. This was adjudicated by DISA to have a minor operational impact.

(3) Public Safety Features. The MFSS must provide basic emergency service (911), tracing of terminating calls, outgoing call tracing, and tracing of a call in progress. The SUT met all Public Safety Features requirements.

(4) ASAC – Open Loop. The MFSS must meet the ASAC requirements for the LSC and the MFSS. In the execution of ASAC, certain procedures need to be followed, such as (a) actions to be taken if a precedence session request cannot be completed because existing sessions are at equal or higher precedence, or (b) tones to

be generated when a session is preempted. The SUT met all ASAC requirements.

(5) Signaling Protocols. The MFSS must use appropriate signaling for specific trunk types. The control/management protocol between the PEI and the LSC is, in general, proprietary. The control/management protocol between the AEI and the LSC is AS-SIP as specified in Section 5.3.4, AS-SIP Requirements, of this document. The signaling protocol used on UC IP trunks is AS-SIP as specified in UCR 2008 Change 1, Section 5.3.4, AS-SIP Requirements. The LSC and the MG within the MFSS use DSN T1.619a PRI signaling on DSN PRI trunks. The SUT met all Signaling Protocol requirements. The conditional requirement for CAS was not tested.

(6) Signaling Performance. The MFSS has conditional requirements for call setup and tear-down times. The SUT met all signaling performance requirements.

b. Registration, Authentication, and Failover.

(1) Registration. Registration and authentication between the LSC and EIs shall follow the requirements set forth in UCR 2008 Change 1, Section 5.4, Information Assurance Requirements. This feature is tested by IA and is covered in the IA report (see paragraph 11.3).

(2) Failover. Each MFSS (SS) shall be configured with knowledge of each pair of SSs that act as backups for each other. Each MFSS (SS) shall be able to failover to the backup SS when another SS loses connectivity. Each MFSS (SS) shall be able to failback to the original MFSS (SS) upon recovery. MFSS failover was not tested due to the limited number of MFSSs available at the time of test. This requirement was met via vendor LOC.

c. Product Physical, Quality, and Environmental Factors.

(1) Availability. The Assured Services subsystem shall have a hardware/software availability of 0.99999 (non-availability of no more than 5 minutes per year). This requirement was met via vendor LOC.

(2) Maximum Downtimes. The performance parameters associated with the ASLAN, MFSS, and LSC, when combined, shall meet the following maximum downtime requirements:

- IP (10/100 Ethernet) network links – 35 minutes/year
- IP subscriber – 12 minutes/year

This requirement was met via vendor LOC.

(3) Loss of Packets. For VoIP devices, the voice quality shall have a MOS of 4.0 (R-Factor equals 80) or better, as measured in accordance with the E-Model. Additionally, these devices shall not lose two or more consecutive packets in a minute

and shall not lose more than seven voice packets (excluding signaling packets) in a 5-minute period. The SUT met all Packet Loss requirements for PEIs.

d. Voice End Instrument. The SUT met PEI requirements except for the noted discrepancies in the following sub-paragraphs. The SUT was not tested with an AEI because no AEIs have been submitted through the UC process. The AEI requirement was a new requirement for which the 18-month rule (July 2011) applies.

(1) Tones and announcements. Tones and announcements, as required in UCR 2008 Change 1, Sections 5.2.4.5.2, DSN Information Signals, and Section 5.2.2.1.3, Announcements, shall be supported, except for the loss of C2 announcement. The SUT met all requirements for tones and announcements.

(2) Audio codecs. The MFSS shall support the origination and termination of a voice session using the following codecs: G.711 (a-law and µ-law), G.723.1, G.729 or G.729A, and G.722.1. The SUT met all audio codecs requirements for PEIs.

(3) VoIP PEI or AEI Audio Performance Requirements. Voice over IP PEIs or AEIs (i.e., handset, headset, and hands-free types) shall comply with TIA-810-B, November 3, 2006. The SUT met all audio performance requirements for PEIs.

(4) VoIP Sampling Standard. For Fixed-to-Fixed calls, the product shall use 20 ms as the default voice sample length, and as the basis for the voice payload packet size. The SUT met the VoIP sampling standard requirements for PEIs.

(5) Authentication. The PEI or AEI shall be capable of authenticating itself to its associated MFSS and vice versa. The SUT met all PEI to authentication requirements. The SUT was not tested with an AEI. The AEI requirement was a new requirement for which the 18-month rule (July 2011) applies.

(6) Analog Telephone Support. Analog instruments, including secure analog EIs, analog facsimile EIs, and analog modem EIs, shall be supported by the MFSS either by a Terminal Adapter or an Integrated Access Device (IAD) connected to an Ethernet port. The SUT met all analog telephone support requirements via an IAD.

(7) Softphones. The softphone shall be conceptually identical to a traditional IP “hard” telephone and is required to provide voice features and functionality provided by a traditional IP hard telephone. The SUT met all softphone requirements.

(8) ISDN BRI. The ISDN BRI EIs, including secure ISDN BRI EIs, may be supported by the MFSS. The SUT met all requirements for ISDN BRI EIs. BRI EIs are not supported on the Softswitch side of the MFSS.

e. Video End Instruments. The SUT’s PEIs and AEIs must support both voice and video (may be separate devices). The SUT’s PEI support voice only and did not support video. This discrepancy was adjudicated to have a minor operational impact

because MFSS managed video represents a new requirement not fielded under legacy certifications. The SUT was not tested with an AEI. The AEI requirement was a new requirement for which the 18-month rule (July 2011) applies.

(1) Video End Instrument. Video EIs are considered associated with the MFSS and must have been designed in conjunction with the MFSS design. An IP video instrument shall be designed in accordance with the acquiring activity requirements. The SUT provided Video End Instruments on the PC Clients only. The video end instruments were tested intra-enclave and inter-enclave to the AS5300 only. In this configuration, the SUT met all video end instrument requirements for the PC Clients. The PEIs did not provide video capabilities. This was adjudicated as having a minor operational impact.

(2) Display Messages, Tones, and Announcements. Tones and announcements, as appropriate for voice and video over IP, and as required, in UCR 2008 Change 1, Sections 5.2.4.5.2, DSN Information Signals, 5.2.2.1.3, Announcements, shall be supported by the PEI and AEI. The SUT met all messages, tones, and announcements requirements for the PC Clients. The PEIs did not provide video capabilities. This was adjudicated as having minor operational impact.

(3) Video Codecs (Including Associated Audio Codecs). The product shall support the origination, maintenance, and termination of a video session using the following codecs: one G.xxx and one H.xxx must be used to create and sustain a video session. The SUT met all video codecs requirements for the PC Clients. The PEIs did not provide video capabilities. This was adjudicated as having minor operational impact.

f. MFSS Requirements.

(1) TDM Side EO and Tandem Requirements. The requirements for the TDM side of the MFSS are entirely the same as for the DSN MFS specified in UCR 2008 Change 1, Section 5.2, Circuit-Switched Capabilities and Features. The EO and Tandem functions allow the MFSS to support connectivity to existing TDM switches in DoD networks (i.e., continental United States (CONUS) and Global), allied and coalition networks, and the PSTN worldwide (i.e., CONUS and Global). The SUT met all TDM Side EO and Tandem Requirements via the CS2100 XA-Core SE09.1.

(2) MFSS Signaling Interfaces. The MFSS shall support PRI signaling for TDM communication with other systems. The TDM side of the MFSS shall support CCS7 signaling for communication with other TDM systems. The MFSS shall support AS-SIP signaling for IP communication with other MFSSs and LSCs. The MFSS shall provide internal signaling and media conversion for calls between the TDM side and SS side of the MFSS. CCS7 was not tested on the SoftSwitch; CCS7 requirements were met on the CS2100 XA-Core SE09.1, which provides functionality for the TDM requirements of the MFSS. The SUT met all other MFSS Signaling Interface Requirements.

(3) SG and MG Requirements for Interactions between the TDM Side and SS Side of the MFSS. The CCA/SG/MGC/MG complex in the SS side of the MFSS needs to interface and interact with the EO and Tandem functions in the TDM side of the MFSS. The SUT met all SG and MG Requirements for Interactions between the TDM Side and SS side of the MFSS.

(4) Features of the SS Side of the MFSS. The MFSS must support all features for the SS Side of the MFSS as listed in UCR 2008 Section 5.3.2.8.2.6. The SUT met all requirements for the Features of the SS Side of the MFSS.

(5) ASAC Requirements for the MFSS Related to Voice and Video. The MFSS must meet all ASAC requirements as specified in Section 5.3.2.2.2.3, ASAC – Open Loop. The SUT met all ASAC requirements for the MFSS related to voice and video.

g. Call Connection Agent Requirements.

(1) CCA IWF Component. The role of the IWF within the CCA is to support all the VoIP and TDM signaling protocols that the MFSS supports for EIs, MGs, and EBCs, and to interwork all these various signaling protocols with one another. The SUT met all CCA IWF requirements for T1 PRI (ANSI T1.619a and NI-2), E1 PRI (Q.955.3 and Q.931), CAS and CCS7 (ANSI T1.619a).

(2) CCA MGC Component. The MGC within the CCA must control all MGs within the LSC or MFSS, control all trunks within each MG, control all signaling and media streams on each trunk within each MG, accept IP-encapsulated signaling streams from an SG or MG, and use either ITU-T recommendation H.248 or a supplier-proprietary protocol to accomplish these controls. The SUT met all CCA MGC requirements.

(3) SG Component. The role of the CCA with respect to the SG is to control all SGs within the network appliance, and to control all signaling links (DoD CCS7) within each SG. The SG is conditional for an MFSS and was not tested on the SUT.

(4) CCA-IWF Support for AS-SIP. The CCA IWF shall support the AS-SIP protocol consistent with the detailed AS-SIP protocol requirements in Section 5.3.4, AS-SIP Requirements. The SUT met all requirements for CCA-IWF support for AS-SIP for required T1 PRI (ANSI T1.619a and NI-2), E1 PRI (Q.955.3 and Q.931), CAS and CCS7 (ANSI T1.619a) interfaces.

(5) CCA-IWF Support for SS7. CCA-IWF support for SS7 is a conditional requirement for MFSSs; the SUT met SS7 (aka CCS7) via the CS2100 XA-Core SE09.1.

(6) CCA-IWF Support for PRI, via MG. The CCA IWF shall support the

U.S./National ISDN version of the ISDN PRI protocol. The SUT met all requirements for CCA-IWF support for T1 PRI (ANSI T1.619a and NI-2) and E1 PRI (Q.955.3 and Q.931).

(7) CCA-IWF Support for CAS Trunks via MG. Support for CAS is a conditional requirement for MFSSs; the SUT met the requirement via CS2100 XA-Core SE09.1.

(8) CCA-IWF Support for PEI and AEI Signaling Protocols. The CCA IWF shall support supplier-proprietary Voice and Video EIs and their associated proprietary EI signaling protocols. The SUT met all requirements for CCA-IWF Support for PEI Signaling Protocols. No AEIs were tested.

(9) CCA-IWF Support for VoIP and TDM Protocol Interworking. The role of the IWF within the CCA is to support all the VoIP and TDM signaling protocols that the appliance supports for PEIs, AEIs, MGs, and EBCs, and interwork all these various signaling protocols with one another. The SUT met all requirements for CCA-IWF Support for VoIP and TDM Protocol Interworking required T1 PRI (ANSI T1.619a and NI-2) interfaces. Conditional interfaces (E1 PRI, T1 CAS, and T1 CCS7) were also tested and requirements met.

(10) CCA Preservation of Call Ringing State during Failure Conditions. The CCA in the LSC, MFSS, and WAN SS shall not allow AS-SIP sessions that have reached the ringing state (i.e., an AS-SIP 180 (Ringing) message or 183 (Session Progress) has been sent from the called party to the calling party, and the calling party is receiving an audible ringing tone) to fail when an internal failure occurs within the CCA. This requirement was not tested. This is a new UCR requirement for which the 18-month rule applies.

(11) CCA Interactions with Transport Interface Functions. The CCA interacts with Transport Interface functions by using them to communicate with PEIs, AEIs, the EBC, the MGs, and the SG over the ASLAN. The SUT met all requirements for CCA interactions with Transport Interface Functions exception of AEIs. No AEIs were tested.

(12) CCA Interactions with the EBC. The CCA interacts with the EBC by directing AS-SIP signaling packets to it (for signaling messages destined for an MFSS) and by accepting AS-SIP signaling packets from it (for signaling messages directed to the LSC from an MFSS). The SUT met all requirements for CCA interactions with the EBC.

(13) CCA Support for Admission Control. The CCA interacts with the ASAC component of the LSC and MFSS to perform specific functions related to ASAC, such as counting internal, outgoing, and incoming calls; managing separate call budgets for VoIP and Video over IP calls; and providing preemption. The SUT met all requirements for CCA support for Admission Control

(14) CCA Support for UFS. The UFS Server is responsible for providing features and services to VoIP and Video PEIs/AEIs on an LSC or MFSS, where the CCA alone cannot provide the feature or service. The SUT met all requirements for CCA Support for UFS for PEIs.

(15) CCA Support for IA. The Information Assurance function within the appliance ensures that end users, PEIs, AEIs, MGs, SGs, and EBCs that use the appliance are all properly authenticated and authorized by the appliance. The Information Assurance function ensures that Voice and Video signaling streams that traverse the appliance and its ASLAN are encrypted properly SIP/TLS. IA requirements are tested separately; see paragraph 11.3.

(16) CCA Interaction with EIs. The Local Location Server (LLS) provides information on called address translation in response to call routing queries from the CCA. The CCA sends call routing queries to the LLS for both outgoing calls from appliance PEIs or AEIs (i.e., LSC and MFSS) and incoming calls to appliance PEIs or AEIs (i.e., LSC and MFSS). The SUT met all requirements for CCA interaction with PEIs.

(17) CCA Support for AS Voice and Video. The CCA in the MFSS or LSC needs to interact with VoIP PEIs and AEIs served by that MFSS or LSC. The VoIP interface between the PEI and the MFSS or LSC is left up to the network appliance supplier. The VoIP interface between the AEI and the MFSS or LSC is AS-SIP. The SUT met all requirements for CCA support for AS Voice and Video.

(18) CCA Interactions with Service Control Functions. The CCA shall support the ability to remove VoIP and Video sessions and session requests from the media server so the CCA can continue with necessary session processing once the media server has completed its functions. The SUT met all requirements for CCA Interactions with Service Control Functions.

(19) CCA Interworking between AS-SIP and CCS7. Interworking is performed at a node with CCA (SIP/CCS7 IWF) functionality that processes/interworks incoming CCS7 messages to outgoing AS-SIP messages, and similarly, incoming AS-SIP messages to outgoing CCS7 messages. This is a conditional requirement for MFSSs and is not supported by the SUT and was therefore not tested. CCS7 is provided by the SUTs CS2100 XA-Core SE09.1 MFS.

h. MG Requirements.

(1) Role of MG in MFSS. The MG supports interconnection of VoIP, Facsimile over IP (FoIP), and Modem over IP (MoIP) media streams with the MFSS media server, which provides tones and announcements for MFSS calls and MFSS features. To support inter-enclave MoIP and FoIP, the MFSS must meet ITU-T V.150.1 requirements. The V.150.1 requirement is a new UCR requirement for which the 18-month (July 2011) rule applies.

(2) MG Support for ASAC. The MG assists the CCA in performing ASAC (i.e., call preemption based on per-call precedence levels) for outgoing TDM calls at MGs and for incoming TDM calls at MGs. The SUT met all requirements for MG Support for ASAC.

(3) MG and IA Functions. The Information Assurance function within the appliance ensures that end users, PEIs, AEIs, MGs, SGs, and EBCs that use the appliance are all properly authenticated by the appliance. The Information Assurance function also ensures that VoIP signaling streams and media streams that traverse the appliance and its ASLAN are properly encrypted, using SIP/TLS and SRTP, respectively. IA requirements are tested separately; paragraph 11.3.

(4) MG Interaction with Service Control Function. The MG is responsible for routing individual VoIP, FoIP, and MoIP media streams to the media server when instructed to do so by the CCA/MGC. When instructed to do so by the CCA/MGC, the MG is responsible for removing individual VoIP, FoIP, and MoIP media streams from the media server, and for either disconnecting them entirely, or routing them on to other LSC end users (e.g., VoIP or video EIs). The SUT met all requirements for MG Interaction with Service Control Function except for V.150.1. The V.150.1 requirement is a new UCR requirement for which the 18-month (July 2011) rule applies.

(5) MG Interactions with IP Transport Interface Functions. The Transport Interface functions in the MFSS provide interface and connectivity functions with the ASLAN and its IP packet transport network. The SUT met all requirements for MG Interactions with IP Transport Interface Functions.

(6) MG-EBC interactions. The MG interacts with the EBC by sending SRTP media streams to it (for call media destined for a PEI, AEI, or MG that is served by another appliance outside the MFSS), or by accepting SRTP media streams from it (for call media arriving from a PEI, AEI, or MG that is served by another appliance outside the MFSS). The SUT met all requirements for MG-EBC interactions PEI interactions.

(7) MG IP-Based PSTN Interface Requirements. Voice and Video over IP interfaces from the UC network to the PSTN have not been defined. Interfaces from an LSC or MFSS to the PSTN will be via an MG with TDM interfaces as specified in UCR 2008, Section 5.2, Circuit-Switched Capabilities and Features.

(8) MG Interaction with VoIP EIs. The MG in the MFSS or LSC needs to interact with VoIP EIs served by that MFSS or LSC, and with VoIP EIs served by other MFSSs or LSCs. The VoIP signaling interface between the PEI and the MFSS or LSC is left up to the network appliance supplier. The VoIP signaling interface between the AEI and the MFSS or LSC is AS-SIP. The SUT met all MG Interaction with VoIP EIs requirements.

(9) MG Support for User Features and Services. The MG shall support the

operation of features for VoIP and Video end users, consistent with the operation of this feature on analog and ISDN lines in DoD TDM switches today. The SUT met all requirements for MG Support for User Features and Services.

(10) MG Interface to TDM network elements in DoD Networks. Each appliance MG shall support TDM trunk groups that can interconnect with the following devices in DoD networks, in the United States and worldwide: PBXs, SMEOs, EOs, and MFSS. The SUT met all requirements for MG Interface to TDM devices in DoD Networks.

(11) MG Interface to TDM Allied and Coalition. The appliance suppliers should support TDM trunk groups on their MG product that can interconnect with NEs in U.S. allied and coalition partner networks worldwide. This requirement is conditional and was not tested on the SUT.

(12) MG Interface to TDM PSTN in US. Each appliance MG shall support TDM trunk groups that can interconnect with NEs in the PSTN in the United States. The SUT met all requirements for MG Interface to TDM PSTN in the US using T1 PRI (NI-2).

(13) MG Interfaces to TDM PSTN OCONUS. The appliance supplier (i.e., LSC or MFSS supplier) should support TDM trunk groups on its MG product that can interconnect with NEs in foreign country PTT networks (OCONUS) worldwide. The SUT met all requirements for MG Interface to TDM PSTN using E1 PRI (Q.931).

(14) MG Support for CCS7. The MG shall support TDM trunk groups that are controlled by a separate CCA-to-SG signaling link that carries DoD CCS7 protocol. The MG shall support these TDM trunk groups, and the SG shall support DoD CCS7 signaling. This requirement was met via the CS2100 XA-Core SE09.1 MFS.

(15) MG Support for ISDN PRI Trunks. The MG shall support ISDN PRI trunk groups that carry the U.S./National ISDN version of the ISDN PRI protocol. The SUT met all requirements for MG Support for ISDN T1 PRI (ANSI T1.619a and NI-2) Trunks. This requirement was met via the CS2100 XA-Core SE09.1 MFS.

(16) MG Support for CAS Trunks. The MG shall support CAS trunk groups that carry the U.S. version of the CAS protocol. CAS is a conditional requirement for MFSSs. This requirement was met via the CS2100 XA-Core SE09.1 MFS.

(17) MG requirements for VoIP Internal Interfaces. The MG shall connect to the ASLAN of the appliance using the physical layer and data link layer protocols of the ASLAN. In this case, the MG shall appear to the MGC, EBC, and appliance PEIs/AEIs as a physical layer and data link layer endpoint on a LAN switch in the ASLAN. The SUT met all requirements for VoIP Internal Interfaces for PEIs.

(18) MG Echo Cancellation. The MG shall provide an EC capability with an

echo path capacity (echo tail length) of at least 64 ms. The MG shall provide echo cancellation for voice, G3 Fax, and VBD modem fax calls. Each MG EC shall be equipped with an “echo canceller disabling signal” tone detector. The SUT met all requirements for MG Echo Cancellation.

(19) MG Clock Timing. The MG shall derive its clock timing from a designated T1 or PRI interface. The SUT met all MG Clock Timing requirements.

(20) MG V.150.1. When the MG uses V.150.1 inband signaling to transition between audio, FoIP, modem relay, or VBD states or modes, the MG shall continue to use the established session’s protocol (e.g., decimal 17 for UDP) and port numbers so that the transition is transparent to the EBC. The V.150.1 requirement is a new UCR requirement for which the 18-month (July 2011) rule applies.

(21) MG Preservation of Call Ringing during Failure. The LSC MG, MFSS MG, and WAN SS MG shall not allow AS-SIP sessions that have reached the ringing state (i.e., an AS-SIP 180 (Ringing) message or 183 (Session Progress) has been sent from the called party to the calling party, and the calling party is receiving an audible ringing tone) to fail when an internal failure occurs within that MG. This requirement was not tested on the SUT. This is a new UCR requirement for which the 18-month (July 2011) rule applies.

i. SG Requirements.

(1) SG and CCS7 network Interactions. The SG shall support signaling connectivity to the DoD CCS7 network based on UCR 2008, Section 5.2, Circuit-Switched Capabilities and Features, specifications for CCS7. This requirement was met via the CS2100 XA-Core SE09.1 MFS.

(2) SG Interactions with CCA. The SG shall support a supplier-specific interface to the CCA for interactions between the SG and CCA. This is a conditional requirement for MFSSs and was not tested on the SUT.

(3) SG Interworking Functions. The SG will terminate CCS7 links on its CCS7 side and transport the CCS7 call control and service control protocols (i.e., ISUP and TCAP) to the CCA. Similarly, the SG will receive CCS7 call control and service control messages from the CCA. The SG is responsible for the appropriate formatting of the messages for transmission on the CCS7 links. This is a conditional requirement for MFSSs and was not tested on the SUT.

j. Worldwide Numbering and Dialing Plan (WWNDP) Requirements.

(1) WWNDP. The precedence level and dialed number input to the PEI or AEI shall be as specified in UCR 2008, Section 5.2.3.5.1.2, Interswitch and Intraswitch Dialing. The SUT met all requirements for WWNDP for PEIs.

(2) DSN WWNDP. MFSSs must support DSN WWNDP and must support mapping of DSN telephone numbers to SIP URIs, following examples of DSN numbers using SIP URIs that use the syntax defined in RFC 3966. The SUT met all DSN WWNDP requirements.

k. Commercial Cost Avoidance (CCA). The LSC must use a Commercial Cost Avoidance functionality to route calls from an IP EI to a DSN E.164 number in a manner which will minimize commercial costs associated with PSTN calls. This requirement was tested and was partially met by the SUT. The SUT Ethernet interface configured for CCA queries to the RTS Routing Database Server support IPv6 for media but not signaling. The Vendor submitted an IPv6 LoC with noted discrepancies which include the interface for Commercial Cost Avoidance functionality. Open TDRs were adjudicated by DISA to have a minor operational impact with vendor submitted PoAM.

l. AS-SIP Based Support for External Devices (Voicemail, Unified Messaging, and Automated Receiving Devices). The LSC shall support all mandatory requirements in RFC 3842. The LSC shall support all mandatory requirements in IETF Internet Draft draft-levy-sip-diversion-08.txt, Diversion Indication in SIP. This is a conditional requirement. The JITC did not test any AS-SIP external devices.

m. Precedence Call Diversion. The AS-SIP signaling appliance shall divert all unanswered VoIP calls above the ROUTINE precedence level to a designated directory number (DN) for precedence call diversion. The SUT met all precedence call diversion requirements.

n. Attendant Station Features. The attendant station shall provide all of the services and features listed below. The SUT met all Attendant Station Features requirements.

(1) Precedence and Preemption. The RTS Attendant Console shall interoperate with PBAS/ASAC.

(2) Call Display. The RTS Attendant Console shall provide a visual display of each precedence level and the calling number, for incoming direct dialed calls to the attendant, and diverted calls to the attendant.

(3) Class of Service Override. If the LSC, MFSS, or WAN SS supports assignment of a CoS to an individual EI, then this appliance and the attendant console shall give the attendant the ability to override any incoming call's calling party CoS (based on calling area or precedence) on a call-by-call basis.

(4) Busy Override and Busy Verification. The appliance and the attendant console shall give the attendant the ability to verify and override a busy line condition.

(5) Night service. The appliance and the attendant console shall have the

ability to route all calls that are normally directed to the console to a separate night service deflection number.

(6) Automatic Recall of Attendant. When an attendant redirects an incoming call to a destination station, and that station is either busy or does not answer the call within a preset time, the appliance and the attendant console shall ensure that calling party on the redirected call is recalled automatically to the console.

(7) Calls in Queue to the Attendant. The appliance and the attendant console shall have the ability to place calls (both directed to the attendant and diverted to the attendant) into a waiting queue.

o. AS-SIP Requirements.

(1) SIP Requirements for AS-SIP Signaling Appliances and AS-SIP EIs. The MFSSs that support SIP EIs MUST comply with the differentiated set of requirements defined for SIP EIs if they serve SIP EIs, and MFSSs MUST comply with the differentiated set of requirements defined for H.323 and/or vendor-proprietary EIs if they serve H.323 and/or vendor-proprietary EIs. This requirement was not tested on the SUT. This represents a new feature in the UCR for which the 18-month rule applies. The vendor has until July 2011 to comply with this feature.

(2) SIP Session Keep-Alive Timer. The AS-SIP signaling appliances MUST support the keep-alive mechanism for SIP sessions in accordance with RFC 4028. The SUT met all keep-alive timer requirements.

(3) Session Description Protocol (SDP). A session description consists of a session-level description (details that apply to the whole session and all media streams) and optionally several media-level descriptions (details that apply to a single media stream). The MFSS must support SDP in accordance with RFC 2327. The SUT met all SDP requirements.

(4) Precedence and Preemption. The MFSS must meet the detailed requirements for the execution of preemption and the handling of precedence information as defined in UCR 2008 Change 1, Section 5.3.4.2.10. The SUT met all precedence and preemption requirements.

(5) Video Telephony – General Rules. Video calls must meet the detailed requirements for video telephony messaging as defined in UCR 2008 Change 1, Section 5.3.4.12. Video telephony requirements were tested and met by the SUT using softphone PC Clients.

(6) Calling Services. The MFSS must meet AS-SIP call flow requirements for calling services features as defined in UCR 2008 Change 1, Section 5.3.4.13. The SUT met all calling services call flow requirements

(7) SIP Translation Requirements for Inter-working AS-SIP Signaling Appliances. This specification uses SIP translation for converting between ISUP signaling and AS-SIP signaling but does not use SIP encapsulation of ISUP. This requirement applies to translations between AS-SIP and CCS7. This is a conditional requirement for MFSSs and was not tested on the SUT.

(8) Relevant Timers for the Terminating Gateway and the Originating Gateway. This requirement applies to gateways between AS-SIP and CCS7 links. This is a conditional requirement for MFSSs and was not tested on the SUT.

(9) SIP Requirements for Interworking AS-SIP Signaling Appliances. Interworking AS-SIP signaling appliances MUST comply with UCR 2008 Section 5.3.4.7.1, AS-SIP Signaling Appliances and AS-SIP EIs, as well as the additional general requirements in UCR 2008 Section 5.3.4.16. The SUT met all requirements for interworking AS-SIP signaling appliances.

(10) Keep-Alive Timer Requirements for Interworking AS-SIP Signaling Appliances. Interworking AS-SIP signaling appliances MUST comply with UCR 2008, Section 5.3.4.8, SIP Session Keep-Alive Timer, as well as the additional E1 requirements listed in UCR 2008 Section 5.3.4.17. The SUT met all keep-alive timer requirements for interworking AS-SIP signaling appliances.

(11) Precedence and Preemption Extensions for Interworking AS-SIP Signaling Appliances. The MFSS must meet all requirements for header fields as listed in UCR 2008 section 5.3.4.18. The SUT met all requirements for precedence and preemption extensions for interworking AS-SIP signaling appliances.

(12) Supplementary Services. The MFSS must meet call flow requirements as described in section 5.3.4.19 for supplementary services. The SUT met all supplementary services requirements.

p. IPv6 Requirements.

(1) Product Requirements. This requirement was test intra-enclave, and the vendor has submitted an LoC for IPv6, stating the SUT is not compliant with the following:

- IAD (MP 112/124): Their solution does not support IPv6 (Signaling or Media) with their MP112 and MP124 analog IADs. Per the UCR 2008 change 1, an MFSS MG is required to support IPv6 if the packets exit the enclave and they do.
- The SESM Core supports IPv4 only for signaling and both IPv4 and IPv6 dual stack for inter-enclave. The requirement is IPv6 and IPv4 for both signaling and media.
- The Audio Codes MG3K supports IPv4 only for signaling and both IPv4 and IPv6 dual stack for media intra and inter-enclave. The requirement is IPv6 and IPv4 for both signaling and media.

q. Network Management.

(1) MFSS Management Function. The MFSS Management function supports functions for MFSS Fault, Configuration, Accounting, Performance, and Security Management (FCAPS) management and audit logs. The SUT met all requirements for the MFSS Management Function via LoC.

(2) VVoIP NMS Interface Requirements. The physical interface between the DISA Voice and Video over IP (VVoIP) element management system (EMS) and the network components (i.e., LSC, MFSS, and EBC) is 10/100-Megabits per second (Mbps) Ethernet interface. The interface will work in either of the two following modes using auto-negotiation: Institute of Electrical and Electronics Engineers, Inc. (IEEE), Ethernet Standard 802.3, 1993; or IEEE, Fast Ethernet Standard 802.3u, 1995. The SUT meets all VVoIP NMS Interface Requirements.

(3) General Management Requirements. The SUT components shall each have an individual pair of Ethernet interfaces for management purposes, even in cases where the MFSS or LSC component contains multiple physical devices. The SUT met all general management requirements via LoC.

(4) Requirement for. The SUT must meet all general requirements for the FCAPS management functional areas as defined in UCR 2008 Section 5.3.2.17. The SUT does not meet FCAPS requirements. The SUT does not fully comply with the UCR Change 1 section 5.3.2.17.2. The SUT only supports SNMPv2 protected by IPSEC transport, while the UCR requires SNMPv3. The SUT does not download software automatically as required. The SUT can receive software electronically or physically, but does not automatically retrieve, install or rollback software updates. The SUT does not backup the software application during the backup procedure as required and this was adjudicated by DISA as having a minor operational impact.

(5) NM requirements of Appliance Functions. The SUT must meet all management requirements for ASAC, CCA, SG, and MG functions as defined in UCR 2008 Section 5.3.2.18. The SUT does not meet the NM requirements of appliance functions. The SUT does not download software automatically. The SUT electronically or physically, but does not automatically retrieve, install or rollback software updates. The SUT AudioCodes EMS is reachable by the Local EMS, but not by the VVoIP EMS. ADIMSS is not managing the LSC, so this access is provided only to the Local EMS. The UCR requires the EMS to be reachable by the VVoIP EMS. No consolidation of alarms is performed by the SUT to provide only root cause alarms as required. The suppression function is not supported by the SUT as required. The SUT MG keeps history for 2 intervals of 15 minutes, instead of the required current interval and 8 hours of history data. The SUT does not support management requirements for ASAC as defined in the UCR. This discrepancy was adjudicated by DISA as having a minor operational impact.

(6) Accounting Management. Accounting management identifies a set of events during which call detail information is collected. These events are call connect, call attempt, and call disconnect. When these events are detected, specific call data will be provided by the network appliances that were involved in the event. The SUT met all accounting management requirements via LoC.

11.3 Information Assurance. The IA report is published in a separate report, Reference (e).

11.4 Other. None

12. TEST AND ANALYSIS REPORT. No detailed test report was developed in accordance with the Program Manager's request. JITC distributes interoperability information via the JITC Electronic Report Distribution (ERD) system, which uses Unclassified-But-Sensitive Internet Protocol Router Network (NIPRNet) e-mail. More comprehensive interoperability status information is available via the JITC System 2-7 Tracking Program (STP). The STP is accessible by .mil/gov users on the NIPRNet at https://stp.fhu.disa.mil. Test reports, lessons learned, and related testing documents and references are on the JITC Joint Interoperability Tool (JIT) at http://jit.fhu.disa.mil (NIPRNet). Information related to DSN testing is on the Telecom Switched Services Interoperability (TSSI) website at http://jitc.fhu.disa.mil/tssi.

(This page left intentionally blank.)

SYSTEM FUNCTIONAL AND CAPABILITY REQUIREMENTS

The local session controllers have required and conditional features and capabilities that are established by the Unified Capabilities Requirements (UCR). The System Under Test (SUT) need not provide conditional requirements. If they are provided, they must function according to the specified requirements. The detailed Functional requirements (FR) and Capability Requirements for Internet Protocol Call Control products (Multi-Function SoftSwitch (MFSS), Local Session Controller (LSC), and Wide Area Network SoftSwitch (WAN SS) are listed in Table 3-1. Detailed Information Assurance (IA) requirements are included in Reference (e) and are not listed below.

Table 3-1. Unified Capabilities Products Capability/Functional Requirements Table

ID	Requirement	UCR Ref (UCR 2008 CH1)	MFSS	LSC	WAN SS
1	As part of the session setup process, the LSC controls what DSCP to use in the subsequent session media stream packets. (two sub requirements)	5.3.2.2.1.4	Y	Y	
2	The SUT must provide the following features: Precedence Call Waiting, Call Forwarding, Call Transfer, Call Hold, Three-Way Calling, Hotline Service, and Calling Party and Called Party ID.	Table 5.3.2.2-1	Y	Y	
3	Calls to a DN that does not have any CF feature activated shall be delivered to the DN EI IAW the MLPP procedures specified in UCR 2008, Section 5.2.2 Multilevel Precedence and Preemption	5.3.2.2.2.1.1	Y	Y	
4	Call forwarding, when activated on a line DN, shall allow any terminating call at a ROUTINE DSN precedence level, to be completed to the designated destination (IAW the call forward options activated), and shall comply with the requirements as stated in Telcordia Technologies GR-217-CORE, GR-580-CORE, and GR-586-CORE.	5.3.2.2.2.1.1	Y	Y	
5	Calls to 911 shall be preempted in accordance with assured service priority rules specified in UCR 2008, Section 5.2.2, Multilevel Precedence and Preemption.	5.3.2.2.2.2.1	Y	Y	
6	The Tracing of Terminating Calls feature identifies the calling number on intraoffice and interoffice calls terminating to a specified DN. When this feature is activated, the originating DN, the terminating DN, and the time and date are printed out for each call to the specified line.	5.3.2.2.2.2.2	Y	Y	
7	The Outgoing Call Tracing feature allows the tracing of nuisance calls to a specified DN suspected of originating from a given local office. The tracing is activated when the specified DN is entered. A printout of the originating DN, and the time and date, are generated for every call to the specified DN.	5.3.2.2.2.2.3	Y	Y	
8	The Tracing of a Call in Progress feature identifies the originating DN for a call in progress. Authorized personnel entering a request that includes the specific terminating DN involved in the call activate the feature.	5.3.2.2.2.2.4	Y	Y	
9	The Tandem Call Trace feature identifies the incoming trunk of a tandem call to a specified office DN. The feature is activated by entering the specified distant office DN for a tandem call trace. A printout of the incoming trunk number and terminating DN, and the time and date, is generated for every call to the specified DN.	5.3.2.2.2.2.5	Y	Y	
10	One voice session budget unit shall be equivalent to 110 kilobits per second (kbps) of access circuit bandwidth independent of the PEI or AEI codec used. This includes ITU-T Recommendation G.711 encoding rate plus Internet Protocol Version 6 (IPv6) packet overhead plus ASLAN Ethernet overhead. IPv6 overhead, not IPv4 overhead, is used to determine bandwidth equivalents here.	5.3.2.2.2.3.1	Y	Y	
11	If the MFSS's count of an IPC is greater than or equal to the corresponding IPB, and it receives an INVITE request for a precedence session, the MFSS shall preempt a lower priority session (if such a	5.3.2.2.2.3.1.2	Y		

Table 3-1. Unified Capabilities Products Capability/Functional Requirements Table (continued)

ID	Requirement	UCR Ref (UCR 2008 CH1)	MFSS	LSC	WAN SS
	session exists), and then proceed with processing the higher precedence session connect request.				
12	If the MFSS receives a CCA-ID for which there is no entry in ASAC budget table, the SS will reject the session and generate an alarm for the EMS.	5.3.2.2.2.3.1.2	Y		
13	If necessary, the MFSS will preempt for a session request that is at precedence level FLASH OVERRIDE or FLASH and the counts equal the budgets.	5.3.2.2.2.3.2	Y		
14	Registration and authentication between NEs shall follow the requirements set forth in UCR 2008, Section 5.4, Information Assurance Requirements.	5.3.2.3.1	Y	Y	
15	The LSCs shall be registered to a primary and backup MFSS. In case of failure of the primary MFSS, the LSC will default to the backup MFSS.	5.3.2.3.2	Y	Y	
16	The LSC shall send an OPTIONS request with a Request-URI identifying the primary SS (the Request-URI does not have a userinfo part) on a configurable periodic time interval (default equals 45 seconds; minimum time interval equals 35 seconds). (4 sub requirements)	5.3.2.3.2.2		Y	
17	When a properly functioning primary SS receives the OPTIONS request from a served LSC, the primary SS shall respond with a 200 OK response that includes the Accept header and the Supported header.	5.3.2.3.2.2	Y		Y
18	When the LSC sends a defined configurable number of successive OPTIONS requests (default equals 2) for which there either is no response or the response is a 408 (Request Time-Out), 503 (Service Unavailable), or 504 (Server Time-Out) response, then it must failover to the secondary SS. (3 sub requirements)	5.3.2.3.2.3		Y	
19	If the LSC receives a 200 OK response to an OPTIONS request from the primary SS before the configurable number of successive failures to the OPTIONS requests (default equals 2) has been reached, then no action is taken to failover to the secondary SS.	5.3.2.3.2.3		Y	
20	Upon failover, the LSC will send OPTIONS requests to the primary SS at a failback configurable periodic time interval (default equals 60 seconds; minimum time interval equals 35 seconds). (4 sub requirements)	5.3.2.3.2.4		Y	
21	Each SS shall send an OPTIONS request to every other SS on a “standard” configurable periodic time interval (default equals 45 seconds; minimum time interval equals 35 seconds).	5.3.2.3.2.5	Y		Y
22	Whenever an originating SS sends an INVITE request to another SS and receives either a 408 (Request Time-Out), 503 (Service Unavailable), or 504 (Server Time-Out) response and the originating SS is not already awaiting a response to a pending OPTIONS request to the other SS, then the originating SS shall send an OPTIONS request with a Request-URI identifying the SS.	5.3.2.3.2.5	Y		Y
23	When a properly functioning SS receives the OPTIONS request, the SS shall respond with a 200 OK response that includes the Accept header and the Supported header.	5.3.2.3.2.5	Y		Y
24	Each MFSS (SS) shall be configured with knowledge of each pair of SSs that act as backups for each other. (7 sub requirements)	5.3.2.3.2.6	Y		Y
25	Upon failover, the SS will send OPTIONS requests to the failed SS at a “failback” configurable periodic time interval (default equals 60 seconds; minimum time interval equals 35 seconds). (5 sub requirements)	5.3.2.3.2.7	Y		Y
26	The Assured Services subsystem shall have a hardware/software availability of 0.99999 (nonavailability of no more than 5 minutes per year).	5.3.2.5.2.1	Y	Y	
27	The performance parameters associated with the ASLAN, MFSS, and LSC, when combined, shall meet the following maximum downtime requirements: • IP (10/100 Ethernet) network links – 35 minutes/year • IP subscriber – 12 minutes/year	5.3.2.5.2.2	Y	Y	

Table 3-1. Unified Capabilities Products Capability/Functional Requirements Table (continued)

ID	Requirement	UCR Ref (UCR 2008 CH1)	MFSS	LSC	WAN SS
28	For these VoIP devices, the voice quality shall have a MOS of 4.0 (R-Factor equals 80) or better, as measured in accordance with the E-Model. Additionally, these devices shall not lose two or more consecutive packets in a minute and shall not lose more than seven voice packets (excluding signaling packets) in a 5-minute period.	5.3.2.5.4	Y	Y	
29	An IP voice instrument shall be designed in accordance with the acquiring activity requirements, but the following capabilities are specifically required as indicated: • **[Objective]** DoD Common Access Card (CAC) reader • **[Required]** Display calling number • **[Required]** Display precedence level of the session • **[Required]** Support for Dynamic Host Configuration Protocol (DHCP).	5.3.2.6.1	Y	Y	
30	Tones and announcements, as required in UCR 2008, Sections 5.2.4.5.2, DSN Information Signals, and Section 5.2.2.1.3, Announcements, shall be supported, except for the loss of C2 announcement.	5.3.2.6.1.1	Y	Y	
31	The product shall support the origination and termination of a voice session using the following codecs: • ITU-T Recommendation G.711, to include both the μ-law and A-law algorithms • ITU-T Recommendation G.723.1 • ITU-T Recommendation G.729 or G.729A • ITU-T Recommendation G.722.1	5.3.2.6.1.2	Y	Y	
32	Voice over IP PEIs or AEIs (i.e., handset, headset, and hands-free types) shall comply with TIA-810-B, November 3, 2006.	5.3.2.6.1.3	Y	Y	
33	For Fixed-to-Fixed calls, the product shall use 20 ms as the default voice sample length, and as the basis for the voice payload packet size.	5.3.2.6.1.4	Y	Y	
34	The PEI or AEI shall be capable of authenticating itself to its associated LSC and vice versa.	5.3.2.6.1.5 5.3.2.6.2.3	Y	Y	
35	Analog instruments, including secure analog EIs, analog facsimile EIs, and analog modem EIs, shall be supported by the LSC either by a TA or an Integrated Access Device (IAD) connected to an Ethernet port.	5.3.2.6.1.6	Y	Y	
36	The LSC shall meet all the requirements for PBAS/ASAC, as appropriate for VoIP and Video over IP services, as specified in UCR 2008, Section 5.2.2, Multilevel Precedence and Preemption.	5.3.2.7.2.1		Y	
37	The LSC shall support CND, as specified in UCR 2008, Section 5.2.3.5.1.8.2, Calling Number Delivery.	5.3.2.7.2.2		Y	
38	The LSC must provide signaling on the line side for local intra-enclave subscriber-to-subscriber calls, and trunk-side signaling for calls between an external enclave and a local subscriber.	5.3.2.7.2.3		Y	
39	In the event that a total loss of connectivity to the DISN WAN occurs, the LSC shall provide the following functions: • Completion of local (intra-enclave) calls • Routing of calls to the PSTN using a local MG (PRI or CAS as required by the local interface) • User look-up of local directory information	5.3.2.7.2.4		Y	
40	The LSC Management function supports functions for LSC FCAPS management and audit logs. Collectively, these functions are called FCAPS Management and Audit Logs.	5.3.2.7.2.6		Y	
41	The LSC Transport Interface functions provide interface and connectivity functions with the ASLAN and its IP packet transport network.	5.3.2.7.2.7		Y	
42	The LSC shall provide an interface to the DISA NMS. The interface consists of a 10/100-Mbps Ethernet connection	5.3.2.7.2.8		Y	
43	Periodically, the LSC shall verify the status of its registered and authenticated IP EIs, including operator (dial service attendant) consoles. The verification interval shall be configurable with the default set at 5 minutes.	5.3.2.7.2.10		Y	

Table 3-1. Unified Capabilities Products Capability/Functional Requirements Table (continued)

ID	Requirement	UCR Ref (UCR 2008 CH1)	MFSS	LSC	WAN SS
44	Line-side custom features must not interfere with the Assured Services requirements.	5.3.2.7.2.11		Y	
45	During the call establishment process, the product shall be capable of preventing or detecting and stopping hair-pin routing loops over ANSI T1.619a and commercial PRI trunk groups (i.e., T1 PRI and E1 PRI) between a legacy switch (e.g., TDM EO) and an LSC	5.3.2.7.3		Y	
46	When the AS-SIP TDM Gateway receives a call request over an ISDN MLPP PRI then the AS-SIP TDM Gateway MUST map the telephony numbers received from the Q.931 SETUP message to SIP URIs	5.3.2.7.4.3.3	Y	Y	
47	The AS-SIP TDM Gateway MG MUST support the ITU-T Recommendation G.711 (μ-law and A-law) audio codec.	5.3.2.7.4.3.4	Y	Y	
48	The AS-SIP TDM Gateway MG MUST support RFC 4040 and the AS-SIP TDM Gateway MUST support the signaling for establishing the 64kbps unrestricted bearer per Section 5.3.4.7.7, 64 kbps Transparent Calls (Clear Channel).	5.3.2.7.4.3.4	Y	Y	
49	The AS-SIP TDM Gateway MG MUST support T.38 Fax Relay	5.3.2.7.4.3.4	Y	Y	
50	The AS-SIP TDM Gateway MG MUST support the SCIP-216 subset of V.150.1 Modem Relay (see Section 5.3.2.21.2, RTS SCIP Gateway Requirements) and the AS-SIP TDM Gateway MUST support the AS-SIP signaling requirements in support of modem relay	5.3.2.7.4.3.4	Y	Y	
51	The AS-SIP TDM Gateway MUST satisfy the Information Assurance requirements in Section 5.4 Information Assurance for a media gateway. This feature is covered in separate IA report.	5.3.2.7.4.3.5	Y	Y	
52	The AS-SIP TDM Gateway MUST provide an interface to the DISA NMS. The interface MUST consist of a 10/100-Mbps Ethernet connection	5.3.2.7.4.3.9	Y	Y	
53	The AS-SIP IP Gateway MUST implement call count thresholds for voice sessions and for video sessions in order to perform Session Admission Control (SAC).	5.3.2.7.5.1.1	Y	Y	
54	The requirements for the TDM side of the MFSS are entirely the same as for the DSN MFS specified in UCR 2008, Section 5.2, Circuit-Switched Capabilities and Features. The TDM side of the MFSS must meet these requirements.	5.3.2.8.2.1	Y		
55	MFSS shall support PRI signaling for TDM communication with other systems.	5.3.2.8.2.3	Y		
56	The TDM side of the MFSS shall support CCS7 signaling for communication with other TDM systems.	5.3.2.8.2.3	Y		
57	MFSS shall support AS-SIP signaling for IP communication with other MFSSs and LSCs.	5.3.2.8.2.3	Y		
58	The MFSS shall provide internal signaling and media conversion for calls between the TDM side and SS side of the MFSS.	5.3.2.8.2.3	Y		
59	The CCA/SG/MGC/MG complex in the SS side of the MFSS needs to interface and interact with the EO and Tandem functions in the TDM side of the MFSS.	5.3.2.8.2.4	Y		
60	The MFSS MG must support internal MG connections that interconnect the SS side of the MFSS with the EO and Tandem functions on the TDM side of the MFSS.	5.3.2.8.2.4	Y		
61	The MFSS MG shall interact with the MFSS MGC so that Internal MG connections between the SS and TDM sides of the MFSS support (1) Intra-MFSS calls between TDM EIs connected to the TDM side, and PEIs/AEIs connected to the SS side of the MFSS (2) Incoming and outgoing calls to/from systems external to the MFSS that require conversion between TDM and IP	5.3.2.8.2.4	Y		

Table 3-1. Unified Capabilities Products Capability/Functional Requirements Table (continued)

ID	Requirement	UCR Ref (UCR 2008 CH1)	MFSS	LSC	WAN SS
62	When a U.S. ISDN PRI-based connection is used between the SS and TDM sides of the MFSS, the MFSS MG shall interact with the MFSS MGC so that U.S. ISDN PRI signaling (National ISDN PRI signaling with the Precedence Level IE and related MLPP IEs included) is used between the softswitch and TDM sides, and the T1.619/T1.619a version of the ISDN PRI MLPP feature operates correctly between the SS and TDM sides of the MFSS, for both VoIP-to-TDM calls and TDM-to-VoIP calls over this trunk group.	5.3.2.8.2.4	Y		
63	The SS side of the MFSS shall meet all the requirements for MLPP, as appropriate for VoIP and Video over IP services, as specified in Section 5.2.2, Multilevel Precedence and Preemption.	5.3.2.8.2.6	Y		
64	The SS side of the MFSS shall support CND as specified in UCR 2008, Section 5.2.3.5.1.8.2, Calling Number Delivery.	5.3.2.8.2.6	Y		
65	The requirements for SCS functions (i.e., CCA, IWF, MG, MGC, and SG) and NM are provided in separate sections of this document. The MFSS must meet all these requirements.	5.3.2.8.2.6	Y		
66	The CCA IWF must support AS-SIP and ISDN PRI protocols.	5.3.2.9.2.1	Y	Y	
67	The MGC within the CCA must control all MGs within the LSC or MFSS, support DoD ISDN trunks, control all signaling and media streams on each trunk within each MG, and accept IP-encapsulated singaling streams from an SG or MG.	5.3.2.9.2.2	Y	Y	
68	The CCA shall be responsible for controlling all the SGs within the MFSS and LSC.	5.3.2.9.2.3	Y	C	
69	The CCA shall be responsible for controlling each signaling link within each SG within the MFSS or LSC.	5.3.2.9.2.3	Y	C	
70	The CCA shall be responsible for controlling the DoD CCS7 signaling stream(s) within each signaling link within each SG.	5.3.2.9.2.3	Y	C	
71	Within the network appliance (i.e., MFSS and LSC), the CCA shall use either an IETF-standard set of CCS7-over-IP protocols, or a supplier-proprietary protocol to accomplish the above SG, signaling link, and signaling stream controls.	5.3.2.9.2.3	Y	C	
72	The CCA IWF shall support the AS-SIP protocol consistent with the detailed AS-SIP protocol requirements in Section 5.3.4, AS-SIP Requirements.	5.3.2.9.5.1	Y	Y	
73	The CCA IWF shall use the AS-SIP protocol on LSC-MFSS and MFSS-MFSS sessions.	5.3.2.9.5.1	Y	Y	
74	When the CCA IWF uses the AS-SIP protocol over the Access Segment between the EBC and the DISN WAN, or over the DISN WAN itself, the CCA IWF shall secure the AS-SIP protocol using TLS.	5.3.2.9.5.1	Y	Y	
75	The CCA IWF shall support the U.S./National ISDN version of the ISDN PRI protocol.	5.3.2.9.5.3	Y	Y	
76	The CCA IWF shall support reception of ISDN PRI messages from the MG and transmission of ISDN PRI messages to the MG.	5.3.2.9.5.3	Y	Y	
77	The CCA IWF shall be able to determine the ISDN PRI (and its D-Channel signaling link) that an incoming PRI message was received on, when processing an incoming PRI message from the MG.	5.3.2.9.5.3	Y	Y	
78	The CCA IWF shall be able to identify the ISDN PRI (and its D-Channel signaling link) that an outgoing PRI message will be sent on, when generating an outgoing PRI message to the MG.	5.3.2.9.5.3	Y	Y	
79	The CCA IWF shall be able to support multiple ISDN PRIs (and their D-Channel signaling links) at the MG, where each PRI is connected to a different PRI end point.	5.3.2.9.5.3	Y	Y	
80	The CCA IWF shall be able to differentiate between the individual ISDN PRIs (and their D-Channel signaling links) at the MG.	5.3.2.9.5.3	Y	Y	
81	The CCA IWF shall support the full set of ISDN MLPP requirements in ANSI T1.619 and ANSI T1.619a.	5.3.2.9.5.3	Y	Y	

Table 3-1. Unified Capabilities Products Capability/Functional Requirements Table (continued)

ID	Requirement	UCR Ref (UCR 2008 CH1)	MFSS	LSC	WAN SS
82	The CCA IWF shall not support any of the ISDN MLPP requirements in ANSI T1.619 and ANSI T1.619a, on ISDN PRIs to TDM PBXs and switches in the U.S. PSTN.	5.3.2.9.5.3	Y	Y	
83	On ISDN PRIs from the CCA/MG to TDM PBXs and switches in allied and coalition partners (where those networks support U.S. "National ISDN" PRI), the CCA IWF shall support a DoD-user-configurable per-PRI option that allows the PRI to support or not support the ANSI T1.619/619a PRI MLPP feature on calls to and from that PRI.	5.3.2.9.5.3	Y	Y	
84	The CCA IWF shall be able to associate individual PRI configuration data with each individual PRI served by the MG and the CCA. The CCA IWF shall not require groups of PRIs served by the MG and the CCA to share "common" PRI configuration data.	5.3.2.9.5.3	Y	Y	
85	The CCA IWF shall support supplier-proprietary Voice and Video EIs and their associated proprietary EI signaling protocols.	5.3.2.9.5.5	Y	Y	
86	The CCA in the LSC, MFSS, and WAN SS shall not allow AS-SIP sessions that have reached the ringing state (i.e., an AS-SIP 180 (Ringing) message or 183 (Session Progress) has been sent from the called party to the calling party, and the calling party is receiving an audible ringing tone) to fail when an internal failure occurs within the CCA.	5.3.2.9.6	Y	Y	
87	The MFSS CCA shall be able to support MG connections between the SS side of the MFSS and the EO and Tandem functions on the TDM side of the MFSS.	5.3.2.10.1	Y		
88	The CCA shall support assignment of the following items to itself: • Only one CCA IP address (this one IP address may be implemented in the CCA as either a single logical IP address or a single physical IP address), • A CCA Fully Qualified Domain Name (FQDN) that maps to that IP address, and • A CCA SIP URI that uses that CCA FQDN as its domain name, and maps to the "SIP B2BUA" function within the CCA itself.	5.3.2.10.3	Y	Y	
89	The CCA shall support assignment of the following items to each SIP and AS-SIP PEI and AEI on the Appliance LAN: • Only one PEI or AEI IP address, • A PEI or AEI FQDN that maps to that IP address, and • A PEI or AEI SIP URI that uses that PEI or AEI FQDN as its domain name, and maps to the "SIP User Agent" function within the PEI or AEI.	5.3.2.10.3	Y	Y	
90	The CCA shall support assignment of the following items to each MG on the Appliance LAN: • Only one MG IP address (this one IP address may be implemented in the MG as either a single logical IP address or a single physical IP address), • An MG FQDN that maps to that IP address, and • An MG SIP URI that uses that MG FQDN as its domain name, and maps to the "UC Signaling and Media End Point" function within the MG.	5.3.2.10.3	Y	Y	
91	The CCA shall support assignment of the following items to each SG on the Appliance LAN: • Only one SG IP address (this one IP address may be implemented in the SG as either a single logical IP address or a single physical IP address), • An SG FQDN that maps to that IP address, and • An SG SIP URI that uses that SG FQDN as its domain name, and maps to the "UC Signaling End Point" function within the SG	5.3.2.10.3	Y	C	
92	The CCA shall support assignment of the following items to the EBC: • Only one EBC IP address (this one IP address may be implemented in the EBC as either a single logical IP address or a single physical IP address), • An EBC FQDN that maps to that IP address, and • An EBC SIP URI that uses that EBC FQDN as its domain name, and maps to the "SIP B2BUA" function within the EBC.	5.3.2.10.3	Y	Y	
93	When directing VoIP sessions to other network appliances providing voice and video services across the DISN, the CCA shall direct these VoIP sessions to the EBC, so that the EBC can process them before	5.3.2.10.4	Y	Y	

Table 3-1. Unified Capabilities Products Capability/Functional Requirements Table (continued)

ID	Requirement	UCR Ref (UCR 2008 CH1)	MFSS	LSC	WAN SS
	directing them to the network appliances on the DISN WAN.				
94	When accepting VoIP sessions from other network appliances on the DISN, the CCA shall accept these VoIP sessions from the EBC, because the EBC relays them from the network appliances on the DISN WAN.	5.3.2.10.4	Y	Y	
95	The LSC and MFSS CCA shall meet all the requirements in Section 5.3.2.2.2.3, ASAC – Open Loop. The LSC and MFSS CCA shall meet all the requirements in Section 5.3.4.10, Precedence and Preemption. The LSC and MFSS CCA shall meet all the requirements in Section 5.3.4.11, Policing of Call Count Thresholds.	5.3.2.10.5	Y	Y	
96	The CCA shall generate a redirecting number each time it forwards a VoIP or Video session request as part of a Call Forwarding feature.	5.3.2.10.6	Y	Y	
97	It is expected that all Assured Services products, such as LSCs and MFSSs, will support vendor-proprietary VVoIP features and capabilities, in addition to supporting the required VVoIP features and capabilities that are listed.	5.3.2.10.6	Y	Y	
98	The CCA shall relay received SIP and TLS authentication credentials and encryption key information from sending end systems (i.e., users, PEIs, AEIs, and EBCs) to the Information Assurance function to support the Information Assurance function's user, PEI, AEI, and EBC authentication capabilities, and its PEI, AEI, and EBC signaling stream encryption capabilities.	5.3.2.10.7	Y	Y	
99	The CCA MGC shall relay received H.248 and IPSec (or proprietary-protocol-equivalent) authentication credentials and encryption key information from sending end systems (i.e., MGs and SGs) to the Information Assurance function to support the Information Assurance function's MG and SG authentication capabilities, and its MG and SG signaling stream encryption capabilities.	5.3.2.10.7	Y	Y	
100	The CCA shall relay authentication credentials received in a SIP or AS-SIP REGISTER message from an PEI, AEI, or EBC to the Information Assurance function.	5.3.2.10.7	Y	Y	
101	The CCA shall relay TLS encryption key information received from a PEI or AEI to the Information Assurance function so the Information Assurance function can verify that this encryption key information can be used on the signaling streams for Voice or Video sessions to/from that PEI or AEI.	5.3.2.10.7	Y	Y	
102	The CCA shall relay TLS encryption key information received from an EBC to the Information Assurance function so the Information Assurance function can verify that this encryption key information can be used on the signaling streams for the Voice or Video sessions to/from that EBC.	5.3.2.10.7	Y	Y	
103	The CCA within the appliance shall support all Information Assurance Appliance requirements in Section 5.4, Information Assurance Requirements, which involve the appliance's SCS functions and the appliance's MGC.	5.3.2.10.7	Y	Y	
104	The CCA shall support supplier-proprietary Voice and Video EIs, using EI-CCA protocols that are proprietary to the LSC or MFSS supplier.	5.3.2.10.10	Y	Y	
105	When the CCA IWF supports AS-SIP Voice and Video AEIs, the IWF shall support these AEIs using the set of AS-SIP protocol requirements in Section 5.3.2.22, Generic AS-SIP End Instrument and Video Codec Requirements, and Section 5.3.4, AS-SIP Requirements.	5.3.2.10.10	Y	Y	
106	The Appliance CCA (i.e., LSC or MFSS) shall support both assured Voice and Video services. The CCA shall support both assured Voice and assured Video sessions, and shall support these sessions from both VoIP EIs and Video EIs, as described in UCR 2008, Section 5.3.2.10.10, CCA Interactions with End Instrument(s).	5.3.2.10.11	Y	Y	
107	The Appliance CCA shall support common procedures and protocol for VoIP and Video session control.	5.3.2.10.11	Y	Y	
108	The Appliance CCA shall support common procedures and protocol for feature control, for the features and capabilities given in Table 5.3.2.2-1, Assured Services Product Features and Capabilities.	5.3.2.10.11	Y	Y	

Table 3-1. Unified Capabilities Products Capability/Functional Requirements Table (continued)

ID	Requirement	UCR Ref (UCR 2008 CH1)	MFSS	LSC	WAN SS
109	On calls to and from Proprietary VoIP and Proprietary Video EIs, the CCA shall use the appropriate parameters within the appliance supplier's Proprietary protocol messages to differentiate Proprietary VoIP sessions from Proprietary Video sessions.	5.3.2.10.11	Y	Y	
110	When AS-SIP EIs are supported on calls to and from AS-SIP EIs, the CCA shall use the SDP message bodies in AS-SIP INVITE, UPDATE, REFER, and ACK messages, as well as the SDP message bodies in AS-SIP 200 OK responses and earlier 1xx provisional responses, to differentiate AS-SIP Voice sessions from AS-SIP Video sessions.	5.3.2.10.11	Y	Y	
111	The CCA shall track VoIP sessions against corresponding Appliance VoIP budgets, and shall separately track Video sessions against corresponding Video budgets. The CCA shall maintain the Appliance's VoIP budgets separate from the Appliance's Video budget.	5.3.2.10.11	Y	Y	
112	As part of LSC-Level ASAC and WAN-Level ASAC Policing, the CCA shall support PBAS/ASAC for both VoIP sessions and Video sessions.	5.3.2.10.11	Y	Y	
113	The CCA shall allow an individual EI to support both VoIP and Video sessions. The CCA shall allow an individual EI to have both VoIP and Video sessions active at the same time.	5.3.2.10.11	Y	Y	
114	The CCA shall support the routing of both VoIP and Video session requests from LSCs to MFSSs, from MFSSs to LSCs, and from MFSSs to MFSSs, using AS-SIP. The CCA shall direct outgoing VoIP and Video session requests to EBCs, and shall accept incoming VoIP and Video session requests from EBCs, consistent with this LSC-to-MFSS routing, MFSS-to-LSC routing, and MFSS-to-MFSS routing.	5.3.2.10.11	Y	Y	
115	The CCA shall support the ability to remove VoIP and Video sessions and session requests from the media server so the CCA can continue with necessary session processing once the media server has completed its functions.	5.3.2.10.12	Y	Y	
116	The MG supports interconnection of VoIP, FoIP, and MoIP media streams with the following LSC functions and end-user devices: a. The LSC media server, which provides tones and announcements for LSC calls and LSC features b. AS-SIP VoIP, FoIP, and MoIP AEIs on the LSC	5.3.2.12.3.1		Y	
117	The MFSS MG shall be able to support MG trunk groups (referred to as internal MG connections) that either interconnect the SS (VoIP) side of the MFSS with the EO or Tandem functions on the TDM side of the MFSS.	5.3.2.12.3.2.1	Y		
118	On incoming call requests to a TDM trunk group, where the CCA/MGC applies a CAC Call Denial treatment to that call request, the MG shall connect the TDM called party on the incoming call request to the appropriate CAC Call Denial tone or announcement when instructed to do so by the MGC.	5.3.2.12.4.1.1	Y	Y	
119	On incoming calls or call requests to a TDM trunk group, where the CCA/MGC applies an ASAC Call Preemption treatment to that call or call request, the MG shall connect the TDM calling party on the incoming call or call request to the appropriate ASAC Call Preemption tone or announcement when instructed to do so by the MGC.	5.3.2.12.4.1.1	Y	Y	
120	On outgoing calls or call requests from a TDM trunk group, where the CCA/MGC applies an ASAC Call Preemption treatment to that call or call request, the MG shall connect the TDM called party on the outgoing call or call request to the appropriate ASAC Call Preemption tone or announcement when instructed to do so by the MGC.	5.3.2.12.4.1.1	Y	Y	
121	Each MG within an appliance shall support all the appliance requirements in Section 5.4, Information Assurance Requirements, that involve an Appliance MG.	5.3.2.12.4.2	Y	Y	
122	When instructed to do so by the MGC, the MG shall direct TDM calls and call requests to the media server.	5.3.2.12.4.3	Y	Y	
123	Since each Appliance MG is an IP endpoint on the Appliance LAN, each MG shall support assignment of the following items to itself: • Only one MG IP address (This one IP address may be implemented in the CCA as either a single logical IP address or a single physical IP address.) • An MG FQDN that maps to that IP address • An MG SIP URI that uses that MG FQDN as its domain name, and	5.3.2.12.4.4	Y	Y	

Table 3-1. Unified Capabilities Products Capability/Functional Requirements Table (continued)

ID	Requirement	UCR Ref (UCR 2008 CH1)	MFSS	LSC	WAN SS
	maps to a "SIP User Agent" function within the MG.				
124	The MG shall interact with the Transport Interface functions in the appliances when the MG uses the native LAN protocols, IP, and UDP to exchange SRTP media streams with PEIs, AEIs, other MGs, and the EBC over the Appliance LAN	5.3.2.12.4.4	Y	Y	
125	When sending VoIP media streams to PEIs or AEIs and MGs served by other network appliances, the MG shall direct these VoIP media streams to the EBC so the EBC can process them before sending them on to the remote PEIs or AEIs and MGs via the DISN WAN.	5.3.2.12.4.5	Y	Y	
126	When accepting VoIP media streams from PEIs or AEIs and MGs served by other network appliances, the MG shall accept these VoIP media streams from the appliance EBC, because the EBC relays them from the DISN WAN and the remote PEIs or AEIs and MGs on the DISN WAN. The MG shall recognize and act on the network-level IP addresses of the remote PEIs or AEIs and MGs, when accepting the VoIP sessions through the EBC from the DISN WAN and the remote PEIs or AEIs and MGs.	5.3.2.12.4.5	Y	Y	
127	The MG shall support the exchange of VoIP media streams with the following voice PEIs and AEIs both on the local appliance and on remote network appliances: a. Supplier-proprietary voice PEIs b. Voice SIP EIs, when the appliance supplier supports these EIs c. Voice H.323 EIs, when the appliance supplier supports these EIs d. Voice AS-SIP AEIs	5.3.2.12.4.8	Y	Y	
128	The MG shall support the operation of the following features for VoIP and Video end users, consistent with the operation of this feature on analog and ISDN lines in DoD TDM switches today: • Call Hold • Music on Hold • Call Waiting • Precedence Call Waiting • Call Forwarding Variable • Call Forwarding Busy Line • Call Forwarding No Answer • Call Transfer • Three-Way Calling • Hotline Service • Calling Party and Called Party ID (number only) • Call Pickup	5.3.2.12.4.9	Y	Y	
129	Each appliance MG shall support TDM trunk groups that can interconnect with the following NEs in DoD networks, in the United States and worldwide: • PBXs • SMEOs • EOs • MFSs Media Gateway support for these TDM trunk groups shall be identical to the support for these trunk groups in DoD TDM PBXs, EOs, Tandem switches, and MFSs today, as specified in UCR 2008, Section 5.2, Circuit-Switched Capabilities and Features.	5.3.2.12.5	Y	Y	
130	Each appliance MG shall support TDM trunk groups that can interconnect with NEs in the PSTN in the United States, including CONUS, Alaska, Hawaii, and U.S. Caribbean and Pacific Territories. Media Gateway support for these TDM trunk groups to the U.S. PSTN shall be identical to the support for these trunk groups in DoD TDM PBXs, EOs, Tandem Switches, and MFSs today, as specified in UCR 2008, Section 5.2, Circuit-Switched Capabilities and Features.	5.3.2.12.7	Y	Y	
131	The MG shall support foreign country ISDN PRI, where the MG handles both the media channels and the signaling channel: 1. For interconnection with a foreign country PSTN using foreign country ISDN PRI, from the country where the DoD user's B/P/C/S is located. 2. Support for ETSI PRI is required on LSC trunk groups when the LSC	5.3.2.12.8	Y	Y	

Table 3-1. Unified Capabilities Products Capability/Functional Requirements Table (continued)

ID	Requirement	UCR Ref (UCR 2008 CH1)	MFSS	LSC	WAN SS
	is used in OCONUS ETSI-compliant countries. 3. Support for ETSI PRI is required on MFSS trunk groups when the MFSS is used in OCONUS ETSI-compliant countries. 4. Support for MLPP using ISDN PRI is not required on the above trunk groups.				
132	The MG shall support ISDN PRI trunk groups that carry the U.S./National ISDN version of the ISDN PRI protocol. The MG shall support these U.S. PRI trunk groups conformant with the detailed U.S. ISDN PRI requirements.	5.3.2.12.10	Y	Y	
133	The MG shall support multiple U.S. PRI trunk groups based on the needs of the DoD user deploying the appliance. The MG shall allow each U.S. PRI trunk group at the MG to connect to: TDM EO and tandem components of the local MFSS; a different U.S. PSTN TDM NE (e.g., PBX, TDM switch); a different DoD TDM NE (e.g., PBX, TDM switch); or a different DoD IP NE (e.g., LSC, MFSS), based on the interconnection needs of the DoD user.	5.3.2.12.10	Y	Y	
134	The MG shall support reception of ISDN PRI messages from the CCA MGC and transmission of ISDN PRI messages to the CCA MGC.	5.3.2.12.10	Y	Y	
135	The MG shall connect to the ASLAN of the appliance using the physical layer and data link layer protocols of the ASLAN. In this case, the MG shall appear to the MGC, EBC, and appliance PEIs/AEIs as a physical layer and data link layer endpoint on a LAN switch in the ASLAN.	5.3.2.12.12.1	Y	Y	
136	The MG shall connect to the ASLAN of the appliance using the IP as a Network Layer Protocol. In this case, the MG shall appear to the MGC, EBC, and appliance PEIs/AEIs as an IP endpoint on an IP router on the ASLAN	5.3.2.12.12.2	Y	Y	
137	The MG shall support IPv4 as a Network Layer Protocol. The MG shall also support IPv6 as a Network Layer Protocol.	5.3.2.12.12.2	Y	Y	
138	Conformant with Section 5.3.5, IPv6 Requirements, the MG shall support dual IPv4 and IPv6 stacks (i.e., support both IPv4 and IPv6 in the same IP end point) as described in RFC 4213.	5.3.2.12.12.2	Y	Y	
139	The MG shall support exchange of VoIP media streams with appliance PEIs/AEIs, other appliance MGs, and the appliance EBC (and through the appliance EBC, with other PEIs/AEIs and MGs on other network appliances) using the following IETF-defined Media Transfer Protocols: • SRTP, conformant with RFC 3711 • SRTCP, conformant with RFC 3711	5.3.2.12.12.4	Y	Y	
140	The MG shall secure all VoIP media streams exchanged with appliance PEIs/AEIs, other appliance MGs, and the appliance EBC (and through the EBC, with PEIs/AEIs and MGs on other network appliances) using SRTP and SRTCP.	5.3.2.12.12.4	Y	Y	
141	The MG shall use UDP as the underlying Transport Layer Protocol, and IP as the underlying Network Layer Protocol, when SRTP is used for media stream exchange.	5.3.2.12.12.4	Y	Y	
142	When the VoIP signaling streams contain supplier-proprietary protocol messages instead of H.248 or ISDN PRI messages, the MG shall secure the proprietary protocol message exchange with the MGC using mechanisms that are as strong as, or stronger than, the use of IPSec to secure H.248 and PRI message exchange.	5.3.2.12.12.5	Y	Y	
143	The MG shall support TDM voice streams using the following: • ITU-T 64 kbps G.711 μ-law PCM over digital trunks • ITU-T 64 kbps G.711 A-law PCM over digital trunks • North American 56 kbps G.711 μ-law PCM over digital trunks • North American analog voice transmission over analog trunks on TDM trunk groups on the TDM side of the MG	5.3.2.12.12.6.5	Y	Y	
144	The MG shall convert between North American 56 kbps G.711 μ-law PCM and ITU-T 64 kbps G.711 μ-law PCM in cases where North American 56 kbps TDM voice trunks are used on the TDM side of the MG.	5.3.2.12.12.6.5	Y	Y	
145	The MG shall convert between North American analog voice transmission and ITU-T 64 kbps G.711 μ-law PCM in cases where North American analog voice trunks are used on the TDM side of the MG.	5.3.2.12.12.6.5	Y	Y	

Table 3-1. Unified Capabilities Products Capability/Functional Requirements Table (continued)

ID	Requirement	UCR Ref (UCR 2008 CH1)	MFSS	LSC	WAN SS
146	The MG shall support uncompressed, packetized VoIP streams using ITU-T Recommendation G.711 μ-law PCM and ITU-T Recommendation G.711 A-law PCM (ITU-T Recommendation G.711, November 1998, plus Appendix I, September 1999, and Appendix II, September 2000) over the IP network on the VoIP side of the MG.	5.3.2.12.12.6.5.1	Y	Y	
147	The MG shall packetize/depacketize G.711 media streams received or sent between its TDM side and its VoIP side.	5.3.2.12.12.6.5.1	Y	Y	
148	The MG shall transport each packetized G.711 VoIP stream to and from the destination local PEI, local AEI, local MG, remote PEI (via an EBC), remote AEI (via an EBC), or remote MG (via an EBC) using SRTP, UDP, and IP protocol layers on the VoIP side of the MG.	5.3.2.12.12.6.5.1	Y	Y	
149	The MG shall support the use of uncompressed, packetized G.711 μ-law and A-law VoIP media streams for both Fixed and Deployable applications.	5.3.2.12.12.6.5.1	Y	Y	
150	The MG shall provide an EC capability with an echo path capacity (echo tail length) of at least 64 ms.	5.3.2.12.13.2.2	Y	Y	
151	The MG shall provide echo cancellation for voice, G3 Fax, and VBD modem fax calls.	5.3.2.12.13.2.2	Y	Y	
152	Each MG EC shall be equipped with an “echo canceller disabling signal” tone detector. This tone detector shall detect and respond to an in-band EC disabling signal from an end user’s G3 Fax or VBD modem device. The EC disabling signal detected shall consist of a 2100-Hz tone with periodic phase reversals inserted in that tone.	5.3.2.12.13.2.2	Y	Y	
153	The MG tone detector/EC disabler shall detect the “echo canceller disabling signal” and disable the MG EC when, and only when, that signal is present for G3 Fax or VBD modem.	5.3.2.12.13.2.2	Y	Y	
154	The MG shall derive its clock timing from a designated T1 or PRI interface.	5.3.2.12.14	Y	Y	
155	The MGC within the CCA shall be responsible for controlling all the MGs within the LSC or MFSS.	5.3.2.12.15	Y	Y	
156	The MGC within the CCA shall be responsible for controlling all the trunks (i.e., DoD CCS7, PRI, or CAS) within each MG within the LSC or MFSS.	5.3.2.12.15	Y	Y	
157	The MGC within the CCA shall be responsible for controlling all media streams on each trunk within each MG.	5.3.2.12.15	Y	Y	
158	The MGC within the CCA shall accept IP signaling streams from an MG, conveying received PRI or CAS trunk signaling. The MGC shall return IP signaling streams to the MG accordingly, for conversion to transmitted PRI or CAS trunk signaling.	5.3.2.12.15	Y	Y	
159	Within the appliance (i.e., LSC or MFSS), the MGC shall use either ITU-T Recommendation H.248 (Gateway Control Protocol Version 3) or a supplier-proprietary protocol to accomplish the MG, trunk, and media stream controls described previously.	5.3.2.12.15	Y	Y	
160	Whenever the MG uses ITU-T Recommendation V.150.1, the following applies: ITU-T Recommendation V.150.1 provides for three states: audio, VBD, and modem relay. After call setup, inband signaling may be used to transition from one state to another. In addition, V.150.1 provides for the transition to FoIP using Fax Relay per ITU-T Recommendation T.38.	5.3.2.12.16	Y	Y	
161	The LSC MG, MFSS MG, and WAN SS MG shall not allow AS-SIP sessions that have reached the ringing state (i.e., an AS-SIP 180 (Ringing) message or 183 (Session Progress) has been sent from the called party to the calling party, and the calling party is receiving an audible ringing tone) to fail when an internal failure occurs within that MG.	5.3.2.12.17	Y	Y	
162	The precedence level and dialed number input to the PEI or AEI shall be as specified in UCR 2008, Section 5.2.3.5.1.2, Interswitch and Intraswitch Dialing.	5.3.2.16	Y	Y	

Table 3-1. Unified Capabilities Products Capability/Functional Requirements Table (continued)

ID	Requirement	UCR Ref (UCR 2008 CH1)	MFSS	LSC	WAN SS
163	The DSN Worldwide Numbering and Dialing Plan will be used as the addressing schema within the current DSN and its migration into the SIP environment.	5.3.2.16.1	Y	Y	
164	The CCA shall allow session requests from LSC, MFSS EIs, other appliances, and MFSS MGs to contain • Called addresses including DSN numbers from the DSN numbering plan • Called addresses including E.164 numbers from the E.164 numbering plan	5.3.2.16.1	Y	Y	
165	When a session request's called address includes a DSN number from the DSN numbering plan, the CCA shall determine whether the called DSN number is local to the LSC or MFSS, or external to the LSC or MFSS.	5.3.2.16.1	Y	Y	
166	When a session request's called address includes an E.164 number from the E.164 numbering plan, the CCA shall determine whether the called E.164 number is local to the LSC or MFSS, or external to the LSC or MFSS.	5.3.2.16.1	Y	Y	
167	The CCA shall allow each VoIP and Video PEI and AEI served by an LSC or MFSS to have both a DSN number assigned and an E.164 number assigned.	5.3.2.16.1.1	Y	Y	
168	For VoIP and Video PEIs or AEIs that have both a DSN number and an E.164 number assigned, the CCA shall be able to match each PEI's or AEI's DSN number with its E.164 number, and to match each PEI's or AEI's E.164 number with its DSN number.	5.3.2.16.1.1	Y	Y	
169	The CCA shall be able to distinguish DSN called numbers from E.164 called numbers when processing VoIP and Video session requests from PEIs, AEIs, EBCs, MG line cards, and MG trunk groups.	5.3.2.16.1.2	Y	Y	
170	The CCA shall be able to distinguish local [DSN or E.164] called numbers from external [DSN or E.164] called numbers when processing VoIP and Video session requests from PEIs, AEIs, EBCs, MG line cards, and MG trunk groups.	5.3.2.16.1.2	Y	Y	
171	The MFSS or LSC is only required to support one network FQDN for use with SIP URI domain names: "uc.mil" if that appliance is used for SBU traffic, and "cuc.mil" if that appliance is used for classified traffic.	5.3.2.16.1.4.1	Y	Y	
172	The MFSS or LSC is required to ensure that all AS-SIP session requests entering or leaving that appliance use the network FQDN of that appliance (i.e., "uc.mil" for SBU traffic, or "cuc.mil" for Classified traffic) as the domain name in called SIP URIs.	5.3.2.16.1.4.1	Y	Y	
173	All voice systems, TDM or IP technology-based, must contain subscriber assignment information.	5.3.2.16.1.5	Y	Y	
174	Use of the Commercial Cost Avoidance functionality shall be an optional application that can be configured (i.e., enabled and disabled) on each RTS LSC.	5.3.2.23		Y	
175	The LSC shall be able to query the DISN RTS Routing Database on "99 dialed PSTN number" call requests from LSC end users. When the database responds to this query with a DSN number that matches the dialed PSTN number, the LSC shall route the call request over the appropriate IP (AS-SIP) or TDM (e.g., T1.619A PRI) path, using the DSN number returned by the database. When the database responds with a "number not found" indication, the LSC shall route the call request to the local TDM PSTN trunk group (PRI or CAS) on the LSC's MG, using the originally dialed commercial number.	5.3.2.23		Y	
176	The query-response interface between the LSC and the RTS Routing Database shall be LDAP Version 3 (v3) over TLS over IP. This LDAPv3 interface shall be compliant with RFC 4510.	5.3.2.23		Y	
177	The encoding of the LDAPv3 messages and data schema used on the DB query interface between the LSC and the RTS Routing Database shall follow the BER of ASN.1, consistent with Section 5.1, Protocol Encoding, of RFC 4511.	5.3.2.23		Y	
178	The DB query interface between the LSC and the RTS Routing Database shall traverse the data firewalls (and not the RTS EBC firewalls) at both the LSC and RTS Routing Database sites.	5.3.2.23		Y	
179	After transmitting a Commercial Cost Avoidance query to the Database, the LSC shall start a "Commercial Cost Avoidance Query Response" timer awaiting a Database response. If the timer expires	5.3.2.23		Y	

Table 3-1. Unified Capabilities Products Capability/Functional Requirements Table (continued)

ID	Requirement	UCR Ref (UCR 2008 CH1)	MFSS	LSC	WAN SS
	and no response is received, the LSC shall route the call request to the local TDM PSTN trunk group (PRI or CAS) using the originally dialed commercial number.				
180	On Commercial Cost Avoidance call requests that are re-routed to DSN numbers by the database, the LSC shall respond to MFSS or WAN SS AS-SIP signaling indicating that the call was rejected (i.e., an AS-SIP 4xx, 5xx, or 6xx response to an AS-SIP INVITE message), by overflowing these calls from the AS-SIP trunk group to the local TDM PSTN trunk group (PRI or CAS) using the originally dialed commercial number.	5.3.2.23		Y	
181	On Commercial Cost Avoidance call requests that are re-routed to DSN numbers by the database, the MFSS or WAN SS shall accept AS-SIP call requests from the LSC where the DSN number is identified as the called number. The MFSS or WAN SS shall also be capable of returning AS-SIP signaling to the calling LSC that indicates “404 Not Found,” “480 Temporarily Unavailable,” or “500 Server Internal Error.” The MFSS or WAN SS shall be capable of generating this AS-SIP signaling on its own, and shall be capable of relaying that AS-SIP signaling when it is received from a remote MFSS, remote WAN SS, or remote LSC.	5.3.2.23	Y		Y
182	For each RTS end user served by an LSC, the LSC shall be able to upload that user’s DSN phone number, PSTN phone number, and a unique LSC CCA-ID, Primary MFSS/WAN SS CCA-ID, and Backup MFSS/WAN SS CCA-ID to the RTS Routing Database.	5.3.2.23		Y	
183	The AS-SIP signaling appliance shall divert ALL unanswered RTS VoIP calls above the ROUTINE precedence level to a designated RTS DN for PCD (e.g., the number of an attendant console or group of attendant consoles).	5.3.2.25	Y	Y	C
184	Unanswered RTS VoIP calls above the ROUTINE precedence level shall not be forwarded to voicemail, and shall not be forwarded to ACD systems. Instead, they should divert to the PCD DN when the PCD time period expires.	5.3.2.25	Y	Y	C
185	Unanswered RTS VoIP calls at the ROUTINE precedence level shall still be forwarded to voicemail or to ACD systems (when Call Forwarding Don’t Answer is assigned to the called RTS DN), even though PCD is enabled and configured for the AS-SIP signaling appliance.	5.3.2.25	Y	Y	C
186	Calls above the ROUTINE precedence level that are destined to (directly dialed to) DNs assigned to voicemail or ACD systems shall only divert to the PCD DN as specified above (i.e., when they are unanswered at the voicemail or ACD system, and the PCD time period expires).	5.3.2.25	Y	Y	C
187	ROUTINE precedence level calls that are destined to (directly dialed to) DNs assigned to voicemail or ACD systems shall be allowed.	5.3.2.25	Y	Y	C
188	Incoming precedence calls to the attendant’s listed DN, and incoming calls that are diverted to this attendant DN, shall be placed in a queue for the attendant console (or group of attendant consoles).	5.3.2.25	Y	Y	C
189	When a group of attendant consoles on the same LSC is used, and calls are either placed or diverted to the attendant console DN, call distribution across the Console Group shall be used to reduce excessive caller waiting times.	5.3.2.25	Y	Y	C
190	Incoming calls (placed and diverted) to the console DN shall be queued for attendant service by call precedence and time of arrival. The highest precedence call with the longest holding time in the queue shall be offered to an attendant first.	5.3.2.25	Y	Y	C
191	A recorded message of explanation (e.g., ATQA) shall be applied automatically to all the waiting calls in the Attendant Console queue (refer to Table 5.3.4-9, Announcements).	5.3.2.25	Y	Y	C
192	The RTS Attendant Console shall interoperate with PBAS/ASAC as described in • Section 5.3.2.7.2.1, PBAS/ASAC Requirements • Section 5.3.2.2.2.3, ASAC – Open Loop • Section 5.3.4.10, Precedence and Preemption The console shall be able to initiate all levels of RTS precedence calls (i.e., ROUTINE through FLASH-OVERRIDE).	5.3.2.26.1	Y	Y	C

Table 3-1. Unified Capabilities Products Capability/Functional Requirements Table (continued)

ID	Requirement	UCR Ref (UCR 2008 CH1)	MFSS	LSC	WAN SS
193	The RTS Attendant Console shall provide a visual display of each precedence level and the calling number, for incoming direct dialed calls to the attendant, and diverted calls to the attendant (e.g., calls that reach the attendant through PCD).	5.3.2.26.2	Y	Y	C
194	The appliance and the attendant console shall give the attendant the ability to verify and override a busy line condition.	5.3.2.26.4	Y	Y	C
195	If the attendant uses BLV on a called line, and that called line (called EI) is busy, the appliance and the attendant console shall give an audible and visual "called line busy" indication back to the attendant.	5.3.2.26.4	Y	Y	C
196	The appliance and the attendant console shall prevent an attendant from activating BLV or Emergency Interrupt to called lines and called numbers that are located in the commercial network (the PSTN).	5.3.2.26.4	Y	Y	C
197	The appliance and the attendant console shall give the attendant the ability to use Emergency Interrupt to interrupt an existing call on a busy line, and inform the busy user of a new incoming call.	5.3.2.26.4	Y	Y	C
198	The appliance shall give selected destination EIs the ability to be exempt from Emergency Interrupt and attendant break-in.	5.3.2.26.4	Y	Y	C
199	The appliance and the attendant console shall have the ability to route all calls that are normally directed to the console to a separate night service deflection number. The night service deflection number shall be a fixed (preconfigured) or manually-selected DN.	5.3.2.26.5	Y	Y	C
200	When an attendant redirects an incoming call to a destination station, and that station is either busy or does not answer the call within a preset time, the appliance and the attendant console shall ensure that calling party on the redirected call is recalled automatically to the console. In this case, the appliance shall ensure that that the "recalled" call is returned to the console that originally processed the call.	5.3.2.26.6	Y	Y	C
201	The appliance and the attendant console shall have the ability to place calls (both directed to the attendant and diverted to the attendant) into a waiting queue.	5.3.2.26.7	Y	Y	C
202	The appliance and the attendant console shall ensure that calls in the attendant queue are not lost when a console is placed out of service or has its calls forwarded to a night service deflection number.	5.3.2.26.7	Y	Y	C
203	The LSCs that support SIP EIs MUST comply with the differentiated set of requirements defined for SIP EIs if they serve SIP EIs, and LSCs MUST comply with the differentiated set of requirements defined for H.323 and/or vendor-proprietary EIs if they serve H.323 and/or vendor-proprietary EIs.	5.3.4.7.1		Y	
204	All AS-SIP signaling appliances MUST comply with the SIP syntax and encoding rules set forth in RFC 3261. [RFC 3261, Section 25, Augmented BNF for the SIP Protocol]	5.3.4.7.1.1	Y	Y	Y
205	When an AS-SIP signaling appliance does not understand a header field in a request (and support for the header field is not a mandatory requirement under this specification), the AS-SIP signaling appliance MUST ignore that header field and continue processing the message. The AS-SIP signaling appliances MUST ignore any malformed header fields that are not necessary for processing requests.	5.3.4.7.1.3	Y	Y	Y
206	When an AS-SIP signaling appliance, that is implemented as a SIP proxy, receives a SIP Request message, 2xx response, or 18x response, then the AS-SIP signaling appliance MUST add a Record-Route header whereby the userinfo part of the SIP URI is a unique identifier for the AS-SIP signaling appliance and an IP address is used for the host name.	5.3.4.7.1.3c	Y	Y	Y
207	All AS-SIP signaling appliances MUST be call stateful.	5.3.4.7.1.4	Y	Y	Y
208	Upon receipt of a new request, AS-SIP signaling appliances MUST perform request validation, route information preprocessing, determine request targets, perform request forwarding, perform response processing, process timer C, handle transport error, handle CANCEL processing, and perform proxy route processing according to RFC 3261	5.3.4.7.1.5	Y	Y	Y
209	All AS-SIP signaling appliances MUST support generation of the long form of the SIP header fields along with the receipt and processing of	5.3.4.7.1.7	Y	Y	Y

Table 3-1. Unified Capabilities Products Capability/Functional Requirements Table (continued)

ID	Requirement	UCR Ref (UCR 2008 CH1)	MFSS	LSC	WAN SS
	the long form of the SIP header fields.				
210	All AS-SIP signaling appliances MUST support receiving and processing the compact form of the SIP header fields.	5.3.4.7.1.8	Y	Y	Y
211	All AS-SIP signaling appliances serving IP EIs MUST support the offer/answer model for the Session Description Protocol (SDP).	5.3.4.7.1.9	Y	Y	Y
212	If an LSC receives a call request from a served IP EI and the LSC has been unable to establish a TLS connection with its EBC and is unable to do so upon receipt of the INVITE, then the AS-SIP signaling appliance MUST ensure that the IP EI plays the Isolated Code Announcement (ICA) and terminates the call request and MUST send an alarm to the NMS.	5.3.4.7.1.10		Y	
213	When an SS receives an INVITE from either a served LSC or another SS where the Request-URI has a DSN telephone number for which the SS has no entry in its Location Server, then the SS MUST respond with a 404 (Not Found) response code.	5.3.4.7.1.12	Y		Y
214	When an LSC receives an inbound INVITE from its primary (or secondary) SS whose Request-URI has a DSN telephone number for which the LSC has no entry in its Location Server, then the LSC MUST respond with a 404 (Not Found) response message.	5.3.4.7.1.13		Y	
215	The LSCs serving IP EIs MUST ensure that all outbound INVITEs forwarded onto the UC WAN include a Supported header with the option tag “100rel.”	5.3.4.7.1.14		Y	
216	When an AS-SIP signaling appliance receives an INVITE (having an sdp offer) and will be interworking the signaling to the TDM network, then the AS-SIP signaling appliance MUST return an sdp answer in the first non-failure reliable provisional response.	5.3.4.7.1.15	Y	Y	Y
217	When an LSC receives an INVITE (having an sdp offer) intended for a served IP EI, then the AS-SIP signaling appliance MUST NOT return an sdp answer in any provisional response and MUST only place the sdp answer in the 200 response.	5.3.4.7.1.16		Y	
218	When an AS-SIP signaling appliance receives an Empty INVITE (i.e., an INVITE that does not include an sdp offer) and said AS-SIP signaling appliance will be interworking the signaling to the TDM network, then the AS-SIP signaling appliance MUST send an sdp offer in the first reliable non-failure provisional response (1xx response code greater than a 100 response code).	5.3.4.7.1.17	Y	Y	Y
219	When an AS-SIP signaling appliance receives an Empty INVITE intended for a served IP EI, then the AS-SIP signaling appliance MUST NOT send an sdp offer in any provisional response (1xx response code greater than a 100 response code) and MUST only send the sdp offer in the 200 response.	5.3.4.7.1.18	Y	Y	Y
220	When an AS-SIP signaling appliance that is interworking SIP signaling with the TDM network receives a 180 (Ringing) response from the IP network, the AS-SIP signaling appliance MUST ensure that the appropriate ring back tone (e.g., ring back, precedence ring back) is generated on the TDM network.	5.3.4.7.1.19	Y	Y	Y
221	Announcements are not sent in-band on the DSN TDM network; therefore, when an AS-SIP signaling appliance that is interworking SIP signaling with the TDM network receives a 480 (Temporarily Unavailable), 486 (Busy Here), or 488 (Not Acceptable Here) response from the IP network with either no Reason header or a Reason header that does NOT have a preemption cause, the AS-SIP signaling appliance does NOT generate an announcement to be sent to the TDM network, rather it sends either a REL with Q.850 cause code 46 precedence call blocked (in the case of SS7 ISUP) or a Disconnect (in the case of ISDN) with the appropriate cause code message to the TDM network.	5.3.4.7.1.20	Y	Y	Y
222	An LSC that receives an outbound call request from a served IP EI MAY include an audio media feature tag and a video media feature tag, as appropriate, in the Contact header field of the INVITE message.	5.3.4.7.1.21		Y	
223	The AS-SIP signaling appliances are NOT required to process and act on the audio media tag and the video media tag in the Contact header	5.3.4.7.1.22	Y	Y	Y

Table 3-1. Unified Capabilities Products Capability/Functional Requirements Table (continued)

ID	Requirement	UCR Ref (UCR 2008 CH1)	MFSS	LSC	WAN SS
	but all intermediary AS-SIP signaling appliances MUST preserve the audio media tag (if present) and the video tag (if present) when forwarding the INVITE. (i.e., intermediary AS-SIP signaling appliances MUST NOT strip off or modify the media feature tags).				
224	When an LSC receives a call request from a served IP EI intended for a destination outside the enclave, then the AS-SIP signaling appliance MUST generate the P-Asserted-Identity header.	5.3.4.7.1.23		Y	
225	The LSC serving the AS-SIP EI MUST support authentication of the AS-SIP EIs. The user of the AS-SIP EI is required to perform user authentication to the LSC when initiating precedence call requests.	5.3.4.7.1.26		Y	
226	The LSCs serving IP EIs (other than AS-SIP EIs) MUST support authentication of the IP EIs. The user of the IP EI is required to perform user authentication to the LSC when initiating precedence call requests.	5.3.4.7.1.31		Y	
227	When an LSC serving H.323 and/or proprietary EIs receives a request that contains a Require header field with one or more option tags that it does not understand, then it MUST return a 420 (Bad Extension) response code. The response MUST include an Unsupported header field listing those option tags the element did not understand.	5.3.4.7.1.35		Y	
228	The LSCs and AS-SIP EIs MUST support the generating, receiving, and processing of SIP CANCEL requests.	5.3.4.7.2.2		Y	
229	The AS-SIP signaling appliances MUST support the keep-alive mechanism for SIP sessions.	5.3.4.8.1.1	Y	Y	Y
230	The AS-SIP signaling appliances MUST support the generating, receiving, and processing of the Session-Expires and Min-SE header fields.	5.3.4.8.1.3	Y	Y	Y
231	The AS-SIP signaling appliances MUST support the 422 (Session Interval Too Small) response code.	5.3.4.8.1.4	Y	Y	Y
232	The AS-SIP signaling appliances MUST support the option tag “timer” for use with the Supported and Require header fields; however, an AS-SIP signaling appliance acting as a UAC or a SIP EI acting as a UAC MUST NOT place the option tag “timer” in either a Require header or a Proxy-Require header.	5.3.4.8.1.4	Y	Y	Y
233	When an AS-SIP signaling appliance receives an outbound request from a served H.323 or proprietary IP EI, then the AS-SIP signaling appliance MUST operate in accordance with the UAC behavior (when responsible for performing the refresh).	5.3.4.8.1.8	Y	Y	Y
234	When an AS-SIP signaling appliance receives a call request from another AS-SIP signaling appliance, and the destination is a served H.323 or proprietary IP EI, then the AS-SIP signaling appliance MUST operate in accordance with the UAS behavior (when responsible for performing the refresh).	5.3.4.8.1.10	Y	Y	Y
235	When SDP information is present in a SIP message, the SIP message MUST have a content-type header having the MIME Content-Type “application/sdp”.	5.3.4.9.1.2	Y	Y	Y
236	The SDP parser in the AS-SIP signaling appliance (and all AS-SIP EIs, including AS-SIP video conferencing EIs) MUST be able to accept and handle without error any of the SDP line types enumerated in RFC 2327 even if the application ignores the contents.	5.3.4.9.1.3	Y	Y	Y
237	The precedence level of the call request MUST be set forth in a SIP Resource-Priority header field whose syntax is in accordance with RFC 4412, as modified in UCR 2008, Section 5.3.4.10.2	5.3.4.10.2.1	Y	Y	C
238	Video telephony EIs MUST, as the default configuration, require an end user wishing to place a call that includes video, to affirmatively signal the intention to include video to the EI every time the caller wishes to engage in a video telephony call.	5.3.4.12.1.1	Y	Y	C
239	Every time a caller requests a video telephony call and the video portion of the telephony call is successfully established, then the video telephony EI MUST provide the user with an affirmative confirmation that the video is enabled either before, or upon successful completion of, session establishment.	5.3.4.12.1.2	Y	Y	C

Table 3-1. Unified Capabilities Products Capability/Functional Requirements Table (continued)

ID	Requirement	UCR Ref (UCR 2008 CH1)	MFSS	LSC	WAN SS
240	When an INVITE with an sdp offer that includes both audio and video capabilities is received by an LSC serving a destination EI that supports video telephony, then when the call request is received by the destination EI the destination EI MUST indicate to the callee that a telephony call requesting video connectivity has been received.	5.3.4.12.2.1	Y	Y	C
241	Every time a callee accepts a video telephony call and the video portion of the telephony call is successfully established, then the video telephony EI MUST provide the user with an affirmative confirmation that the video is enabled either before or upon successful session establishment.	5.3.4.12.2.3	Y	Y	C
242	AS-SIP Signaling appliances must follow call flows depicted in section 5.3.4.13 for all call features and calling services.	5.3.4.13	Y	Y	Y
243	AS-SIP Signaling appliances must follow requirements depicted in section 5.3.4.14 for all IP to TDM and TDM to IP translations.	5.3.4.14	Y	Y	Y
244	When an interworking AS-SIP signaling appliance receives a request that contains a Require header field with one or more option-tags that it does not understand, then the interworking AS-SIP signaling appliance MUST return a 420 (Bad Extension) response. The response MUST include an Unsupported header field listing those option-tags the element did not understand.	5.3.4.16.1.1	Y	Y	Y
245	All outbound INVITEs generated by an interworking AS-SIP signaling appliance MUST include a Supported header with the option tag “100rel.”	5.3.4.16.1.2	Y	Y	Y
246	Interworking AS-SIP signaling appliances MUST support generating and receiving SIP INVITE requests. Interworking AS-SIP signaling appliances MUST support generating and receiving SIP re-INVITES.	5.3.4.16.2.1	Y	Y	Y
247	Interworking AS-SIP signaling appliances MUST support generating and receiving SIP CANCEL requests.	5.3.4.16.2.2	Y	Y	Y
248	Interworking AS-SIP signaling appliances MUST support generating and receiving SIP OPTIONS requests.	5.3.4.16.2.4	Y	Y	Y
249	Interworking AS-SIP signaling appliances MUST support generating and receiving SIP BYE requests	5.3.4.16.2.5	Y	Y	Y
250	Interworking AS-SIP signaling appliances MUST support generating and receiving SIP ACK requests	5.3.4.16.2.6	Y	Y	Y
251	Interworking AS-SIP signaling appliances MUST support generating and receiving the SIP PRACK method. Interworking AS-SIP signaling appliances MUST support use of the option tag “100rel” with the Require header and Supported header, and MUST support the use of header fields RAck and RSeq.	5.3.4.16.2.8	Y	Y	Y
252	Interworking AS-SIP signaling appliances MUST support generating and receiving the SIP UPDATE method	5.3.4.16.2.9	Y	Y	Y
253	Inter-working AS-SIP signaling appliances MUST be capable of receiving/processing REFER requests, the Refer-To header, and the REFER event package.	5.3.4.16.2.10	Y	Y	Y
254	Interworking AS-SIP signaling appliances MUST support the NOTIFY method for event notification.	5.3.4.16.2.12	Y	Y	Y
255	Interworking AS-SIP signaling appliances MUST, in adherence with the enumerated RFCs, be capable of generating, receiving, and processing the SIP headers listed in UCR 2008 Section 5.3.4.16.3.1	5.3.4.16.3.1	Y	Y	Y
256	The From header MUST include a tag field as specified in RFC 3261, Section 19.3.	5.3.4.16.3.3	Y	Y	Y
257	The To header of a request that is part of a dialog MUST include a tag field as specified in RFC 3261, Section 19.3.	5.3.4.16.3.4	Y	Y	Y
258	Interworking AS-SIP signaling appliances MUST support the use of option tags for the Require, Supported, and Unsupported headers.	5.3.4.16.3.5	Y	Y	Y
259	When the interworking LSC sends an initial AS-SIP INVITE to its local EBC intended for its SS, the interworking LSC MUST add two Route header field values, which either takes the form of a route set	5.3.4.16.3.6		Y	

Table 3-1. Unified Capabilities Products Capability/Functional Requirements Table (continued)

ID	Requirement	UCR Ref (UCR 2008 CH1)	MFSS	LSC	WAN SS
	comprising two Route headers where the first Route header is the sip uri for the EBC at the enclave and the second Route header is the sip uri for the EBC serving the SS, or takes the form of one Route header with two comma-separated field values.				
260	When an interworking SS forwards an initial AS-SIP INVITE to a peer SS, then the interworking SS MUST add a route set comprising two Route headers where the first Route header is the SIP URI for the EBC that serves the interworking SS, and the second Route header is the SIP URI for the EBC serving the peer SS.	5.3.4.16.3.7	Y		Y
261	When an interworking AS-SIP signaling appliance generates an outbound AS-SIP request, the interworking AS-SIP signaling appliance MUST add its own VIA header to the AS-SIP request.	5.3.4.16.3.8	Y	Y	Y
262	When an interworking AS-SIP signaling appliance receives a SIP response to be translated into TDM signaling, then the interworking AS-SIP signaling appliance operates as the UAC for SIP purposes.	5.3.4.16.3.9	Y	Y	Y
263	When an interworking AS-SIP signaling appliance receives an inbound SIP request to be translated into TDM signaling, then the AS-SIP signaling appliance operates as the UAS for SIP purposes.	5.3.4.16.3.10	Y	Y	Y
264	When an interworking AS-SIP signaling appliance generates a SIP response on behalf of a signaling message received from the TDM network, then before forwarding the SIP response the interworking AS-SIP signaling appliance MUST include the VIA headers received in the corresponding SIP request.	5.3.4.16.3.11	Y	Y	Y
265	When an interworking AS-SIP signaling appliance operating as an originating gateway receives an IAM from the TDM network and sends an INVITE to another AS-SIP signaling appliance (SS or LSC), then the interworking AS-SIP signaling appliance MUST add a CCA-ID parameter to the SIP URI of the Contact header populated with its unique identifier before forwarding the INVITE onward to the next AS-SIP signaling appliance.	5.3.4.16.3.12	Y	Y	Y
266	Interworking AS-SIP signaling appliances MUST support generating, receiving, and processing the provisional (1xx) response codes: 100 (Trying), 180 (Ringing), and 183 (Session Progress).	5.3.4.16.4.1	Y	Y	Y
267	Interworking AS-SIP signaling appliances MUST support generating and receiving/processing the successful (2xx) response codes: 200 (OK) [RFC 3261, Section 21.2, 200 OK] and 202 (Accepted)	5.3.4.16.4.2	Y	Y	Y
268	Interworking AS-SIP signaling appliances MUST support generating and receiving/processing the request failure (4xx) response codes: 400 (Bad Request), 401 (Unauthorized), 403 (Forbidden), 404 (Not Found), 405 (Method Not Allowed), 406 (Not Acceptable), 407 (Proxy Authentication Required), 408 (Request Timeout), 410 (Gone), 413 (Request Entity Too Large), 414 (Request-URI Too Long), 415 (Unsupported Media Type), 416 (Unsupported URI Scheme), 417 (Unknown Resource-Priority), 420 (Bad Extension), 421 (Extension Required), 422 (Session Interval Too Small), 423 (Interval Too Brief), 480 (Temporarily Unavailable), 481 (Call/Transaction Does Not Exist), 482 (Loop Detected), 483 (Too Many Hops), 484 (Address Incomplete), 485 (Ambiguous), 486 (Busy Here), 487 (Request Terminated), 488 (Not Acceptable Here), and 491 (Request Pending).	5.3.4.16.4.4	Y	Y	Y
269	Interworking AS-SIP signaling appliances upon properly receiving a CANCEL request for an INVITE MUST first send a 200 (OK) response code to the CANCEL, and then follow up with a 487 (Request Terminated) response code to the INVITE.	5.3.4.16.4.5	Y	Y	Y
270	Interworking AS-SIP signaling appliances MUST support generating and receiving/processing the server failure (5xx) response codes: 500 (Server Internal Error), 501 (Not Implemented), 502 (Bad Gateway), 503 (Service Unavailable), 504 (Server Timeout), 505 (Version Not Supported), 513 (Message Too Large) [RFC 3261, Section 21.5, Server Failure 5xx], and 580 (Precondition Failure)	5.3.4.16.4.6	Y	Y	Y
271	Interworking AS-SIP signaling appliances MUST support generating and receiving/processing the global failures (6xx) response codes: 600 (Busy Everywhere), 603 (Decline), 604 (Does Not Exist Anywhere), and 606 (Not Acceptable).	5.3.4.16.4.7	Y	Y	Y
272	When an interworking AS-SIP signaling appliance receives an outbound request from the PSTN (i.e., the interworking AS-SIP signaling appliance is operating as an originating gateway) and the	5.3.4.17.1.1	Y	Y	Y

Table 3-1. Unified Capabilities Products Capability/Functional Requirements Table (continued)

ID	Requirement	UCR Ref (UCR 2008 CH1)	MFSS	LSC	WAN SS
	destination is NOT an IP EI directly served by the interworking AS-SIP signaling appliance, then the interworking AS-SIP signaling appliance MUST operate in accordance with the UAC behavior set forth in RFC 4028.				
273	When an interworking AS-SIP signaling appliance acting as a terminating gateway receives a call request from another AS-SIP signaling appliance, then the interworking AS-SIP signaling appliance MUST operate in accordance with the UAS behavior set forth in RFC 4028.	5.3.4.17.1.3	Y	Y	Y
274	Interworking AS-SIP signaling appliances MUST support the option tag “resource-priority” for use with the Require header.	5.3.4.18.3.1	Y	Y	Y
275	The interworking AS-SIP signaling appliance MUST receive and accept a Require header field with the option tag “resource-priority” in the INVITE, UPDATE, and REFER messages. Interworking AS-SIP signaling appliances MUST NOT reject the message with a 420 (Bad Extension) response code, but rather it MUST accept the request and translate it into the appropriate TDM signaling message as required.	5.3.4.18.3.2	Y	Y	Y
276	If an interworking AS-SIP signaling appliance receives an inbound ROUTINE call request over the IP network for a destination on the TDM network and the interworking AS-SIP signaling appliance has insufficient bandwidth-related resources (e.g., lack of circuit-switched trunk capacity for bearer traffic) to handle the call request, the interworking AS-SIP signaling appliance MUST reply with a 488 (Not Acceptable Here) response code and SHOULD include a Warning header with warning code 370 (Insufficient Bandwidth).	5.3.4.18.4.5	Y	Y	Y
277	If an interworking AS-SIP signaling appliance receives an inbound precedence call request (i.e., with precedence level PRIORITY or above) over the IP network for a destination on the TDM network and the interworking AS-SIP signaling appliance has insufficient bandwidth-related resources (e.g., lack of circuit-switched trunk capacity for bearer traffic) to handle the call request, and if there are insufficient existing calls (and/or call requests) of lower precedence whose removal would provide the necessary resources to support the pending call request, then: - The interworking AS-SIP signaling appliance MUST reply with a 488 (Not Acceptable Here) response code and SHOULD include a Warning header with warning code 370 (Insufficient Bandwidth), and - The AS-SIP signaling appliance serving the calling IP EI MUST arrange for a BPA to be played to the calling IP EI before terminating the call.	5.3.4.18.4.6	Y	Y	Y
278	When an interworking AS-SIP signaling appliance receives a precedence call request from the IP network that it translates and forwards onto the TDM network and the response from the TDM network is a REL with Q.850 cause code 46 precedence call blocked (in the case of SS7 ISUP) or a Disconnect with Q.850 cause code 46 precedence call blocked (in the case of ISDN), then the interworking AS-SIP signaling appliance MUST generate a 488 (Not Acceptable Here) response that SHOULD include a “Warning” header with warning code 370 (Insufficient Bandwidth) with no Reason header that it sends onto the IP network.	5.3.4.18.6.2	Y	Y	Y
279	Interworking AS-SIP signaling appliances directly serving IP EIs MUST comply with the requirements in UCR 2008, Section 5.3.4.10.3.3.2, Implementing the Network Preemption. In addition, interworking AS-SIP signaling appliances directly serving IP EIs MUST meet the enumerated requirements in section 5.3.4.18.6.3.2.	5.3.4.18.6.3	Y	Y	Y
280	AS-SIP signaling appliances must follow all call flows depicted in UCR 2008 Section 5.3.4.19 for all supplementary services.	5.3.4.19	Y	Y	Y
281	The product shall support dual IPv4 and IPv6 stacks as described in RFC 4213.	5.3.5.4	Y	Y	Y
282	Dual stack end points or Call Control Agents shall be configured to choose IPv4 over IPv6.	5.3.5.4	Y	Y	Y

Table 3-1. Unified Capabilities Products Capability/Functional Requirements Table (continued)

ID	Requirement	UCR Ref (UCR 2008 CH1)	MFSS	LSC	WAN SS
283	All nodes that are "IPv6-capable" shall be carefully configured and verified that the IPv6 stack is disabled until it is deliberately enabled as part of a risk management strategy.	5.3.5.4	Y	Y	Y
284	The product shall support the IPv6 format as described in RFC 2460 and updated by RFC 5095.	5.3.5.4	Y	Y	Y
285	The product shall support the transmission of IPv6 packets over Ethernet networks using the frame format defined in RFC 2464.	5.3.5.4	Y	Y	Y
286	The product shall support a minimum MTU of 1280 bytes.	5.3.5.4.1	Y	Y	Y
287	The product shall not use the Flow Label field as described in RFC 2460. The product shall be capable of setting the Flow Label field to zero when originating a packet. The product shall not modify the Flow Label field when forwarding packets. The product shall be capable of ignoring the Flow Label field when receiving packets.	5.3.5.4.2	Y	Y	Y
288	The product shall support the IPv6 Addressing Architecture as described in RFC 4291.	5.3.5.4.3	Y	Y	Y
289	The product shall support the IPv6 Scoped Address Architecture as described in RFC 4007.	5.3.5.4.3	Y	Y	Y
290	The product shall support Neighbor Discovery for IPv6 as described in RFC 2461 and RFC 4861.	5.3.5.4.5	Y	Y	Y
291	The product shall not set the override flag bit in the Neighbor Advertisement message for solicited advertisements for anycast addresses or solicited proxy advertisements.	5.3.5.4.5	Y	Y	Y
292	When a valid "Neighbor Advertisement" message is received by the product and the product neighbor cache does not contain the target's entry, the advertisement shall be silently discarded.	5.3.5.4.5	Y	Y	Y
293	When a valid "Neighbor Advertisement" message is received by the product and the product neighbor cache entry is in the INCOMPLETE state when the advertisement is received and the link layer has addresses and no target link-layer option is included, the product shall silently discard the received advertisement.	5.3.5.4.5	Y	Y	Y
294	When address resolution fails on a neighboring address, the entry shall be deleted from the product's neighbor cache.	5.3.5.4.5	Y	Y	Y
295	The product shall support the ability to configure the product to ignore Redirect messages. The product shall only accept Redirect messages from the same router as is currently being used for that destination.	5.3.5.4.5.1	Y	Y	Y
296	If the product supports routing functions, the product shall inspect valid router advertisements sent by other routers and verify that the routers are advertising consistent information on a link and shall log any inconsistent router advertisements. The product shall prefer routers that are reachable over routers whose reachability is suspect or unknown.	5.3.5.4.5.2	Y	Y	Y
297	The product shall support manual assignment of IPv6 addresses.	5.3.5.4.6	Y	Y	Y
298	The product shall support the ICMPv6 as described in RFC 4443. The product shall have a configurable rate limiting parameter for rate limiting the forwarding of ICMP messages.	5.3.5.4.7	Y	Y	Y
299	The product shall support the capability to enable or disable the ability of the product to generate a Destination Unreachable message in response to a packet that cannot be delivered to its destination for reasons other than congestion.	5.3.5.4.7	Y	Y	Y
300	The product shall support the enabling or disabling of the ability to send an Echo Reply message in response to an Echo Request message sent to an IPv6 multicast or anycast address.	5.3.5.4.7	Y	Y	Y
301	The product shall validate ICMPv6 messages, using the information contained in the payload, before acting on them.	5.3.5.4.7	Y	Y	Y
302	The product shall support MLD as described in RFC 2710.	5.3.5.4.8	Y	Y	Y

Table 3-1. Unified Capabilities Products Capability/Functional Requirements Table (continued)

ID	Requirement	UCR Ref (UCR 2008 CH1)	MFSS	LSC	WAN SS
303	For traffic engineering purposes, the bandwidth required per voice subscriber is calculated to be 110.0 kbps (each direction) for each IPv6 call.	5.3.5.4.11	Y	Y	Y
304	The product shall forward packets using the same IP Version as the Version in the received packet.	5.3.5.4.12	Y	Y	Y
305	The product shall use the Alternative Network Address Types (ANAT) semantics for the Session Description Protocol (SDP) in accordance with RFC 4091 when establishing media streams from dual-stacked appliances for AS-SIP signaled sessions.	5.3.5.4.12	Y	Y	Y
306	The product shall prefer any IPv4 address to any IPv6 address when using ANAT semantics.	5.3.5.4.12	Y	Y	Y
307	The product shall place the option tag “SDP-ANAT” in a Required header field when using ANAT semantics in accordance with RFC 4092.	5.3.5.4.12	Y	Y	Y
308	The products shall support Differentiated Services as described in RFC 2474 for a voice and video stream in accordance with Section 5.3.2, Assured Services Requirements, and Section 5.3.3, Network Infrastructure E2E Performance Requirements, plain text DSCP plan.	5.3.5.4.14	Y	Y	Y
309	The LSC must meet all requirements for FCAPS Management and audit logs as listed in UCR 2008 section 5.3.2.7.2.6	5.3.2.7.2.6		Y	
310	The physical interface between the DISA VVoIP EMS and the network components (i.e., LSC, MFSS, EBC, CE Router) is a 10/100-Mbps Ethernet interface. The interface will work in either of the two following modes using auto-negotiation: IEEE, Ethernet Standard 802.3, 1993; or IEEE, Fast Ethernet Standard 802.3u, 1995.	5.3.2.4.4	Y	Y	Y
311	Redundant physical Ethernet interfaces are required for signaling and bearer traffic. If the primary signaling and bearer Ethernet interface fails, then traffic shall be switched to the backup signaling and bearer Ethernet interface.	5.3.2.4.4	Y	Y	Y
312	The MFSS shall provide a single, common interface to the DISA NMS. The single interface shall provide access to MFSS features and functions for both the TDM and SS side of the MFSS.	5.3.2.8.3.1	Y		
313	The MFSS-to-NMS interface shall be an Ethernet connection as specified in Section 5.3.2.4.4, VVoIP NMS Interface Requirements.	5.3.2.8.3.1	Y		
314	As specified in Section 5.3.2.4.4, VoIP NMS Interface Requirements, the MFSS, WAN SS, and LSC components shall support at least one pair of physical Ethernet management interfaces at the component level (not at the device level). One of these Ethernet management interfaces shall be used for component-level communication with a Local EMS. The other Ethernet management interface shall be used for component-level communication with the remote VVoIP EMS.	5.3.2.17.2	Y	Y	Y
315	A network appliance shall have Operations interfaces that provide a standard means by which management systems can directly or indirectly communicate with and, thus, manage the various network appliances in the DISN.	5.3.2.17.2	Y	Y	Y
316	There shall be a local craftsperson interface (Craft Input Device (CID)) for OA&M for all VVoIP network components.	5.3.2.17.2	Y	Y	Y
317	The network appliances shall provide NM data to the external VVoIP EMS.	5.3.2.17.2	Y	Y	Y
318	A network appliance shall communicate with an external Voice and Video management system by a well-defined, standards-based management interface using an industry-accepted management protocol.	5.3.2.17.2	Y	Y	Y
319	Communications between VVoIP EMS and the VVoIP network appliances shall be via IP.	5.3.2.17.2	Y	Y	Y
320	A network appliance shall issue state change notifications for changes in the states of replaceable components, including changes in operational state or service status, and detection of new components.	5.3.2.17.2	Y	Y	Y
321	A network appliance shall be provisioned by the VVoIP EMS with the address, software, and OSI Layer 4 port information associated with its	5.3.2.17.2	Y	Y	Y

Table 3-1. Unified Capabilities Products Capability/Functional Requirements Table (continued)

ID	Requirement	UCR Ref (UCR 2008 CH1)	MFSS	LSC	WAN SS
	Core Network interfaces.				
322	A network appliance shall be capable of maintaining and responding to VVoIP EMS requests for resource inventory, configuration, and status information concerning Core Network interface resources (e.g., IP or MAC addresses) that have been installed and placed into service.	5.3.2.17.2	Y	Y	Y
323	Network appliances that provide voice and video call service shall have the capability to invoke traffic flow (NM) controls as detailed in Section 5.3.2.18, Network Management Requirements of Appliance Functions.	5.3.2.17.2	Y	Y	Y
324	A network appliance shall be capable of setting the Administrative state and maintaining the Operational state of each Core Network interface, and maintaining the time of the last state change.	5.3.2.17.2	Y	Y	Y
325	Alarm messages must be distinguishable from administrative log messages.	5.3.2.17.3.1.1	Y	Y	Y
326	The NEs shall detect their own fault (alarm) conditions.	5.3.2.17.3.1.2	Y	Y	Y
327	The NEs shall generate alarm notifications.	5.3.2.17.3.1.3	Y	Y	Y
328	The network elements shall send the alarm messages in NRT. More than 99.95 percent of alarms shall be detected and reported in NRT. Near Real Time is defined as event detection and alarm reporting within 5 seconds of the event, excluding transport time.	5.3.2.17.3.1.4	Y	Y	Y
329	The network components shall send alarm messages in SNMPv3 format.	5.3.2.17.3.1.5	Y	Y	Y
330	Capability to access and modify configuration data by the VVoIP EMS shall be controllable by using an access privileges function within the network appliance.	5.3.2.17.3.2.1	Y	Y	Y
331	The VVoIP NEs shall be able to receive and respond to remote NM commands.	5.3.2.17.3.4.2	Y	Y	Y
332	When ASAC budgets are reduced, by NM action, below the current budget allocation, any previous sessions (regardless of precedence level) in excess of the new budget shall be allowed to terminate naturally. This assumes that the CE Router queue bandwidths would not be reduced until the LSC session count fell below or equal to the newly commanded reduced budget, to prevent the corruption of existing sessions.	5.3.2.17.3.4.2.2	Y	Y	Y
333	The LSC, MFSS, and WAN SS shall have the capability of setting the percentage of calls to be blocked to the designated destination(s).	5.3.2.17.3.4.2.7	Y	Y	Y
334	FLASH and FLASH-OVERRIDE calls shall not be affected by NM controls.	5.3.2.17.3.4.2.7	Y	Y	Y
335	Within IP, directionalization is controlled by designating all or part of the call budget as inbound (i.e., local destination) and/or outbound (i.e., local origination). The default is no designation (i.e., calls up to the total budget can be inbound or outbound in any combination). It does not change the total budget, only the sourcing direction of the budget; therefore, there is no impact to the router queue bandwidths.	5.3.2.17.3.4.2.10	Y	Y	Y
336	Within IP, the routing of all traffic (i.e., VVoIP and non-VVoIP) is handled via MPLS in the DISN core. The MPLS automatically finds the most effective route for the traffic.	5.3.2.17.3.4.2.11	Y	Y	Y
337	The WAN-level ASAC must be able to account for each subtended LSC under its control. Therefore, the MFSS and WAN SS ASAC must be able to set call budgets for multiple LSC locations via the VVoIP EMS and local EMS access points.	5.3.2.17.3.4.2.13	Y		Y
338	The LSC-level ASAC is required to only account for itself. Therefore, the LSC ASAC must be able to set call budgets for only the PEI/AEIs under its control via the VVoIP EMS and local EMS access points.	5.3.2.17.3.4.2.13		Y	
339	The product shall have the capability of setting a PEI/AEI's maximum allowed precedence level for originating a call. This is a "subscriber class mark feature," which is controlled by the LSC system administrator.	5.3.2.17.3.4.2.14		Y	

Table 3-1. Unified Capabilities Products Capability/Functional Requirements Table (continued)

ID	Requirement	UCR Ref (UCR 2008 CH1)	MFSS	LSC	WAN SS
340	The product shall have the capability of controlling the destination(s) that a PEI or AEI is restricted from calling. This is a subscriber class mark feature that is controlled by the LSC system administrator.	5.3.2.17.3.4.2.14		Y	
341	The ASAC must provide the separate counts for voice and video, in 5-minute intervals. The MFSS and WAN SS ASAC must provide these counts for each of the subtended LSCs under its control, while the LSC is only to provide these counts for the PEIs/AEIs that it controls.	5.3.2.18.2	Y	Y	Y
342	A switching network appliance shall acquire, activate, and manage a CCA software download as directed by the Local EMS. The CCA software may be managed on a per CCA hardware component basis.	5.3.2.18.3.1.1	Y	Y	Y
343	The CCA shall be able to manage the following parameters in the CCA from the VVoIP EMS: • CCA Identification parameter • Recording Office Identification parameter	5.3.2.18.3.1.1	Y	Y	Y
344	The CCA shall manage the activation and deactivation of service features. The CCA shall maintain data for the media server and UFS functions it interacts with. The CCA shall be able to create a backup and manage restoration of configuration data by placing its stable data and changes to the latest configuration in a nonvolatile storage device.	5.3.2.18.3.2	Y	Y	Y
345	A CCA shall meet all applicable Operations Technology Generic Requirements (OTGR) for switching system NE trouble isolation in Telcordia Technologies GR-474-CORE. A CCA shall perform root-cause analysis for any faults within its purview, report the root cause, and suppress the reporting of non-root-cause conditions. A CCA shall support the ability to perform internal diagnostics on its call processing functionality and internal resources, initiated either locally or upon request by the VVoIP EMS.	5.3.2.18.3.3	Y	Y	Y
346	The CCA shall provide trunk group-related traffic measurements as specified in Telcordia Technologies GR-477-CORE, Section 4.1.3. For all calls originating at a CCA, the CCA shall monitor call set-up delay statistics, including delay incurred as part of the set-up of the core network bearer connection.	5.3.2.18.3.5	Y	Y	Y
347	An MG shall manage logical and physical resource inventory information. An MG shall issue an autonomous notification to the VVoIP EMS whenever a new inventory or capabilities are added, or configuration is changed through local management activity. An MG maintains the information related to service features and data, including the management of service logic.	5.3.2.18.5.1	Y	Y	Y
348	An MG shall manage current MG state and status information about its installed major components, line and plug-in cards, and processes.	5.3.2.18.5.1.2	Y	Y	Y
349	Upon the detection or clearing of alarm conditions, the MG shall generate and forward, based on filtering criteria, a notification to the VVoIP EMS. An MG shall support queries for alarm status, state, and current problem information. An MG shall monitor, detect, and generate alarm conditions and states associated with hardware, functional components, system interfaces, and logical resources (e.g., trunk terminations, tone and announcement generators, media content detectors, signal processors, echo control devices).	5.3.2.18.5.2.1	Y	Y	Y
350	An MG shall perform root-cause analysis for any faults within its purview, report the root cause, and suppress the reporting of non-root-cause conditions.	5.3.2.18.5.2.2	Y	Y	Y
351	An MG shall, on request or per a pre-established schedule, run diagnostics on internal resources, hardware, or software, and report the result to the VVoIP EMS.	5.3.2.18.5.2.3	Y	Y	Y
352	An MG shall provide both local and remote loopback capabilities for the digital interfaces that terminate at the MG ports.	5.3.2.18.5.2.3	Y	Y	Y
353	Upon receiving a request from the VVoIP EMS or by an established schedule, an MG shall provide a report of a parameter's present or history counters.	5.3.2.18.5.3.1	Y	Y	Y
354	An MG shall generate TCAs to notify the VVoIP EMS when a thresholded count exceeds its threshold during a measurement interval.	5.3.2.18.5.3.2	Y	Y	Y

Table 3-1. Unified Capabilities Products Capability/Functional Requirements Table (continued)

ID	Requirement	UCR Ref (UCR 2008 CH1)	MFSS	LSC	WAN SS
355	The MG shall manage interexchange trunk (between MG and SSP), trunk group, trunk, and physical resource inventory and configuration data. The MG shall manage MG termination-related status information.	5.3.2.18.5.4	Y	Y	Y
356	An MG shall, on request or on schedule, run diagnostics on internal resources and hardware, run checks on software, and report the results to the VVoIP EMS. The MG shall provide test access to external test equipment for passively monitoring the traffic through the MG interfaces. This passive monitoring shall not degrade the performance of traffic.	5.3.2.18.5.5	Y	Y	Y
357	The MG shall receive voice-grade analog line configuration data from the VVoIP EMS upon service activation.	5.3.2.18.5.7	Y	Y	Y
358	The MG shall provide diagnostic tests to detect and verify faults, such as low loop resistance or ground conditions, or any other faults within the MG that could cause false ring trip or false answer.	5.3.2.18.5.8	Y	Y	Y
359	The MG shall support the collection of the standard DS1, DS3, Physical Layer Convergence Protocol (PLCP), SONET, and ISDN BRI line performance monitoring requirements, as defined in Telcordia Technologies GR-820-CORE, for applicable interfaces.	5.3.2.18.5.9	Y	Y	Y
360	For the selected recording format that is chosen, of all the call information that will be provided, the following call data shall be provided in the record data: 1. Host Name of the CCA controlling the call processing. 2. Start Date of call (In Julian or Calendar). 3. Start Time of Call (Hour + Minute + Second). 4. Elapsed Time of Call and/or Stop Time of call. 5. Calling Number. 6. Called Number (included all dialed digits).	5.3.2.19.2.1	Y	Y	Y
361	For the selected recording format that is chosen, of all the call information that will be provided, the following call data shall be provided in the record data if it applies to the call: Conference Call Indicator.	5.3.2.19.2.1	Y	Y	Y
362	The product shall provide a voice quality record at the completion of each voice session. The voice quality record shall be included in the CDR that the LSC, MFSS, or WAN SS generates for that session, and shall conform to the E-Model, as described in TIA TSB-116-A, and ITU-T Recommendation G.107. The voice quality record shall contain the calculated R-Factor for the Voice session per TIA TSB-116-A.	5.3.2.19.2.1.1	Y	Y	Y
363	As part of the voice quality record, the product shall provide the raw voice session statistics that are used to make the R-Factor calculation to include, as a minimum, the latency, packet loss, Equipment Impairment Factor (Ie), and the TCLw. The product shall provide the jitter for the session.	5.3.2.19.2.1.1	Y	Y	Y
364	The product shall generate an alarm to the VVoIP EMS when the session R-Factor calculation in the CDR fails to meet a configurable threshold. By default, the threshold shall be an R-Factor value of 80, which is equivalent to an MOS value of 4.0.	5.3.2.19.2.1.1	Y	Y	Y
365	The mass storage in the BA must be non-volatile. The mass storage in the BA must be able to retain at least five average-busy-season business days of AMA data. (NOTE: This is needed to provide adequate capacity for high-volume storage of CDRs.)	5.3.2.19.2.3	Y	Y	Y
366	The BA should be able to output the records electronically over a secured connection. The BA should have the ability to transfer the records to a physical storage media that is also removable.	5.3.2.19.2.4	Y	Y	Y

Table 3-1. Unified Capabilities Products Capability/Functional Requirements Table (continued)

LEGEND:

ACD	Automatic Call Distributor
AEI	AS-SIP End Instrument
AMA	Automatic Message Accounting
ANAT	Alternative Network Address Types
ANSI	American National Standards Institue
ASAC	Assured Services Admission Control
ASLAN	Assured Services Local Area Network
AS-SIP	Assured Services Session Initiation Protocol
ATQA	Attendant Queue Announcement
B2BUA	Back-to-back User Agent
BA	Billing Agent
BER	Bit Error Rate
BLV	Busy Line Verification
BNF	Backus-Naur Form
C	Conditional
C2	Command and Control
CAC	Common Access Card
CAS	Channel Associated Signaling
CCA	Call Connection Agent
CCS7	Common Channel Signaling 7
CDR	Call Data Record
CE	Customer Edge
CF	Call Forward
CH1	Change 1
CID	Craft Input Device
CND	Calling Number Delivery
CONUS	Continental United States
D-Channel	Data Channel
DB	Database
DHCP	Dynamic Host Configuration Protocol
DISA	Defense Information Systems Agency
DISN	Defense Information System Network
DN	Directory Number
DoD	Department of Defense
DS1	Digital Signal Level 1
DS3	Digital Signal Level 3
DSCP	Differentiated Services Code Point
DSN	Defense Switched Network
E2E	End-to-end
EBC	Edge Boundary Controller
EC	Echo Canceller
EI	End Instrument
EMS	Element Management System
EO	End Office
ETSI	European Telecommunications Standards Institute
FCAPS	Fault, Configuration, Accounting, Performance, and Security
FoIP	Fax over Internet Protocol
FQDN	Fully Qualified Domain Name
G3 Fax	Group 3 Facsimile
Hz	Hertz
IAD	Integrated Access Device
IAW	In Accordance With
ICA	Isolated Code Announcement
ID	Identification
ICMPv6	Internet Control Message Protocol for IPv6
Ie	Equipment Impairment Factor
IEEE	Institute of Electrical and Electronics Engineers, Inc.
IETF	Internet Engineering Task Force
IP	Internet Protocol
IPB	IP ASAC Budget
IPC	IP ASAC Call Count
IPSec	Internet Protocol Security
IPv4	Internet Protocol Version 4
IPv6	Internet Protocol Version 6
ISDN	Integrated Services Digital Network
ISUP	ISN User Part
ITU-T	International Telecommunications Union – Telecommunication Standardization Sector
IWF	Interworking Function
kbps	Kilobytes per second
LAN	Local Area Network
LDAP	Lightweight Directory Access Protocol
LDAPv3	Lightweight Directory Access Protocol version 3
LSC	Local Session Controller
MAC	Media Access Control
Mbps	Megabytes per second
MFS	Multifunction Switch
MFSS	Multifunction SoftSwitch
MG	Media Gateway
MGC	Media Gateway Controller
MLD	Multicast Listener Discovery
MLPP	Multilevel Precedence and Preemption
Modem	Modulator/Demodulator
MoIP	Modem over Internet Protocol
MOS	Mean Opinion Score
MPLS	Multiprotocol Label Switching
ms	milliseconds
MTU	Maximum Transmission Unit
NE	Network Element
NM	Network Management
NMS	Network Management System
OA&M	Operations, Administration, and Maintenance
OCONUS	Outside the Continental United States
OSI	Open Systems Interconnect
OTGR	Operations Technology Generic Requirements
PBAS	Precedence Based Assured Services
PBX	Private Branch Exchange
PCD	Precedence Call Diversion
PCM	Pulse Code Modulation
PEI	Proprietary End Instrument
PLCP	Physical Layer Convergence Protocol
PRI	Primary Rate Interface
PSTN	Public Switch Telephone Network
REL	Release Message
RFC	Request For Communication
RTS	Real Time Services
SAC	Session Admission Control
SBU	Sensitive, but Unclassified
SCIP	Secure Communications Interoperability Protocol
SCS	Session Control and Signaling
SDP	Session Description Protocol
SG	Signaling Gateway
SIP	Session Initiation Protocol
SMEO	Small End Office
SONET	Synchronous Optical Network
SRTCP	Secure Real-Time Transport Control Protocol
SRTP	Secure Real-Time Transport Protocol
SS	Softswitch
SS7	Signaling System number 7
SUT	System Under Test
TA	Terminal Adaptor
TCA	Threshold Crossing Alert
TCLw	Weighted Terminal Coupling Loss
TDM	Time Division Multiplexing
TIA	Telecommunications Industry Association
TLS	Transport Layer Security
UAC	User Agent Client
UAS	User Agent Server
UC	Unified Capabilities
UCR	Unified Capabilities Requirements
UDP	User Datagram Protocol
URI	Uniform Resource Identifier
U.S.	United States
VBD	Voice Band Data
VoIP	Voice over Internet Protocol
VVoIP	Voice and Video over Internet Protocol
WAN	Wide Area Network
Y	Yes