DEFENSE INFORMATION SYSTEMS AGENCY
P. O. BOX 549
FORT MEADE, MARYLAND 20755-0549

IN REPLY REFER TO: Joint Interoperability Test Command (JTE) **27 Sep 12**

MEMORANDUM FOR DISTRIBUTION

SUBJECT: Special Interoperability Test Certification of the Avaya Aura® Application Server (AS) 5300 with Software Release 3.0 Wide Area Network (WAN) Softswitch (SS) with integrated Local Session Controller (LSC)

References: (a) DoD Directive 4630.05, "Interoperability and Supportability of Information Technology (IT) and National Security Systems (NSS)," 5 May 2004
(b) CJCSI 6212.01E, "Interoperability and Supportability of Information Technology and National Security Systems," 15 December 2008
(c) through (f), see Enclosure 1

1. References (a) and (b) establish Defense Information Systems Agency (DISA) Joint Interoperability Test Command (JITC), as the responsible organization for interoperability test certification. Reference (c) further establishes JITC as the interoperability Certification Authority (CA) for all Unified Capabilities (UC) products.

2. The Avaya Aura® AS 5300 with Software Release 3.0; hereinafter referred to as the System Under Test (SUT), is certified for joint use within the Defense Information System Network (DISN) as a WAN SS with an integrated LSC. The SUT is certified in the United States, including the Continental United States (CONUS), Alaska, Hawaii, and U.S. Caribbean and Pacific Territories. Although the SUT supports European Basic Multiplex Rate (E1) interfaces, they were not tested and are not covered under this certification. Therefore, the SUT is not certified for joint use outside CONUS in European Telecommunications Standards Institute (ETSI)-compliant countries. The fielding of the SUT is limited to IP version 4 (IPv4) across the DISN. Although the SUT supports Internet Protocol version 6 (IPv6), it was not tested inter-enclave because of a limitation of the test network Edge Boundary Controller (EBC) which currently does not support end-to-end IPv6. Therefore, IPv6 is not covered under this certification. JITC will verify inter-enclave IPv6 capabilities of the SUT prior to amending the certification to include the capability. Intra-enclave use of IPv4 and IPv6 is authorized for use. Any new discrepancy noted in the operational environment will be evaluated for impact on the existing certification. These discrepancies will be adjudicated to the satisfaction of DISA via a vendor Plan of Actions and Milestones (POA&M), which will address all new critical Test Discrepancy Reports (TDRs) within 120 days of identification. Testing was conducted using WAN SS and LSC product requirements derived from the Unified Capabilities Requirements (UCR), Reference (d), and WAN SS and LSC test procedures, Reference (e). No other configurations, features, or functions, except those cited within this memorandum, are certified by JITC. This certification expires upon changes that affect interoperability, but no later than three years from the date of the UC Approved Products List (APL) memorandum.

3. This finding is based on interoperability testing conducted by JITC, DISA adjudication of open TDRs, review of the vendor's Letters of Compliance (LoC), and DISA CA approval of the Information Assurance (IA) configuration. Interoperability testing was conducted by JITC, Fort Huachuca, Arizona, from 27 February through 20 April 2012. Additional interoperability testing was conducted from 14 May to 8 June 2012 to address test procedures not completed during the intial test window as well as new firmware on the SUT's end instruments. Review of the vendor's LoC was completed on 11 July 2012. DISA adjudication of outstanding TDRs was completed on 2 August 2012. Additional interoperability testing was conducted from 6 through 8 August 2012, which resulted in the successful demonstration of International Telecommunication Union - Telecommunication Standardization Sector T.38 fax functionality. The DISA CA has reviewed the IA Assessment Report for the SUT, Reference (f), and based on the findings in the report has provided a positive recommendation on 27 September 2012. The acquiring agency or site will be responsible for the Department of Defense (DoD) Information Assurance Certification and Accreditation Process (DIACAP) accreditation. Enclosure 2 documents the test results and describes the tested network and system configurations.

4. The interface, Capability Requirements (CR) and Functional Requirements (FR), and component status of the SUT are listed in Tables 1 and 2. The threshold Capability/Functional requirements for WAN SSs and LSCs are established by Sections 5.3.2, 5.3.4, and 5.3.5 of Reference (d) and were used to evaluate the interoperability of the SUT. Enclosure 3 provides a detailed list of WAN SS and LSC requirements.

Table 1. SUT Interface Interoperability Status

Interface	Critical	UCR Reference	Threshold CR/FR Requirements[1]	Status	Remarks
Line Interfaces[2]					
10Base-X	Yes	5.3.2.6.3	1, 2, 3, 4, 5, 6, 8, 9, 10, 11, 12, 15, 18, 20, 21	Certified	Met threshold CRs/FRs for IEEE 802.3i and 802.3j with the SUT PEIs.
100Base-X	Yes	5.3.2.6.3	1, 2, 3, 4, 5, 6, 8, 9, 10, 11, 12, 15, 18, 20, 21	Certified	Met threshold CRs/FRs for IEEE 802.3u with the SUT PEIs.
1000Base-X	No	5.3.2.6.3	1, 2, 3, 4, 5, 6, 8, 9, 10, 11, 12, 15, 18, 20, 21	Certified	Met threshold CRs/FRs for IEEE 802.3z with the SUT PEIs.
2-wire analog	Yes	5.3.2.6.1.6	1, 2, 3, 4, 5, 6, 8, 9, 10, 11, 12, 15, 18, 20, 21	Certified	Met threshold CRs/FRs for 2-wire analog interfaces with the SUT IAD.
ISDN BRI	No	5.3.2.6.1.8	1, 2, 3, 4, 5, 6, 8, 9, 10, 11, 12, 15, 18, 20, 21	Not Tested	This interface is not supported by the SUT and is not required for an LSC.
External Interfaces[3]					
10Base-X	Yes	5.3.2.4.2	1, 2, 3, 4, 5, 6, 7, 8, 9, 10, 11, 12, 13, 14, 15, 16, 17, 18, 19	Certified	Met threshold CRs/FRs for IEEE 802.3i and 802.3j for the AS-SIP trunk.
100Base-X	Yes	5.3.2.4.2	1, 2, 3, 4, 5, 6, 7, 8, 9, 10, 11, 12, 13, 14, 15, 16, 17, 18, 19	Certified	Met threshold CRs/FRs for IEEE 802.3u for the AS-SIP trunk.
1000Base-X	Yes	5.3.2.4.2	1, 2, 3, 4, 5, 6, 7, 8, 9, 10, 11, 12, 13, 14, 15, 16, 17, 18, 19	Certified	Met threshold CRs/FRs for IEEE 802.3ab and 802.3z for the AS-SIP trunk.
ISDN T1 PRI ANSI T1.619a	Yes	5.3.2.4.3	1, 2, 3, 4, 5, 6, 7, 8, 9, 10, 11, 12, 13, 14, 15, 16, 17, 18, 19	Certified	Met threshold CRs/FRs. This interface provides legacy DSN and TELEPORT connectivity.
ISDN T1 PRI NI-2	Yes	5.3.2.4.3	1, 2, 3, 4, 5, 6, 7, 8, 9, 10, 11, 12, 13, 14, 15, 16, 17, 18, 19	Certified	Met threshold CRs/FRs. This interface provides PSTN connectivity.

Table 1. SUT Interface Interoperability Status (continued)

Interface	Critical	UCR Reference	Threshold CR/FR Requirements[1]	Status	Remarks
External Interfaces (continued)[3]					
T1 CCS7 ANSI T1.619a	No	5.3.2.12.9	1, 2, 3, 4, 5, 6, 7, 8, 9, 10, 11, 12, 13, 14, 15, 16, 17, 18, 19	Not Tested	Although this interface is offered by the SUT, it was not tested. This interface is not certified by JITC and is not required for a WAN SS or LSC.
T1 CAS	No	5.3.2.12.11	1, 2, 3, 4, 5, 6, 7, 8, 9, 10, 11, 12, 13, 14, 15, 16, 17, 18, 19	Not Tested	This interface is not offered by the SUT and it is not required for a WAN SS or LSC.
E1 PRI ITU-T Q.955.3	No[4]	5.3.2.12.10	1, 2, 3, 4, 5, 6, 7, 8, 9, 10, 11, 12, 13, 14, 15, 16, 17, 18, 19	Not Tested	Although this interface is offered by the SUT, it was not tested. This interface is not certified by JITC and is not required for a WAN SS or LSC.
E1 PRI ITU-T Q.931	No[4]	5.3.2.12.10	1, 2, 3, 4, 5, 6, 7, 8, 9, 10, 11, 12, 13, 14, 15, 16, 17, 18, 19	Not Tested	Although this interface is offered by the SUT, it was not tested. This interface is not certified by JITC and is not required for a WAN SS or LSC.
SONET OC-3	No	5.3.2.8.4	1, 2, 3, 4, 5, 6, 7, 8, 9, 10, 11, 12, 13, 14, 15, 16, 17, 18, 19	Certified[5]	Met threshold CRs/FRs for this interface via connection through the Avaya CS2100 SPM.
NM Interfaces[6]					
10Base-X	No[7]	5.3.2.4.4 5.3.2.7.2.8	20, 21	Certified	Met threshold CRs/FRs. Verified via LoC.
100Base-X	No[7]	5.3.2.4.4 5.3.2.7.2.8	20, 21	Certified	Met threshold CRs/FRs. Verified via LoC.
1000Base-X	No[7]	5.3.2.4.4 5.3.2.7.2.8	20, 21	Certified	Met threshold CRs/FRs. Verified via LoC.

NOTES:
1. The SUT high-level CR and FR ID numbers depicted in the Threshold CRs/FRs column can be cross-referenced in Table 2. These high-level CR/FR requirements refer to a detailed list of requirements provided in Enclosure 3.
2. The line interface requirements and statuses apply to the integrated LSC. Line interfaces are not required for a WAN SS.
3. The external interface requirements and statuses apply the both the WAN SS and integrated LSC with the exception of the SONET OC-3 interface. This is only supported on the WAN SS.
4. This interface is conditionally required for deployment in Europe.
5. The SUT was tested with an OC-3 interface from the AudioCodes Mediant 3000 to the Avaya CS2100 SPM. Neither the Avaya CS2100 nor its internal SPM component is part of the SUT.
6. The NM interface requirements and statuses apply to both the WAN SS and integrated LSC.
7. The SUT must provide a minimum of one of the listed interfaces.

Table 1. SUT Interface Interoperability Status (continued)

LEGEND:

10Base-X	10 Mbps Ethernet
100Base-X	100 Mbps Ethernet
1000Base-X	1000 Mbps Ethernet
802.3ab	Gigabit Ethernet Standard over twisted pair
802.3i	10 Mbps twisted pair media for 10Base-X networks
802.3j	10 Mbps fiber media for 10Base-X networks
802.3u	100BASE-TX, 100BASE-T4, 100BASE-FX Fast Ethernet at 100 Mbps with auto negotiation
802.3z	Gigabit Ethernet Standard
ANSI	American National Standards Institute
AS-SIP	Assured Services Session Initiation Protocol
BRI	Basic Rate Interface
CAS	Channel Associated Signaling
CCS7	Common Channel Signaling Number 7
CR	Capability Requirement
CS	Communication Server
DSN	Defense Switched Network
E1	European Basic Multiplex Rate (2.048 Mbps)
FR	Functional Requirement
IAD	Integrated Access Device
ID	Identification
IEEE	Institute of Electrical and Electronics Engineers
ISDN	Integrated Services Digital Network
ITU-T	International Telecommunication Union - Telecommunication Standardization Sector
JITC	Joint Interoperability Test Command
LoC	Letter of Compliance
LSC	Local Session Controller
Mbps	Megabits per second
MLPP	Multi-Level Precedence and Preemption
NI-2	National ISDN Standard 2
NM	Network Management
OC-3	Optical Carrier Level 3 (155 Mbps)
PEI	Proprietary End Instrument
PRI	Primary Rate Interface
PSTN	Public Switched Telephone Network
Q.931	Signaling Standard for ISDN
Q.955.3	ISDN Signaling Standard for E1 MLPP
SONET	Synchronous Optical Network
SPM	Spectrum Peripheral Module
SS	Softswitch
SS7	Signaling System 7
SUT	System Under Test
T1	Digital Transmission Link Level 1 (1.544 Mbps)
T1.619a	SS7 and ISDN MLPP Signaling Standard for T1
UCR	Unified Capabilities Requirements
WAN	Wide Area Network

Table 2. SUT Capability Requirements and Functional Requirements Status

CR/FR ID	Capability/Function	Applicability[1]	UCR Reference	Status
1	**Assured Services Product Features and Capabilities**			
	DSCP Packet Marking	Required[2]	5.3.2.2.1.4	Partially Met[3]
	Voice Features and Capabilities	Required	5.3.2.2.2.1	Partially Met[4, 5]
	Public Safety Features	Required	5.3.2.2.2.2	Partially Met[6]
	ASAC – Open Loop	Required[2]	5.3.2.2.2.3	Met
	Signaling Protocols	Required[2]	5.3.2.2.3	Partially Met[7]
	Signaling Performance	Conditional[2]	5.3.2.2.4	Met
2	**Registration, Authentication, and Failover**			
	Registration	Required	5.3.2.3.1	Met
	Failover	Required	5.3.2.3.2	Not Met[8, 9]
3	**Product Physical, Quality, and Environmental Factors**			
	Availability	Required	5.3.2.5.2.1	Met
	Maximum Downtimes	Required	5.3.2.5.2.2	Met
	Loss of Packets	Required[2]	5.3.2.5.4	Met
4	**Voice End Instruments**			
	Tones and Announcements	Required	5.3.2.6.1.1	Partially Met[10]
	Audio Codecs	Required[2]	5.3.2.6.1.2	Partially Met[11]
	VoIP PEI or AEI Audio Performance Requirements	Required[2]	5.3.2.6.1.3	Partially Met[7, 12]
	VoIP Sampling Standard	Required[2]	5.3.2.6.1.4	Met
	Authentication to LSC	Required[2]	5.3.2.6.1.5	Met
	Analog Telephone Support	Required[2]	5.3.2.6.1.6	Partially Met[13, 14]
	Softphones	Conditional[2]	5.3.2.6.1.7	Partially Met[3]
	ISDN BRI	Conditional[2]	5.3.2.6.1.8	Not Tested[15]

Table 2. SUT Capability Requirements and Functional Requirements Status (continued)

CR/FR ID	Capability/Function	Applicability[1]	UCR Reference	Status
5	**Video End Instruments**			
	Video End Instrument	Required[2]	5.3.2.6.2	Partially Met[16, 3]
	Display Messages, Tones, and Announcements	Required[2]	5.3.2.6.2.1	Partially Met[16, 3]
	Video Codecs (Including Associated Audio Codecs)	Required[2]	5.3.2.6.2.2	Partially Met[16, 3]
6	**LSC Requirements**			
	PBAS/ASAC Requirements	Required[2]	5.3.2.7.2.1	Met
	Calling Number Delivery Requirements	Required[2]	5.3.2.7.2.2	Met
	LSC Signaling Requirements	Required[2]	5.3.2.7.2.3	Met
	Service Requirements under Total Loss of WAN Transport	Required[2]	5.3.2.7.2.4	Met
	Local Location Server and Directory	Required[2]	5.3.2.7.2.5	Met
	LSC Transport Interface Functions	Required[2]	5.3.2.7.2.7	Met
	LSC to IP PEI, AEI, and Operator Console Status Verification	Required[2]	5.3.2.7.2.10	Not Met[7, 17]
	Line-Side Custom Features Interference	Conditional[2]	5.3.2.7.2.11	Met
	Loop Avoidance	Required[2]	5.3.2.7.3	Not Met[18]
7	**Policing Requirements**			
	Policing Requirements when Serving an AS-SIP – ITU-T H.323 Gateway	Required[19]	5.3.2.7.5.1.5	Not Tested[20]
8	**Global Location Server**			
	Global Location Server Requirements	Required[19]	5.3.2.8.2.2	Met
9	**Call Connection Agent Requirements**			
	CCA IWF Component	Required	5.3.2.9.2.1	Met
	CCA MGC Component	Required	5.3.2.9.2.2	Met
	SG Component	Conditional	5.3.2.9.2.3	Not Tested[15]
	CCA-IWF Support for AS-SIP	Required	5.3.2.9.5.1	Met
	CCA-IWF Support for SS7	Conditional	5.3.2.9.5.2	Not Tested[15]
	CCA-IWF Support for PRI via MG	Required	5.3.2.9.5.3	Met
	CCA-IWF Support for CAS Trunks via MG	Conditional	5.3.2.9.5.4	Not Tested[15]
	CCA-IWF Support for PEI and AEI Signaling Protocols	Required[2]	5.3.2.9.5.5	Partially Met[7, 16, 17]
	CCA-IWF Support for VoIP and TDM Protocol Interworking	Required	5.3.2.9.5.6	Met
	CCA Preservation of Call Ringing State during Failure Conditions	Required	5.3.2.9.6	Not Met[21]
	CCA Interactions with Transport Interface Functions	Required[2]	5.3.2.10.3	Met
	CCA Interactions with the EBC	Required[2]	5.3.2.10.4	Met
	CCA Support for Admission Control	Required	5.3.2.10.5	Met
	CCA Support for UFS	Required[2]	5.3.2.10.6	Met
	CCA Support for IA	Required	5.3.2.10.7	Met
	CCA Interaction with VoIP EIs	Required[2]	5.3.2.10.10	Partially Met[7, 16, 17]
	CCA Support for AS Voice and Video	Required[2]	5.3.2.10.11	Met[7, 12, 16]
	CCA Interactions with Service Control Functions	Required[2]	5.3.2.10.12	Met
	CCA Interworking between AS-SIP and SS7	Conditional[2]	5.3.2.11	Not Tested[15]

Table 2. SUT Capability Requirements and Functional Requirements Status (continued)

CR/FR ID	Capability/Function	Applicability[1]	UCR Reference	Status
10	**MG Requirements**			
	Role of MG In LSC	Required[2]	5.3.2.12.3.1	Partially Met[22]
	MG Support for ASAC	Required	5.3.2.12.4.1	Met
	MG and IA Functions	Required	5.3.2.12.4.2	Met
	MG Interaction with Service Control Function	Required[2]	5.3.2.12.4.3	Met
	MG Interactions with IP Transport Interface Functions	Required[2]	5.3.2.12.4.4	Met
	MG-EBC interactions	Required[2]	5.3.2.12.4.5	Met
	MG IP-Based PSTN Interface Requirements	Conditional	5.3.2.12.4.7	Not Tested[15]
	MG Interaction with VoIP EIs	Required[2]	5.3.2.12.4.8	Partially Met[7]
	MG support for User Features and Services	Required[2]	5.3.2.12.4.9	Met
	MG Interface to TDM	Required	5.3.2.12.5	Met
	MG Interface to TDM Allied and Coalition	Conditional	5.3.2.12.6	Not Tested[23]
	MG Interface to TDM PSTN in U.S.	Required	5.3.2.12.7	Met
	MG Interfaces to TDM PSTN OCONUS	Required	5.3.2.12.8	Not Tested[23]
	MG Support for CCS7	Conditional	5.3.2.12.9	Not Tested[15]
	MG Support for ISDN PRI Trunks	Required	5.3.2.12.10	Met
	MG Support for CAS Trunks	Conditional	5.3.2.12.11	Not Tested[15]
	MG requirements for VoIP Internal Interfaces	Required[2]	5.3.2.12.12	Met[24]
	MG Echo Cancellation	Required	5.3.2.12.13	Met
	MG Clock Timing	Required	5.3.2.12.14	Met
	MGC-MG CCA Functions	Required	5.3.2.12.15	Met
	MG ITU-T V.150.1	Required	5.3.2.12.16	Not Met[13, 14]
	MG Preservation of Call Ringing during Failure	Required	5.3.2.12.17	Not Met[21, 25]
11	**SG Requirements**			
	SG and CCS7 Network Interactions	Conditional	5.3.2.13.5.1	Not Tested[15]
	SG Interactions with CCA	Conditional	5.3.2.13.5.2	Not Tested[15]
	SG Interworking Functions	Conditional	5.3.2.13.5.3	Not Tested[15]
12	**WWNDP Requirements**			
	WWNDP	Required	5.3.2.16	Met
	DSN WWNDP	Required	5.3.2.16.1	Partially Met[26]
13	**Commercial Cost Avoidance**			
	Commercial Cost Avoidance	Required	5.3.2.23	Not Tested[27]
14	**AS-SIP Based for External Devices (Voicemail, Unified Messaging, and Automated Receiving Devices)**			
	AS-SIP Requirements for External Interfaces	Conditional[2]	5.3.2.24	Not Tested[15]
15	**Precedence Call Diversion**			
	Precedence Call Diversion	Required	5.3.2.25	Partially Met[17]
16	**Attendant Station Features**			
	Precedence and Preemption	Required[2]	5.3.2.26.1	Not Met[17]
	Call Display	Required[2]	5.3.2.26.2	Not Met[17]
	Class of Service Override	Required[2]	5.3.2.26.3	Not Met[17]
	Busy Override and Busy Verification	Required[2]	5.3.2.26.4	Not Met[17]
	Night service	Required[2]	5.3.2.26.5	Not Met[17]
	Automatic Recall of Attendant	Required[2]	5.3.2.26.6	Not Met[17]
	Calls in Queue to the Attendant	Required[2]	5.3.2.26.7	Not Met[17]

Table 2. SUT Capability Requirements and Functional Requirements Status (continued)

CR/FR ID	Capability/Function	Applicability[1]	UCR Reference	Status
17	**RTS Routing Database Requirements**			
	WAN SS to LRDB Interface: DB Queries for HR	Required[19]	5.3.2.28.2	Not Tested[27]
	HR Query from WAN SS	Required[19]	5.3.2.28.2.1	Not Tested[27]
	WAN SS Actions Based on DB Response	Required[19]	5.3.2.28.2.4	Not Tested[27]
	LSC to LRDB Interface: DB Queries for CCA	Required[2]	5.3.2.28.3	Not Tested[27]
	CCA Query from LSC	Required[2]	5.3.2.28.3.1	Not Tested[27]
	DB Response When Commercial Number is Not Found	Required[2]	5.3.2.28.3.3	Not Tested[27]
	LSC to MRDB Interface: DB Updates for CCA and HR	Required[2]	5.3.2.28.4	Not Tested[27]
	LDAP Update Operations	Required[2]	5.3.2.28.4.1	Not Tested[27]
	RTS Routing DB "Opt Out" for LSC End Users	Required[2]	5.3.2.28.4.2	Not Tested[27]
	Request Processing	Required[2]	5.3.2.28.5.2.3	Not Tested[27]
	Client Time-Out	Required	5.3.2.28.5.2.3.1	Not Tested[27]
	Data Caching	Required	5.3.2.28.5.2.4.2	Not Tested[27]
	Failover Procedures	Required	5.3.2.28.5.2.5	Not Tested[27]
	MRDB Failover	Required[2]	5.3.2.28.5.2.5.1	Not Tested[27]
	LRDB Failover	Required	5.3.2.28.5.2.5.2	Not Tested[27]
	Alarms	Required	5.3.2.28.6.3	Not Tested[27]
	Logs	Required	5.3.2.28.6.4	Not Tested[27]
	Performance Monitoring	Conditional	5.3.2.28.6.7	Not Tested[27]
	HR Requirements for Preventing PRI "Hairpin" Routes	Required[3]	5.3.2.28.8	Not Tested[27]
	SS Requirements for TBCT	Required[3]	5.3.2.28.8.1	Not Tested[27]
	SS Requirements for DSN HR	Required[3]	5.3.2.28.8.2	Not Tested[27]
	SS HR Call Flow using DSN HR	Required[3]	5.3.2.28.8.2.3	Not Tested[27]
18	**AS-SIP Requirements**			
	SIP Requirements for AS-SIP Signaling Appliances and AS-SIP EIs	Required[2]	5.3.4.7	Partially Met[7]
	SIP Session Keep-Alive Timer	Required	5.3.4.8	Met
	Session Description Protocol	Required	5.3.4.9	Met
	Precedence and Preemption	Required	5.3.4.10	Met
	Policing of Call Count Thresholds	Required[19]	5.3.4.11	Met
	Video Telephony – General Rules	Required	5.3.4.12	Met
	Calling Services	Required	5.3.4.13	Met
	SIP Translation Requirements for Inter-working AS-SIP Signaling Appliances	Required	5.3.4.14	Met
	Relevant Timers for the Terminating Gateway and the Originating Gateway	Required	5.3.4.15	Not Tested[28]
	SIP Requirements for Interworking AS-SIP Signaling Appliances	Required	5.3.4.16	Met
	Keep-Alive Timer Requirements for Interworking AS-SIP Signaling Appliances	Required	5.3.4.17	Met
	Precedence and Preemption Extensions for Interworking AS-SIP Signaling Appliances	Required	5.3.4.18	Met
	Supplementary Services	Required	5.3.4.19	Met
19	**IPv6 Requirements**			
	Product Requirements	Required	5.3.5.4	Partially Met[29]
20	**NM Requirements**			
	LSC Management Function	Required[2]	5.3.2.7.2.6	Met
	VVoIP NMS Interface Requirements	Required	5.3.2.4.4	Met
	General Management requirements	Required	5.3.2.17.2	Met
	Requirement for FCAPS Management	Required	5.3.2.17.3	Partially Met[30, 31]
	NM requirements of Appliance Functions	Required	5.3.2.18	Met
	Accounting Management	Required	5.3.2.19	Met
21	**Information Assurance**			
	Information Assurance Requirements	Required	5.4	Met[32]

Table 2. SUT Capability Requirements and Functional Requirements Status (continued)

NOTES:

1. The annotation of 'required' refers to a high-level requirement category. The applicability of each sub-requirement is provided in Enclosure 3.
2. This requirement applies specifically to the integrated LSC and not to the WAN SS.
3. The SUT softphones do not support a distinct DSCP tag for each of the five precedence levels. Only one DSCP tag is supported for all precedence levels. This is a limitation of the operating system on the softphones (Microsoft Windows 7) and cannot be changed by the vendor. DISA adjudicated this as minor since all voice is queued together in the four-queue model currently used in deployed ASLANs. This discrepancy applies to the integrated LSC.
4. The SUT does not support a reminder ring notification with Call Forwarding Variable. DISA adjudicated this as minor and stated the intent to change this requirement to conditional in the next version of the UCR.
5. When the SUT is in a call with the Cisco Unified Communications Manager 8.0(2), the SUT IP EIs do not release a call from hold and the call cannot be resumed. DISA adjudicated this as minor with the vendor POA&M to resolve this issue by 17 October 2012. This discrepancy applies to the integrated LSC.
6. The SUT allows the preemption of a 911 caller and the 911 operator. DISA has accepted and approved the vendor's POA&M and adjudicated this discrepancy as having a minor operational impact. This discrepancy applies to the integrated LSC.
7. Testing with the Teo AEI was unable to be completed due to issues with TLS and therefore the SUT is not certified with non-proprietary AEIs. DISA has accepted and approved the vendor's POA&M and adjudicated this discrepancy as having a minor operational impact. This discrepancy applies to the integrated LSC.
8. When the SUT fails over from the primary SESM to the secondary SESM, the SUT IP EI's configured to use IPv6 take approximately 10 to 15 minutes to register to the secondary SESM. After this time, the IP EI's do successfully register to the secondary SESM and gain full functionality. Also, the SUT IP EI's intermittently dropped active calls during the failover. DISA has accepted and approved the vendor's POA&M and adjudicated this discrepancy as having a minor operational impact. This discrepancy applies to the integrated LSC.
9. The SUT does not fully support SS and LSC dual-homing failover requirements. DISA adjudicated this discrepancy and determined that the UCR failover requirements are immature and require a rewrite. Avaya, in coordination with DISA NS2, has agreed to participate in a multi-vendor interoperability test event to test failover mechanisms between LSCs and SSs in the timeframe determined by DISA NS2 in order to address this discrepancy. The outcome of this event will help determine the path forward. DISA NS2 has agreed to a Condition of Fielding that the initial UC APL certification will not provide for failover capability and this certification is predicated on participation in and successful outcome from NS2 scheduled multi-vendor test event.
10. The SUT IAD EI's (Audiocodes 112/124) do not provide PNT during preempt for reuse scenarios. DISA has accepted and approved the vendor's POA&M and adjudicated this discrepancy as having a minor operational impact. This discrepancy applies to the integrated LSC.
11. The vendor submitted LoC states the SUT does not support the ITU-T G.722.1 voice codec. DISA has accepted and approved the vendor's POA&M and adjudicated this discrepancy as having a minor operational impact. This discrepancy applies to the integrated LSC.
12. The SUT PEI's were tested and met audio performance requirements. This discrepancy applies to the integrated LSC.
13. The SUT does not support the ITU-T V.150.1 protocol. DISA has accepted and approved the vendor's POA&M and adjudicated this discrepancy as having a minor operational impact.
14. The vendor cannot dynamically invoke ITU-T T.38 and ITU-T V.150.1 in accordance with UCR 2008, change 3, section 5.3.2.12.16. The vendor stated this is a limitation of the Audiocodes gateway and requires an update before this can be tested. DISA has accepted and approved the vendor's POA&M and adjudicated this discrepancy as having a minor operational impact.
15. This interface or capability is a conditional requirement for a WANN SS or LSC and was not tested.
16. The SUT demonstrated video requirements via Softphone only, not PEIs (Proprietary Hard Video Phones) nor AEI video phones. The vendor did not provide a PEI or AEI video capability. This was previously adjudicated for another vendor by DISA to have a low operational impact because of the limited deployment of PEIs with video. This discrepancy applies to the integrated LSC.
17. The SUT does not support an attendant console. DISA adjudicated this as minor and stated the intent to change this requirement to conditional in the next version of the UCR. Furthermore, the SUT meets all MLPP diversion requirements with an alternate DN in lieu of an attendant console in accordance with UCR 2008, Change 3, Section 5.3.2.2.2.1.2.5. This discrepancy applies to the integrated LSC.
18. The SUT is not capable of preventing or detecting and stopping hair-pin routing loops over ANSI T1.619a and commercial PRI trunk groups between a legacy switch and an LSC. DISA has accepted and approved the vendor's POA&M and adjudicated this discrepancy as having a minor operational impact. This discrepancy applies to the integrated LSC.
19. This requirement applies specifically to the WAN SS and not to the integrated LSC.
20. The SUT does not have an ITU-T H.323 gateway; therefore, this does not apply to the SUT.
21. The SUT allows AS-SIP sessions in a ringing state to fail when an internal failure occurs within the CCA. DISA has accepted and approved the vendor's POA&M and adjudicated this discrepancy as having a minor operational impact.
22. The AudioCodes M800 and M3K gateways do not allow a mix of PSTN/DSN trunk gateway configurations. Based on the vendor's POA&M from Release 2.0, the vendor stated this discrepancy would be fixed in AudioCodes version 6.02.054 and would be implemented in the AS 5300 Release 3 by 7 June 2012. However, Release 3 includes AudioCodes version 6.02A.043.001 and not 6.02A.054. DISA has accepted and approved the vendor's POA&M and adjudicated this discrepancy as having a minor operational impact. This discrepancy applies to the integrated LSC.

Table 2. SUT Capability Requirements and Functional Requirements Status (continued)

NOTES (continued):

23. This requirement states that the appliance suppliers should support TDM trunk groups on their MG product that can interconnect with NEs in U.S. allied and coalition partner networks worldwide or foreign country PTT networks (OCONUS) worldwide. This requirement is for interconnection with a foreign country. The SUT is certified for use in the U.S., including CONUS, Alaska, Hawaii, and U.S. Caribbean and Pacific Territories. Although the SUT supports E1 interfaces, they were not tested and are not covered under this certification.
24. The SUT MGs do not support analog trunks. DISA stated the intent to change analog trunks to optional for an LSC MG in the next version of the UCR. This discrepancy applies to the integrated LSC.
25. The SUT MGs allow AS-SIP sessions in ringing state to fail during internal failure in MG. DISA adjudicated this as minor and stated the intent to change this requirement to conditional in the next version of the UCR.
26. The SUT does not support domain directory. DISA has accepted and approved the vendor's POA&M and adjudicated this discrepancy as having a minor operational impact.
27. The vendor has an LDAP server which is covered under a separate Interoperability Certification listed on the UC APL; however, this LDAP feature was not tested with the Release 3.0. DISA adjudicated this as minor because it was tested with Release 2.0. This feature will be tested with Release 3.0 once the LDAP is installed at JITC.
28. This requirement applies to gateways between AS-SIP and CCS7 links. Because CCS7 is a conditional requirement for WAN SSs and LSCs and not supported by the SUT, this requirement was not tested.
29. Per the vendor submitted LoC, the SUT does not properly support the following IPv6 requirements. The SUT does not support all DHCPv6 client messages and options. The SUT does not log all reconfigure events. The SUT SIP Core/Avaya Media Server does not allow disabling of duplicate address detection. DISA has accepted and approved the vendor's POA&M and adjudicated this discrepancy as having a minor operational impact.
30. The SUT is not fully compliant with following NM call detail records format requirements. The SUT does not provide a voice quality record at the completion of each voice session. DISA has accepted and approved the vendor’s POA&M and adjudicated this discrepancy as having a minor operational impact. The SUT has the ability to send the records over a secure connection. However, the SUT does not have the ability to transfer records to a removable physical storage media. DISA adjudicated this as minor and stated the intent to change this requirement to conditional in the next version of the UCR.
31. Although the SUT supports destination code controls, the SUT does not play the correct announcement to the calling party IAW the reference. DISA has accepted and approved the vendor's POA&M and adjudicated this discrepancy as having a minor operational impact.
32. The IA requirements are tested by an IA test team and the results published in a separate report, Reference (f).

Table 2. SUT Capability Requirements and Functional Requirements Status (continued)

LEGEND:

AEI	AS-SIP End Instrument
ANSI	American National Standards Institute
APL	Approved Products List
AS	Assured Services
ASAC	Assured Services Admission Control
AS-SIP	Assured Services Session Initiation Protocol
BRI	Basic Rate Interface
CAS	Channel Associated Signaling
CCA	Call Connection Agent
CCS7	Common Channel Signaling Number 7
CONUS	Continental United States
CR	Capability Requirement
DB	database
DHCPv6	Dynamic Host Control Protocol for IPv6
DISA	Defense Information Systems Agency
DN	Directory Number
DSCP	Differentiated Services Code Point
DSN	Defense Switched Network
E1	European Basic Multiplex Rate (2.048 Mbps)
EBC	Edge Boundary Controller
EI	End Instrument
FCAPS	Fault, Configuration, Accounting, Performance and Security
FR	Functional Requirement
G.722.1	ITU-T audio codec standard
H.323	Standard for multi-media communications on packet-based networks
HR	Hybrid Routing
IA	Information Assurance
IAD	Integrated Access Device
IAW	in accordance with
ID	Identification
IP	Internet Protocol
IPv6	Internet Protocol version 6
ISDN	Integrated Services Digital Network
ITU-T	International Telecommunication Union - Telecommunication Standardization Sector
IWF	Interworking Function
JITC	Joint Interoperability Test Command
LDAP	Lightweight Directory Access Protocol
LoC	Letter of Compliance
LRDB	Local Routing Database
LSC	Local Session Controller
Mbps	Megabits per second
MG	Media Gateway
MGC	Media Gateway Controller
MLPP	Multi-Level Precedence and Preemption
MRDB	Master Routing Database
NE	Network Element
NM	Network Management
NMS	Network Management System
NS2	Network Services
OCONUS	Outside the Continental United States
PBAS	Precedence Based Assured Services
PEI	Proprietary End Instrument
PNT	Precedence Notification Tone
POA&M	Plan of Action and Milestones
PRI	Primary Rate Interface
PSTN	Public Switched Telephone Network
PTT	Push-to-Talk
RTS	Real Time Services
SESM	Session Manager
SG	Signaling Gateway
SIP	Session Initiation Protocol
SS	Softswitch
SS7	Signaling System 7
SUT	System Under Test
T1	Digital Transmission Link Level 1 (1.544 Mbps)
T1.619a	SS7 and ISDN MLPP Signaling Standard for T1
T.38	Fax over IP
TBCT	Two B-channel Transfer
TDM	Time Division Multiplexing
TLS	Transport Layer Security
UC	Unified Capabilities
UCR	Unified Capabilities Requirements
UFS	User Features and Services
U.S.	United States
V.150	Modem over Internet Protocol Networks
VoIP	Voice over Internet Protocol
VVoIP	Voice and Video over Internet Protocol
WAN	Wide Area Network
WWNDP	Worldwide Numbering and Dialing Plan

5. No detailed test report was developed in accordance with the Program Manager's request. JITC distributes interoperability information via the JITC Electronic Report Distribution (ERD) system, which uses Unclassified-But-Sensitive Internet Protocol Router Network (NIPRNet) e-mail. More comprehensive interoperability status information is available via the JITC System Tracking Program (STP). The STP is accessible by .mil/gov users on the NIPRNet at https://stp.fhu.disa.mil. Test reports, lessons learned, and related testing documents and references are on the JITC Joint Interoperability Tool (JIT) at http://jit.fhu.disa.mil (NIPRNet). Information related to DSN testing is on the Telecom Switched Services Interoperability (TSSI) website at http://jitc.fhu.disa.mil/tssi. Due to the sensitivity of the information, the Information Assurance Accreditation Package (IAAP) that contains the approved configuration and deployment guide must be requested directly through government civilian or uniformed military

personnel from the Unified Capabilities Certification Office (UCCO), e-mail: disa.meade.ns.list.unified-capabilities-certification-office@mail.mil. All associated data is available on the DISA UCCO website located at http://www.disa.mil/ucco/.

6. The JITC point of contact is Capt Stéphane Arsenault, DSN 879-5269, commercial (520) 538-5269, FAX DSN 879-4347, or e-mail to Stephane.P.Arsenault.fm@mail.mil. JITC's mailing address is P.O. Box 12798, Fort Huachuca, AZ 85670-2798. The UCCO tracking number for the SUT is 1129301.

FOR THE COMMANDER:

3 Enclosures a/s

for RICHARD A. MEADOR
Chief
Battlespace Communications Portfolio

Distribution (electronic mail):
DoD CIO
Joint Staff J-6, JCS
USD(AT&L)
ISG Secretariat, DISA, JTA
U.S. Strategic Command, J665
US Navy, OPNAV N2/N6FP12
US Army, DA-OSA, CIO/G-6 ASA(ALT), SAIS-IOQ
US Air Force, A3CNN/A6CNN
US Marine Corps, MARCORSYSCOM, SIAT, A&CE Division
US Coast Guard, CG-64
DISA/TEMC
DIA, Office of the Acquisition Executive
NSG Interoperability Assessment Team
DOT&E, Netcentric Systems and Naval Warfare
Medical Health Systems, JMIS IV&V
HQUSAISEC, AMSEL-IE-IS
UCCO

ADDITIONAL REFERENCES

(c) Department of Defense Instruction 8100.04, "DoD Unified Capabilities (UC)," 9 December 2010
(d) Office of the Assistant Secretary of Defense, "Department of Defense Unified Capabilities Requirements 2008, Change 3," September 2011
(e) Joint Interoperability Test Command, "Unified Capabilities Test Plan (UCTP)," Draft
(f) Joint Interoperability Test Command, "Information Assurance (IA) Assessment of Avaya Application Server (AS) 5300 Release (Rel.) 3.0 Wide Area Network (WAN) Soft Switch (SS) (Tracking Number 1129301)," Draft

CERTIFICATION TESTING SUMMARY

1. SYSTEM TITLE. Avaya Aura® Application Server (AS) 5300 with Software Release 3.0 Wide Area Network (WAN) Softswitch (SS) with integrated Local Session Controller (LSC); hereinafter referred to as the System Under Test (SUT).

2. SPONSOR. Defense Information Systems Agency (DISA), Captain Jonathan Williams, Post Office Box 549, Fort Meade, Maryland 20755, e-mail: jonathan.w.williams26@mail.mil.

3. SYSTEM POC. Avaya Government Solutions, Ms. Nakia Brice, 12730 Fair Lakes Circle, Fairfax, Virginia, 22033-4901, e-mail: nakia.brice@avayagov.com.

4. TESTER. Joint Interoperability Test Command (JITC), Fort Huachuca, Arizona.

5. SYSTEM DESCRIPTION. The SUT SS servers use Ethernet interfaces that are connected to the service provider's Data Communication Network (DCN), and is configured using Provisioning Manager (PROV) System Manager Graphical user Interface. All management traffic to and from network elements, clients and higher-level management systems travel over these interfaces.

The SS with integrated LSC is a software-based Voice and Video over Internet Protocol (VVoIP) product which includes legacy 2-wire telephones, Internet Protocol (IP) telephones, and media processing devices within a local service domain. Additionally, an LSC extends signaling and call control services to allow calls to reach connections outside the local service domain. The LSC software and functions may be distributed physically among several high-availability server platforms with redundant call management modules and subscriber tables to provide robustness.

The SUT is a secure Unified Capabilities (UC) system which provides integrated IP telephony, conferencing, and voice mail that meets Department of Defense (DoD) security and service assurance requirements. Although the SUT supports voice and video conferencing, only voice conferencing was tested and is certified for joint use. The SUT is used for creating, modifying, and terminating two-party (unicast) or multiparty (multicast) media streams.

The SUT supports the Session Initiation Protocol (SIP), Assured Services Session Initiation Protocol (AS-SIP), Secure Real-Time Transport Protocol (SRTP), Session Description Protocol (SDP), Security Descriptions for Media Streams, Transport Layer Security (TLS), Nortel encrypted Unified Networks Internet Protocol Stimulus (UNIStim), Multi-Level Precedence and Preemption (MLPP) using Primary Rate Interface (PRI) American National Standards Institute (ANSI) T1.619a.

The SUT is composed of the following components: SIP Core Operations, Administration, Maintenance and Provisioning (OAM&P) x2, SIP Core SS Session Manager (SESM) x2, SIP Core LSC SESM x2, Avaya Media Server (AMS) x2,

Management Workstation (site-provided), Switch Expert (SWEX) x2, AudioCodes EMS, AudioCodes Mediant (M)800 Gateway (GW), AudioCodes M3000 GW, UC Client (site-provided), AudioCodes M800 Integrated Access Device (IAD), AudioCodes Media Pack(MP)112 IAD, AudioCodes MP124 IAD, Analog Phone, 1140E SIP Phone, and 1120E SIP Phone.

- **SIP Core OAM&P x2.** These components facilitate communication between the system management console and other Real Time Services (RTS) AS 5300 network components. They also handle fault and performance functions for the RTS AS-SIP Core and AMS, and configuration functions for the SIP Core. The OAM&P functionality is fully redundant and continues to operate when a server or software component fails.

- **SIP Core SS SESM x2.** The SIP Core SS SESM is a service execution engine that provides the following software functionality: SIP Proxy Server, Back-to-Back User Agent (BBUA), Call Processing Language (CPL) Interpreter, Assured Service Admission Control (ASAC) Budgeting, and address resolution and routing capabilities. The solution supports MLPP with secure SIP signaling protocols.

- **SIP Core LSC SESM x2.** The SIP Core LSC SESM is a service execution engine that provides the following software functionality: SIP Proxy Server, BBUA, SIP Registrar, CPL Interpreter, ASAC Budgeting, and address resolution and routing capabilities. As an optional software feature of the Session Manager, the SIP Presence Manager processes information for presence subscription and notification. The solution supports MLPP with secure SIP signaling protocols, is fully redundant and continues to operate when a server or software component fails.

- **AMS x2.** Provides a flexible, high availability media services run time base and supports Secure SIP and SRTP secure media. Services provisioning and end user controls settings are through the AS 5300 SIP Core Provisioning Client and Personal Agent. AMS node management is via the AMS Management Console. These services host services such as conferencing, video, and Music on Hold (MOH).

- **Management Workstation (site-provided).** A standard Windows 7 platform computer installed with applications required to manage WASN SS and LSC system components.

- **SWEX x2.** The SWEX is installed on a standard server with Windows Server 2008 R2 OS platform and the SWEX application. The server provides combined monitoring of logs, alarms and billing from the AS 5300 solution and the Audio Codes EMS component. It collects information from the management elements that provide real time secure information in a single interface and for a single set of Operation Support System (OSS). User access to the server is from the SWEX client software installed on the management workstation

- **AudioCodes EMS.** The AudioCodes EMS maintains the database and configurations for the M3000 GW, MP112, and MP124 IADs.

- **AudioCodes M800 GW.** The M800 GW provides SIP to PRI connectivity from the AS 5300 (SIP) to the Defense Switched Network (DSN) Public Branch Exchange (PBX). This GW supports secure SIP Signaling and SRTP Secure Media with Integrated Services Digital Network (ISDN) PRI (ANSI T1.619a) support. Currently, the AudioCodes M800 and M3K gateways do not allow a mix of Public Switched Telephone Network (PSTN)/DSN trunk gateway configurations. Based on the vendor's Plan of Actions and Milestones (POA&M) from Release 2.0, the vendor stated this discrepancy would be fixed in AudioCodes version 6.02.054 and would be implemented in the AS 5300 Release 3 by 7 June 2012. However, Release 3 includes AudioCodes version 6.02A.043.001 and not 6.02A.054. DISA has accepted and approved the vendor's POA&M and adjudicated this discrepancy as having a minor operational impact. The M800 GW currently supports one European Basic Multiplex Rate (E1)/Digital Transmission Link Level 1 (T1) line. Although the SUT supports E1 interfaces, they were not tested and are not covered under this certification. Therefore, the SUT is certified for use in the U.S., including the Continental United States (CONUS), Alaska, Hawaii, and U.S. Caribbean and Pacific Territories. The SUT is not certified for joint use outside CONUS in European Telecommunications Standards Institute (ETSI)-compliant countries.

- **AudioCodes M3000 GW.** The M3000 GW provides SIP to PRI connectivity from the AS 5300 (SIP) to the DSN PBX. This GW supports secure SIP signaling and SRTP Secure Media, with ANSI T1.619a support. Currently, the AudioCodes M800 and M3K gateways do not allow a mix of PSTN/DSN trunk gateway configurations. Based on the vendor's POA&M from Release 2.0, the vendor stated this discrepancy would be fixed in AudioCodes version 6.02.054 and would be implemented in the AS 5300 Release 3 by 7 June 2012. However, Release 3 includes AudioCodes version 6.02A.043.001 and not 6.02A.054. DISA has accepted and approved the vendor's POA&M and adjudicated this discrepancy as having a minor operational impact. The M3000 GW supports up to 84 E1/T1 lines. Although the SUT supports E1 interfaces, they were not tested and are not covered under this certification. The SUT is certified for use in the U.S., including CONUS, Alaska, Hawaii, and U.S. Caribbean and Pacific Territories. The SUT is not certified for joint use outside CONUS in ETSI-compliant countries. The SUT SS interfaces to legacy Multi-Function Switches via the M3000 Trunking Gateway Optical Carrier Level 3 (OC-3).

- **UC Client (site-provided).** The softclient is a standard Windows 7 platform computer with the AS-SIP UC Client application installed. This softphone supports voice and video capabilities with Secure SIP over TLS, SRTP secured media, and MLPP. The softphone can be configured to operate on alternate Virtual Local Area Network (VLAN) or Network Interface Card (NIC) interfaces. The client can also be deployed as DSN/MLPP subscriber.

- **AudioCodes M800 IAD.** A Voice over Internet Protocol (VoIP) SIP to analog gateway with Secure SIP Signaling, SRTP media security, and MLPP support, which also provides an Analog-to-SIP gateway for Time Division Multiplexing (TDM) devices.

- **AudioCodes MP112 IAD.** A VoIP SIP to analog gateway with Secure SIP Signaling, SRTP media security, and MLPP support, which also provides an Analog-to-SIP gateway for TDM devices. This is a 12-port gateway supporting less than 96 users; therefore, this gateway does not require redundancy.

- **AudioCodes MP124 IAD.** A VoIP SIP to analog gateway with Secure SIP Signaling, SRTP media security, and MLPP support, which also provides an Analog-to-SIP gateway for TDM devices. This is a 24-port gateway supporting less than 96 users; therefore, this gateway does not require redundancy.

- **Analog Phone.** A plain-old-telephone used to place analog voice calls.

- **1140E SIP Phone.** A fully featured AS-SIP based Proprietary End Instrument (PEI) for voice with MLPP support.

- **1120E SIP Phone.** A fully featured AS-SIP based PEI for voice with MLPP support.

6. OPERATIONAL ARCHITECTURE. Figure 2-1 depicts the SS/LSC functional model and Figure 2-2 depicts the UC network architecture that the SUT may be used in.

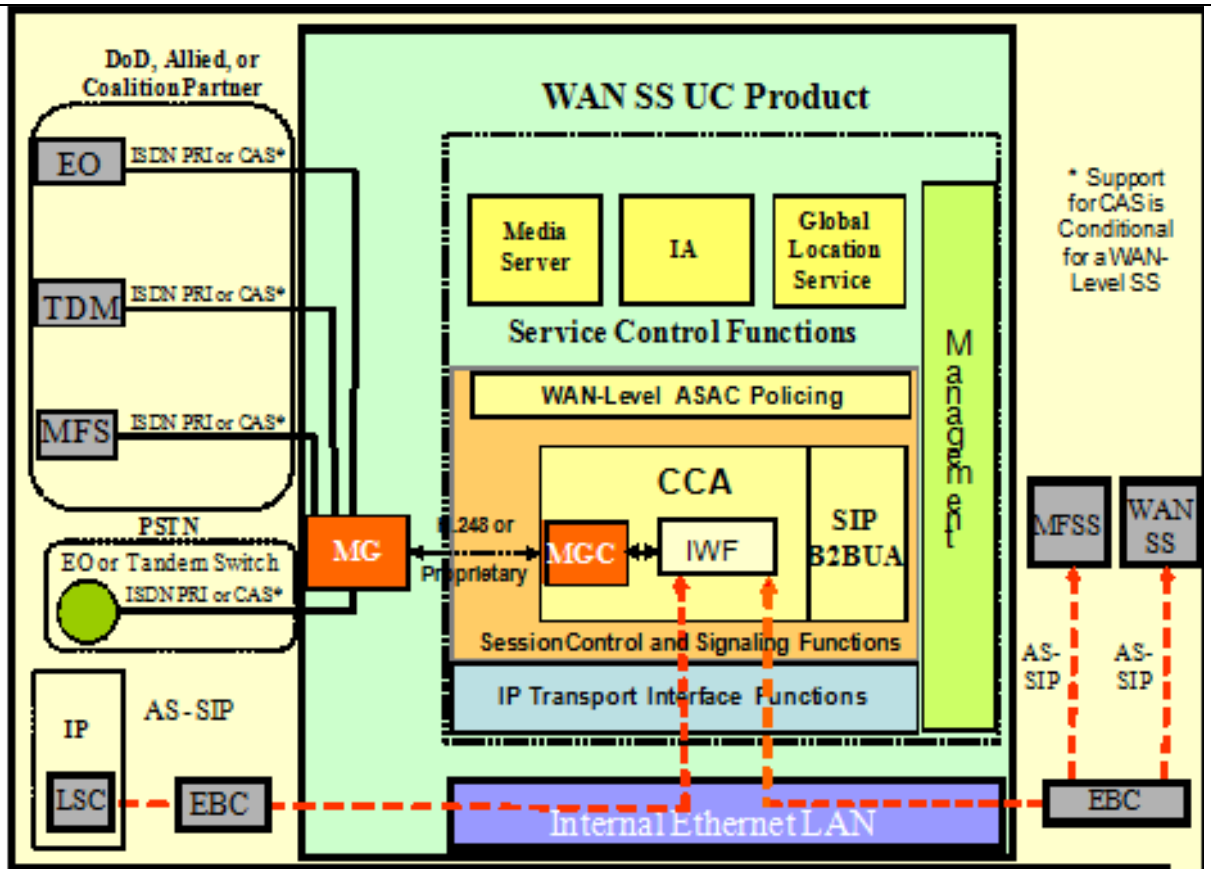

LEGEND:

ASAC	Assured Services Admission Control	LAN	Local Area Network
AS-SIP	Assured Services Session Initiation Protocol	LSC	Local Session Controller
B2BUA	Back-to-Back User Agent	MFS	Multifunction Switch
CAS	Channel Associated Signaling	MFSS	Multifunction Softswitch
CCA	Call Connection Agent	MG	Media Gateway
DoD	Department of Defense	MGC	Media Gateway Controller
EBC	Edge Boundary Controller	PRI	Primary Rate Interface
EO	End Office	PSTN	Public Switched Telephone Network
IA	Information Assurance	SIP	Session Initiation Protocol
IP	Internet Protocol	SS	Softswitch
ISDN	Integrated Services Digital Network	TDM	Time Division Multiplexing
IWF	Interworking Function	WAN	Wide Area Network

Figure 2-1. WAN SS Functional Reference Model

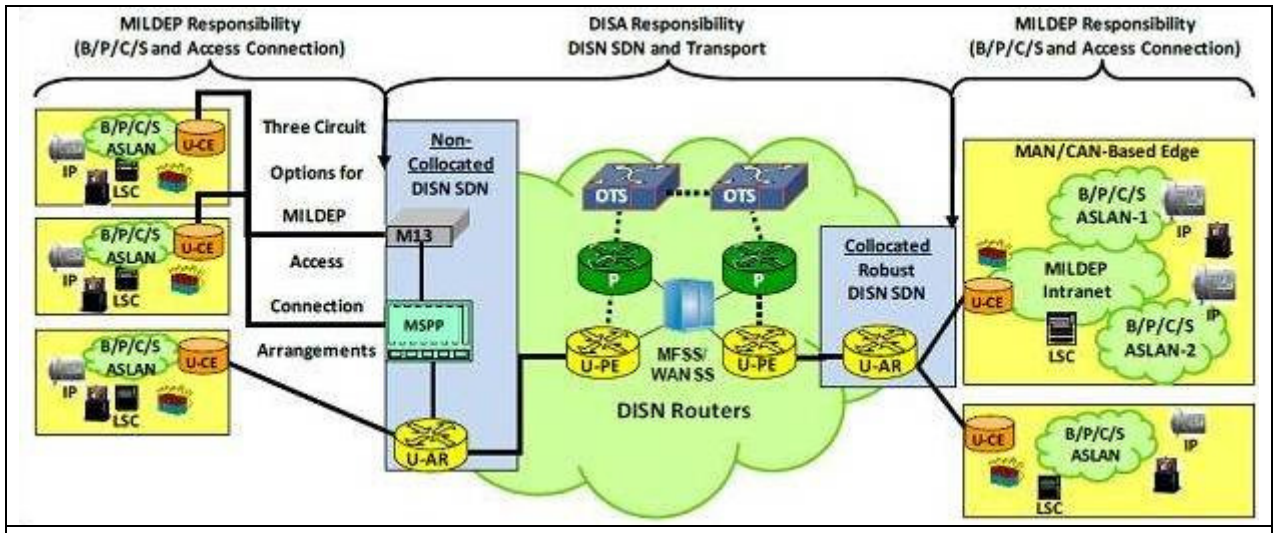

LEGEND:

ASLAN	Assured Services Local Area Network	MILDEP	Military Department
B/P/C/S	Base, Post, Camp, Station	MSPP	Multi-Service Provisioning Platform
CAN	Campus Area Network	OTS	Optical Transport System
DISA	Defense Information Systems Agency	P	Provider
DISN	Defense Information Systems Network	SDN	Service Delivery Node
IP	Internet Protocol	SS	Softswitch
LSC	Local Session Controller	U-AR	Unclassified Aggregation Router
M13	Multiplexer	U-CE	Unclassified Customer Edge Router
MAN	Metropolitan Area Network	U-PE	Unclassified Provider Edge Router
MFSS	Multifunction Softswitch	WAN	Wide Area Network

Figure 2-2. UC Network Architecture

7. INTEROPERABILITY REQUIREMENTS. The interface, Capability Requirements (CR) and Functional Requirements (FR), Information Assurance (IA), and other requirements for WAN SSs and LSCs are established by Sections 5.3.2, 5.3.4, 5.3.5, and 5.4 of Reference (d).

7.1 Interfaces. The SUT uses the external interfaces to connect to the Global Information Grid (GIG) network and other Unified Capabilities products. Table 2-1 documents the LSC physical interfaces and the associated standards.

Table 2-1. WAN SS with integrated LSC Interface Requirements

Interface	Critical	UCR Reference	Criteria[1]
Line Interfaces			
10Base-X	Yes	5.3.2.6.3	Support minimum threshold CRs/FRs (1, 2, 3, 4, 5, 6, 8, 9, 10, 11, 12, 15, 18, 20, 21) and meet interface criteria for IEEE 802.3i and IEEE 802.3j.
100Base-X	Yes	5.3.2.6.3	Support minimum threshold CRs/FRs (1, 2, 3, 4, 5, 6, 8, 9, 10, 11, 12, 15, 18, 20, 21) and meet interface criteria for IEEE 802.3.u.

Table 2-1. WAN SS with integrated LSC Interface Requirements (continued)

Interface	Critical	UCR Reference	Criteria[1]
Line Interfaces (continued)[2]			
1000Base-X	No	5.3.2.6.3	Support minimum threshold CRs/FRs (1, 2, 3, 4, 5, 6, 8, 9, 10, 11, 12, 15, 18, 20, 21) and meet interface criteria for IEEE 802.3z.
2-wire analog	Yes	5.3.2.6.1.6	Support minimum threshold CRs/FRs (1, 2, 3, 4, 5, 6, 8, 9, 10, 11, 12, 15, 18, 20, 21) and meet interface criteria for analog.
BRI	No	5.3.2.6.1.8	Support minimum threshold CRs/FRs (1, 2, 3, 4, 5, 6, 8, 9, 10, 11, 12, 15, 18, 20, 21) and meet interface criteria for BRI.
External Interfaces[3]			
10Base-X	Yes	5.3.2.4.2	Support minimum threshold CRs/FRs (1, 2, 3, 4, 5, 6, 7, 8, 9, 10, 11, 12, 13, 14, 15, 16, 17, 18, 19) and meet interface criteria for IEEE 802.3i and IEEE 802.3j.
100Base-X	Yes	5.3.2.4.2	Support minimum threshold CRs/FRs (1, 2, 3, 4, 5, 6, 7, 8, 9, 10, 11, 12, 13, 14, 15, 16, 17, 18, 19) and meet interface criteria for IEEE 802.3u.
1000Base-X	Yes	5.3.2.4.2	Support minimum threshold CRs/FRs (1, 2, 3, 4, 5, 6, 7, 8, 9, 10, 11, 12, 13, 14, 15, 16, 17, 18, 19) and meet interface criteria for IEEE 802.3ab and 802.3z.
ISDN T1 PRI ANSI T1.619a	Yes[4]	5.3.2.4.3	Support minimum threshold CRs/FRs (1, 2, 3, 4, 5, 6, 7, 8, 9, 10, 11, 12, 13, 14, 15, 16, 17, 18, 19) and meet interface criteria for ISDN T1 PRI (ANSI T1.619a).
ISDN T1 PRI NI-2	Yes[5]	5.3.2.4.3	Support minimum threshold CRs/FRs (1, 2, 3, 4, 5, 6, 7, 8, 9, 10, 11, 12, 13, 14, 15, 16, 17, 18, 19) and meet interface criteria for ISDN T1 PRI (NI-2) (ANSI T1.607).
T1 CCS7 ANSI T1.619a	No	5.3.2.12.9	Support minimum threshold CRs/FRs (1, 2, 3, 4, 5, 6, 7, 8, 9, 10, 11, 12, 13, 14, 15, 16, 17, 18, 19) and meet interface criteria for T1 CCS7 (ANSI T1.619a).
T1 CAS	No	5.3.2.12.11	Support minimum threshold CRs/FRs (1, 2, 3, 4, 5, 6, 7, 8, 9, 10, 11, 12, 13, 14, 15, 16, 17, 18, 19) and meet interface criteria for T1 CAS.
E1 PRI ITU-T Q.955.3	No[6]	5.3.2.12.10	Support minimum threshold CRs/FRs (1, 2, 3, 4, 5, 6, 7, 8, 9, 10, 11, 12, 13, 14, 15, 16, 17, 18, 19) and meet interface criteria for EI PRI (ITU-T Q.955.3).
E1 PRI ITU-T Q.931	No[6]	5.3.2.12.10	Support minimum threshold CRs/FRs (1, 2, 3, 4, 5, 6, 7, 8, 9, 10, 11, 12, 13, 14, 15, 16, 17, 18, 19) and meet interface criteria for E1 PRI (ITU-T Q.931).
SONET	No	5.3.2.8.4	Support minimum threshold CRs/FRs (1, 2, 3, 4, 5, 6, 7, 8, 9, 10, 11, 12, 13, 14, 15, 16, 17, 18, 19) and meet interface criteria for SONET.
NM Interfaces[7]			
10Base-X	No[8]	5.3.2.4.4 5.3.2.7.2.8	Support minimum threshold CR/FRs (20, 21) and meet interface criteria for IEEE 802.3i and IEEE 802.3j.
100Base-X	No[8]	5.3.2.4.4 5.3.2.7.2.8	Support minimum threshold CR/FRs (20, 21) and meet interface criteria for IEEE 802.3u.
1000Base-X	No[8]	5.3.2.4.2	Support minimum threshold CR/FRs (20, 21) and meet interface criteria for IEEE 802.3z.

NOTES:
1. The SUT high-level CR and FR ID numbers depicted in the Threshold CRs/FRs column can be cross-referenced in Table 2-2. These high-level CR/FR requirements refer to a detailed list of requirements provided in Enclosure 3.
2. The line interface requirements and statuses apply to the integrated LSC. Line interfaces are not required for a WAN SS.
3. The external interface requirements and statuses apply the both the WAN SS and integrated LSC with the exception of the SONET OC-3 interface. This is only supported on the WAN SS.
4. Provides legacy DSN and TELEPORT connectivity.
5. Provides PSTN connectivity.
6. E1 requirements for OCONUS ETSI-compliant countries are conditionally required for deployments in Europe (ITU-T Q.955.3 DSN, ITU-T Q.931 commercial).
7. The NM interface requirements and statuses apply to both the WAN SS and integrated LSC.
8. The SUT must provide a minimum of one of the listed interfaces.

Table 2-1. WAN SS with integrated LSC Interface Requirements (continued)

LEGEND:

10Base-X	10 Mbps Ethernet
100Base-X	100 Mbps Ethernet
1000Base-X	1000 Mbps Ethernet
802.3i	10 Mbps twisted pair media for 10Base-X networks
802.3j	10 Mbps fiber media for 10Base-X networks
802.3u	100BASE-TX, 100BASE-T4, 100BASE-FX Fast Ethernet at 100 Mbps with auto negotiation
802.3z	Gigabit Ethernet Standard
ANSI	American National Standards Institute
BRI	Basic Rate Interface
CAS	Channel Associated Signaling
CCS7	Common Channel Signaling 7
CR	Capability Requirement
DSN	Defense Switched Network
DSS1	Digital Subscriber Signaling 1
E1	European Basic Multiplex Rate (2.048 Mbps)
ETSI	European Telecommunications Standards Institute
FR	Functional Requirement
ID	Identification
IEEE	Institute of Electrical and Electronics Engineers
ISDN	Integrated Services Digital Network
ITU-T	International Telecommunication Union – Telecommunication Standardization Sector
LSC	Local Session Controller
Mbps	Megabits per second
MLPP	Multi-Level Precedence and Preemption
NI2	National ISDN Standard 2
NM	Network Management
OCONUS	Outside the Continental United States
PRI	Primary Rate Interface
PSTN	Public Switched Telephone Network
Q.931	Signaling Standard for ISDN
Q.955.3	ISDN Signaling standard for E1 MLPP
SONET	Synchronous Optical Network
SS	Softswitch
SS7	Signaling System 7
T1	Digital Transmission Link Level 1 (1.544 Mbps)
T1.607	ISDN – Layer 3 Signaling Specification for Circuit Switched Bearer Service for DSS1
T1.619a	SS7 and ISDN MLPP Signaling Standard for T1
UCR	Unified Capabilities Requirements
WAN	Wide Area Network

7.2 Capability Requirements (CR) and Functional Requirements (FR). The WAN SSs and LSCs have required and conditional features and capabilities that are established by Sections 5.3.2, 5.3.4, and 5.3.5 of the UCR. The SUT does not need to provide non-critical (conditional) requirements. If they are provided, they must function according to the specified requirements. The SUTs features and capabilities and its aggregated requirements are listed in Table 2-2. Detailed CR/FR requirements are provided in Table 3-1 of Enclosure 3.

Table 2-2. WAN SS/LSC Capability Requirements and Functional Requirements

CR/FR ID	Capability/Function	Applicability[1]	UCR Reference
1	**Assured Services Product Features and Capabilities**		
	DSCP Packet Marking	Required[2]	5.3.2.2.1.4
	Voice Features and Capabilities	Required	5.3.2.2.2.1
	Public Safety Features	Required	5.3.2.2.2.2
	ASAC – Open Loop	Required[2]	5.3.2.2.2.3
	Signaling Protocols	Required[2]	5.3.2.2.3
	Signaling Performance	Conditional[2]	5.3.2.2.4
2	**Registration, Authentication, and Failover**		
	Registration	Required	5.3.2.3.1
	Failover	Required	5.3.2.3.2
3	**Product Physical, Quality, and Environmental Factors**		
	Availability	Required	5.3.2.5.2.1
	Maximum Downtimes	Required	5.3.2.5.2.2
	Loss of Packets	Required[2]	5.3.2.5.4

Table 2-2. WAN SS/LSC Capability Requirements and Functional Requirements (continued)

CR/FR ID	Capability/Function	Applicability[1]	UCR Reference
4	**Voice End Instruments**		
	Tones and Announcements	Required	5.3.2.6.1.1
	Audio Codecs	Required[2]	5.3.2.6.1.2
	VoIP PEI or AEI Audio Performance Requirements	Required[2]	5.3.2.6.1.3
	VoIP Sampling Standard	Required[2]	5.3.2.6.1.4
	Authentication To LSC	Required[2]	5.3.2.6.1.5
	Analog Telephone Support	Required[2]	5.3.2.6.1.6
	Softphones	Conditional[2]	5.3.2.6.1.7
	ISDN BRI	Conditional[2]	5.3.2.6.1.8
5	**Video End Instruments**		
	Video End Instrument	Required[2]	5.3.2.6.2
	Display Messages, Tones, and Announcements	Required[2]	5.3.2.6.2.1
	Video Codecs (Including Associated Audio Codecs)	Required[2]	5.3.2.6.2.2
6	**LSC Requirements**		
	PBAS/ASAC Requirements	Required[2]	5.3.2.7.2.1
	Calling Number Delivery Requirements	Required[2]	5.3.2.7.2.2
	LSC Signaling Requirements	Required[2]	5.3.2.7.2.3
	Service Requirements under Total Loss of WAN Transport	Required[2]	5.3.2.7.2.4
	Local Location Server and Directory	Required[2]	5.3.2.7.2.5
	LSC Transport Interface Functions	Required[2]	5.3.2.7.2.7
	LSC to IP PEI, AEI, and Operator Console Status Verification	Required[2]	5.3.2.7.2.10
	Line-Side Custom Features Interference	Conditional[2]	5.3.2.7.2.11
	Loop Avoidance	Required[2]	5.3.2.7.3
7	**Policing Requirements**		
	Policing Requirements when Serving an AS-SIP – ITU-T H.323 Gateway	Required[3]	5.3.2.7.5.1.5
8	**Global Location Server**		
	Global Location Server Requirements	Required[3]	5.3.2.8.2.2
9	**Call Connection Agent Requirements**		
	CCA IWF Component	Required[4]	5.3.2.9.2.1
	CCA MGC Component	Required[4]	5.3.2.9.2.2
	SG Component	Conditional	5.3.2.9.2.3
	CCA-IWF Support for AS-SIP	Required	5.3.2.9.5.1
	CCA-IWF Support for SS7	Conditional	5.3.2.9.5.2
	CCA-IWF Support for PRI via MG	Required	5.3.2.9.5.3
	CCA-IWF Support for CAS Trunks via MG	Conditional	5.3.2.9.5.4
	CCA-IWF Support for PEI and AEI Signaling Protocols	Required[2]	5.3.2.9.5.5
	CCA-IWF Support for VoIP and TDM Protocol Interworking	Required[4]	5.3.2.9.5.6
	CCA Preservation of Call Ringing State during Failure Conditions	Required	5.3.2.9.6
	CCA Interactions with Transport Interface Functions	Required[2]	5.3.2.10.3
	CCA Interactions with the EBC	Required[2]	5.3.2.10.4
	CCA Support for Admission Control	Required	5.3.2.10.5
	CCA Support for UFS	Required[2]	5.3.2.10.6
	CCA Support for IA	Required	5.3.2.10.7
	CCA Interaction with VoIP EIs	Required[2]	5.3.2.10.10
	CCA Support for AS Voice and Video	Required[2]	5.3.2.10.11
	CCA Interactions with Service control Functions	Required[2]	5.3.2.10.12
	CCA Interworking between AS-SIP and SS7	Conditional[2]	5.3.2.11

Table 2-2. WAN SS/LSC Capability Requirements and Functional Requirements (continued)

CR/FR ID	Capability/Function	Applicability[1]	UCR Reference
10	**MG Requirements**		
	Role of MG In LSC	Required[2]	5.3.2.12.3.1
	MG Support for ASAC	Required	5.3.2.12.4.1
	MG and IA Functions	Required	5.3.2.12.4.2
	MG Interaction with Service Control Function	Required[2]	5.3.2.12.4.3
	MG Interactions with IP Transport Interface Functions	Required[2]	5.3.2.12.4.4
	MG-EBC interactions	Required[2]	5.3.2.12.4.5
	MG IP-Based PSTN Interface Requirements	Conditional	5.3.2.12.4.7
	MG Interaction with VoIP EIs	Required[2]	5.3.2.12.4.8
	MG support for User Features and Services	Required[2]	5.3.2.12.4.9
	MG Interface to TDM	Required[5]	5.3.2.12.5
	MG Interface to TDM Allied and Coalition	Conditional	5.3.2.12.6
	MG Interface to TDM PSTN in US	Required[5]	5.3.2.12.7
	MG Interfaces to TDM PSTN OCONUS	Required	5.3.2.12.8
	MG Support for CCS7	Conditional[5, 6]	5.3.2.12.9
	MG Support for ISDN PRI Trunks	Required	5.3.2.12.10
	MG Support for CAS Trunks	Conditional[5]	5.3.2.12.11
	MG requirements for VoIP Internal Interfaces	Required[2]	5.3.2.12.12
	MG Echo Cancellation	Required	5.3.2.12.13
	MG Clock Timing	Required	5.3.2.12.14
	MGC-MG CCA Functions	Required	5.3.2.12.15
	MG ITU-T V.150.1	Required	5.3.2.12.16
	MG Preservation of Call Ringing during Failure	Required	5.3.2.12.17
11	**SG Requirements**		
	SG and CCS7 network Interactions	Conditional	5.3.2.13.5.1
	SG Interactions with CCA	Conditional	5.3.2.13.5.2
	SG Interworking Functions	Conditional	5.3.2.13.5.3
12	**WWNDP Requirements**		
	WWNDP	Required	5.3.2.16
	DSN WWNDP	Required	5.3.2.16.1
13	**Commercial Cost Avoidance**		
	Commercial Cost Avoidance	Required	5.3.2.23
14	**AS-SIP Based for External Devices (Voicemail, Unified Messaging, and Automated Receiving Devices)**		
	AS-SIP Requirements for External Interfaces	Conditional[2]	5.3.2.24
15	**Precedence Call Diversion**		
	Precedence Call Diversion	Required	5.3.2.25
16	**Attendant Station Features**		
	Precedence and Preemption	Required[2]	5.3.2.26.1
	Call Display	Required[2]	5.3.2.26.2
	Class of Service Override	Required[2]	5.3.2.26.3
	Busy Override and Busy Verification	Required[2]	5.3.2.26.4
	Night service	Required[2]	5.3.2.26.5
	Automatic Recall of Attendant	Required[2]	5.3.2.26.6
	Calls in Queue to the Attendant	Required[2]	5.3.2.26.7

Table 2-2. WAN SS/LSC Capability Requirements and Functional Requirements (continued)

CR/FR ID	Capability/Function	Applicability[1]	UCR Reference
17	**RTS Routing Database Requirements**		
	WAN SS to LRDB Interface: DB Queries for HR	Required[3]	5.3.2.28.2
	HR Query from WAN SS	Required[3]	5.3.2.28.2.1
	WAN SS Actions Based on DB Response	Required[3]	5.3.2.28.2.4
	LSC to LRDB Interface: DB Queries for CCA	Required[2]	5.3.2.28.3
	CCA Query from LSC	Required[2]	5.3.2.28.3.1
	DB Response When Commercial Number is Not Found	Required[2]	5.3.2.28.3.3
	LSC to MRDB Interface: DB Updates for CCA and HR	Required[2]	5.3.2.28.4
	LDAP Update Operations	Required[2]	5.3.2.28.4.1
	RTS Routing DB "Opt Out" for LSC End Users	Required[2]	5.3.2.28.4.2
	Request Processing	Required[2]	5.3.2.28.5.2.3
	Client Time-Out	Required	5.3.2.28.5.2.3.1
	Data Caching	Required	5.3.2.28.5.2.4.2
	Failover Procedures	Required	5.3.2.28.5.2.5
	MRDB Failover	Required[2]	5.3.2.28.5.2.5.1
	LRDB Failover	Required	5.3.2.28.5.2.5.2
	Alarms	Required	5.3.2.28.6.3
	Logs	Required	5.3.2.28.6.4
	Performance Monitoring	Conditional	5.3.2.28.6.7
	HR Requirements for Preventing PRI "Hairpin" Routes	Required	5.3.2.28.8
	SS Requirements for TBCT	Required	5.3.2.28.8.1
	SS Requirements for DSN HR	Required	5.3.2.28.8.2
	SS HR Call Flow using DSN HR	Required	5.3.2.28.8.2.3
18	**AS-SIP Requirements**		
	SIP Requirements for AS-SIP Signaling Appliances and AS-SIP EIs	Required[2]	5.3.4.7
	SIP Session Keep-Alive Timer	Required	5.3.4.8
	Session Description Protocol	Required	5.3.4.9
	Precedence and Preemption	Required	5.3.4.10
	Policing of Call Count Thresholds	Required[3]	5.3.4.11
	Video Telephony – General Rules	Required	5.3.4.12
	Calling Services	Required	5.3.4.13
	SIP Translation Requirements for Inter-working AS-SIP Signaling Appliances	Required	5.3.4.14
	Relevant Timers for the Terminating Gateway and the Originating Gateway	Required	5.3.4.15
	SIP Requirements for Interworking AS-SIP Signaling Appliances	Required	5.3.4.16
	Keep-Alive Timer Requirements for Interworking AS-SIP Signaling Appliances	Required	5.3.4.17
	Precedence and Preemption Extensions for Interworking AS-SIP Signaling Appliances	Required	5.3.4.18
	Supplementary Services	Required	5.3.4.19
19	**IPv6 Requirements**		
	Product Requirements	Required	5.3.5.4
20	**NM**		
	LSC Management Function	Required[2]	5.3.2.7.2.6
	VVoIP NMS Interface Requirements	Required	5.3.2.4.4
	General Management requirements	Required	5.3.2.17.2
	Requirement for FCAPS Management	Required	5.3.2.17.3
	NM requirements of Appliance Functions	Required	5.3.2.18
	Accounting Management	Required	5.3.2.19
21	**Information Assurance**		
	Information Assurance Requirements	Required	5.4

Table 2-2. WAN SS/LSC Capability Requirements and Functional Requirements (continued)

NOTES:
1. The annotation of 'required' refers to a high-level requirement category. The applicability of each sub-requirement is provided in Enclosure 3, which includes the detailed requirements and associated criteria.
2. This requirement applies specifically to the integrated LSC and not to the WAN SS.
3. This requirement applies specifically to the WAN SS and not to the integrated LSC.
4. The LSC must meet T1 PRI (ANSI T1.619a and NI-2) CCA IWF. The T1 CAS and T1 CCS7 CCA IWF requirements are conditional.
5. The LSC must meet TDM requirements for T1 PRI (ANSI T1.619a and NI-2). The TDM requirements for T1 CAS and T1 CCS7 are conditional.
6. The E1 requirements are for OCONUS ETSI-compliant countries and are conditionally required for deployments in Europe.

LEGEND:

AEI	AS-SIP End Instrument
AS	Assured Services
ASAC	Assured Services Admission Control
AS-SIP	Assured Services Session Initiation Protocol
BRI	Basic Rate Interface
CAS	Channel Associated Signaling
CCA	Call Connection Agent
CCS7	Common Channel Signaling Number 7
CR	Capability Requirement
DB	database
DSCP	Differentiated Services Code Point
DSN	Defense Switched Network
EBC	Edge Boundary Controller
EI	End Instrument
FCAPS	Fault, Configuration, Accounting, Performance and Security
FR	Functional Requirement
H.323	Standard for multi-media communications on packet-based networks
HR	Hybrid Routing
IA	Information Assurance
ID	Identification
IP	Internet Protocol
IPv6	Internet Protocol version 6
ISDN	Integrated Services Digital Network
ITU-T	International Telecommunication Union - Telecommunication Standardization Sector
IWF	Interworking Function
LDAP	Lightweight Directory Access Protocol
LRDB	Local Routing Database
LSC	Local Session Controller
MG	Media Gateway
MGC	Media Gateway Controller
MRDB	Master Routing Database
NM	Network Management
NMS	Network Management System
OCONUS	Outside the Continental United States
PBAS	Precedence Based Assured Services
PEI	Proprietary End Instrument
PRI	Primary Rate Interface
PSTN	Public Switched Telephone Network
RTS	Real Time Services
SG	Signaling Gateway
SIP	Session Initiation Protocol
SS7	Signaling System 7
SUT	System Under Test
TBCT	Two B-channel Transfer
TDM	Time Division Multiplexing
UCR	Unified Capabilities Requirements
UFS	User Features and Services
U.S.	United States
V.150	Modem over Internet Protocol Networks
VoIP	Voice over Internet Protocol
VVoIP	Voice and Video over Internet Protocol
WAN	Wide Area Network
WWNDP	Worldwide Numbering and Dialing Plan

7.3 Information Assurance. Table 2-3 details the Information Assurance (IA) requirements applicable to a WAN SS and LSC. The LSCs IA requirements are established by Section 5.4 of the UCR.

Table 2-3. WAN SS/LSC Information Assurance Requirements

Requirement	Applicability (See note.)	UCR Reference	Criteria
General Requirements	Required	5.4.6.2	Detailed requirements and associated criteria for Wide Area Network Softswitches and Local Session Controllers are listed in Reference (f).
Authentication	Required	5.4.6.2.1	
Integrity	Required	5.4.6.2.2	
Confidentiality	Required	5.4.6.2.3	
Non-Repudiation	Required	5.4.6.2.4	
Availability	Required	5.4.6.2.5	

NOTE: The annotation of 'required' refers to a high-level requirement category. The applicability of each sub-requirement is provided in Reference (f).

LEGEND:
LSC Local Session Controller
UCR Unified Capabilities Requirements
WAN SS Wide Area Network Softswitch

7.4 Other. None.

8. TEST NETWORK DESCRIPTION. The SUT was tested at Joint Interoperability Test Command (JITC), Fort Huachuca, Arizona in a manner and configuration similar to that of an operational environment. Testing the system's required functions and features was conducted using the test configurations depicted in Figures 2-3 and 2-4. Figure 2-3 depicts the minimum test architecture for testing LSCs. Figure 2-4 depicts the SUT's test configuration.

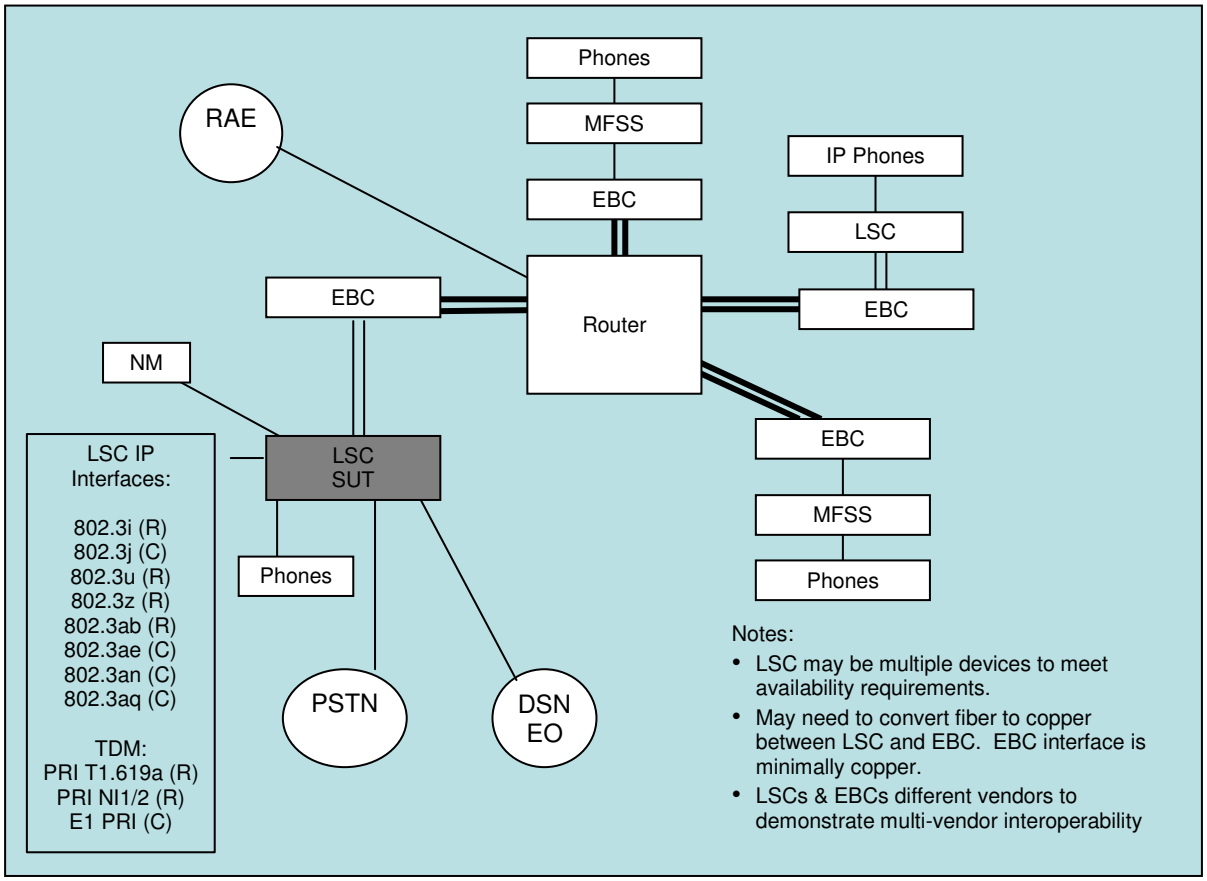

LEGEND:

C	Conditional	NI 1/2	National ISDN Standard 1 or 2
DSN	Defense Switched Network	NM	Network Management
EBC	Edge Boundary Controller	PRI	Primary Rate Interface
E1	European Basic Multiplex Rate (2.048 Mbps)	PSTN	Public Switched Telephone Network
EO	End Office	R	Required
IP	Internet Protocol	RAE	Required Ancillary Equipment
ISDN	Integrated Services Digital Network	SS7	Signaling System 7
LSC	Local Session Controller	SUT	System Under Test
Mbps	Megabits per second	T1	Digital Transmission Link Level 1 (1.544 Mbps)
MFSS	Multifunction Softswitch	T1.619a	SS7 and ISDN MLPP Signaling Standard for T1
MLPP	Multi-Level Precedence and Preemption	TDM	Time Division Multiplexing

Figure 2-3. LSC Minimum Test Architecture

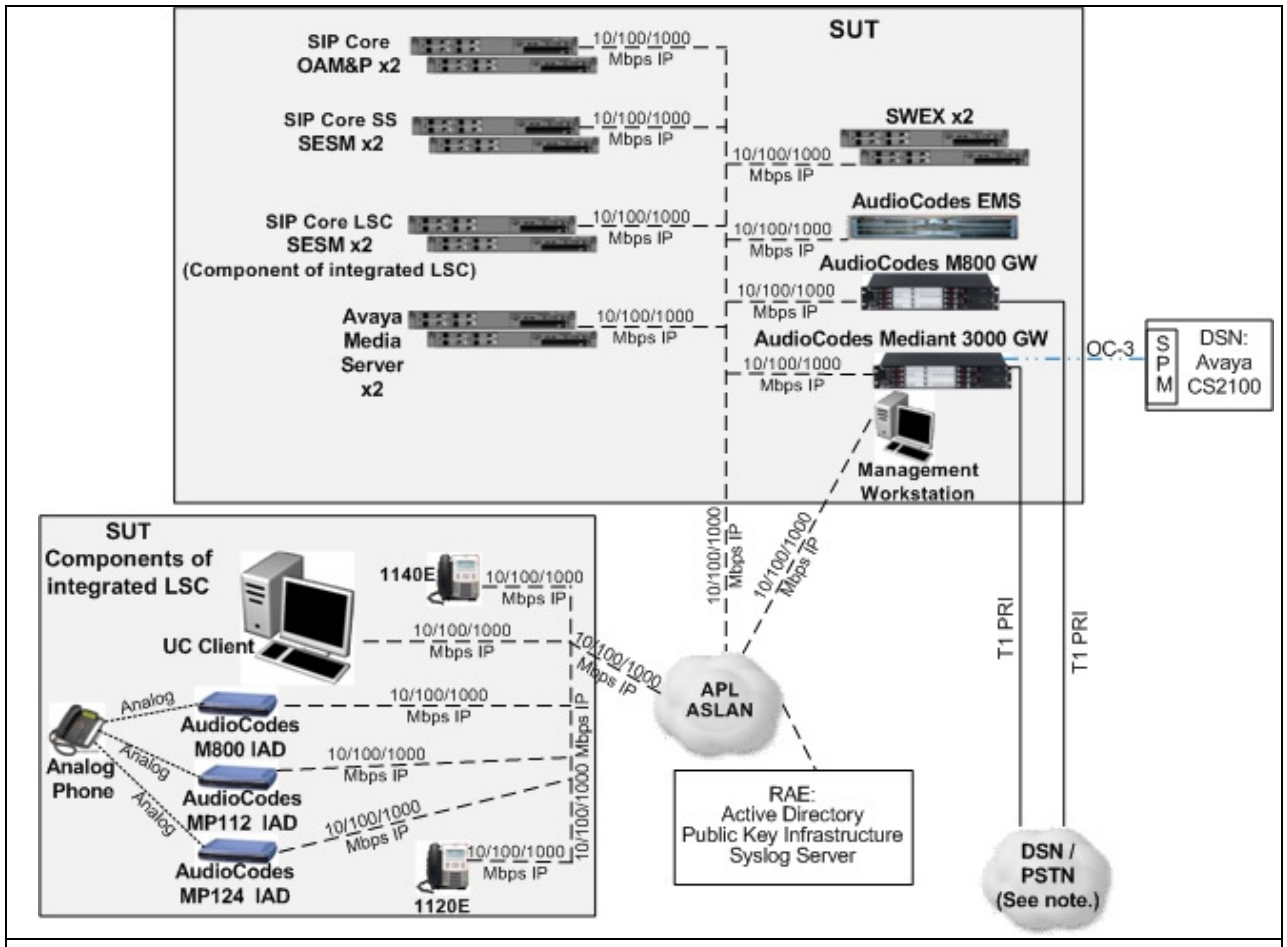

NOTE: The AudioCodes M800 and M3K gateways do not allow a mix of PSTN/DSN trunk gateway configurations. Based on the vendor's POA&M from Release 2.0, the vendor stated this discrepancy would be fixed in AudioCodes version 6.02.054 and would be implemented in the AS 5300 Release 3 by 7 June 2012. However, Release 3 includes AudioCodes version 6.02A.043.001 and not 6.02A.054. DISA has accepted and approved the vendor's POA&M and adjudicated this discrepancy as having a minor operational impact.

LEGEND:

APL	Approved Product List	OC-3	Optical Carrier Level 3
ASLAN	Assured Services Local Area Network	POA&M	Plan of Actions and Milestones
DISA	Defense Information Systems Agency	PSTN	Public Switch Telephone Network
DSN	Defense Switched Network	RAE	Required Ancillary Equipment
EMS	Element Management System	SESM	Subscriber Edge Services Manager
GW	Gateway	SIP	Session Initiation Protocol
IAD	Integrated Access Device	SPM	Spectrum Peripheral Module
IP	Internet Protocol	SS	Softswitch
LSC	Local Session Controller	SUT	System Under Test
Mbps	Megabits per second	UC	Unified Capabilities
OAM&P	Operation, Administration, Maintenance, and Provisioning		

Figure 2-4. SUT Test Configuration

9. SYSTEM CONFIGURATIONS. Table 2-4 provides the system configurations and hardware and software components tested with the SUT. The SUT was tested in an operationally realistic environment to determine its interoperability capability with associated network devices and network traffic.

Table 2-4. SUT Tested System Configuration

System Name	Equipment	
Cisco CUCM LSC	CUCM 8.6	
Avaya Aura® S8800 LSC	Communication Manager 6.0.1 (00.1.510.1 Service Pack 19211)	
Avaya Aura® AS 5300 LSC	Rel. 2.0 Patch Bundle 23	
Redcom HDX LSC	4.0AR3P7	
Required Ancillary Equipment	Active Directory	
	Public Key Infrastructure	
	Syslog Server	
SUT	**Hardware**	**Software/Firmware**
Avaya Aura® AS 5300 Rel. 3.0 (WAN SS with Integrated LSC)	SIP Core OAM&P x2 (HP DL360 or IBM 3550)	Postgresql 9.0.5.8 v2.2.5
		RedHat 5.4 mcp_core_linux_ple2 15.0.21
		MCP_15.1.0.4_2012-04-20-0947
		rsit-server-7.2.1.83-1
	SIP Core SS SESM (HP DL360 or IBM 3550)	RedHat 5.4 mcp_core_linux_ple2 15.0.21
		MCP_15.1.0.4_2012-04-20-0947
		rsit-server-7.2.1.83-1
	SIP Core LSC SESM (component of the integrated LSC) (HP DL360 or IBM 3550)	RedHat 5.4 mcp_core_linux_ple2 15.0.21
		MCP_15.1.0.4_2012-04-20-0947
		rsit-server-7.2.1.83-1
	Avaya Media Server x2 (HP DL360 or IBM 3550)	AMS base 7.5.0.482 AMS apps 7.5.0.33
		RedHat 5.4 mcp_core_linux_ple2 15.0.21
		rsit-server-7.2.1.83-1
		MySQL 5.1.55
	Switch Expert x2 (HP DL360 or IBM 3550)	Switch Expert 7.0 build 361
		Windows Server 2008 R2 SP1
	AudioCodes EMS (Sun Netra T5220)	Solaris 10
		EMS Server 6.2.84
	AudioCodes M3000 GW	Embedded Linux Kernel 2.6.21.7
		6.20A.043.001
	AudioCodes M800 GW	Embedded Linux Kernel 2.6.21.7
		6.20A.043.001
	UC Client (site-provided, STIG-compliant)	Windows 7 SP1
		UC Client Version: 8.1.5094
	AudioCodes M800 IAD (component of the integrated LSC)	Embedded Linux Kernel 2.6.21.7
		6.20A.043.001
	AudioCodes MP112 IAD (component of the integrated LSC)	6.20A.043.001
		pSoS 2.5.4
	AudioCodes MP124 IAD (component of the integrated LSC)	6.20A.043.001
		pSoS 2.5.4
	Management Workstation (site-provided, STIG-compliant)	Windows 7 SP1
		MCP_15.1.0.4_2012-04-20-0947
		Switch Expert 7.0 build 361
		EMS Client 6.2.84
Telephones (components of the integrated LSC)		
Telephone Type	**Model**	**Software/Firmware**
Analog	NA	NA
SIP	1140E	04.02.06.11
SIP	1120E	04.02.06.11

LEGEND:

CUCM	Cisco Unified Communications Manager	OAM&P	Operations, Administration, Maintenance, and Provisioning
EMS	Element Management System		
GW	Gateway	SESM	Session Manager
HDX	High Density Exchange	SIP	Session Initiation Protocol
HP	Hewlett Packard	SS	Softswitch
IAD	Integrated Access Device	STIG	Security Technical Implementation Guides
IBM	International Business Machine	SUT	System Under Test
LSC	Local Session Controller	UC	Unified Capabilities
MCP	Media Communications Processor		

10. TESTING LIMITATIONS. The JITC test team noted the following testing limitations including the impact they may have on interpretation of the results and conclusions. Any untested requirements are also included in the testing limitations.

a. Call Loading. Due to limitations in test equipment JITC could not create a large volume of line and trunk calls to simulate operational traffic loads. This issue will be resolved in the near future to allow for simulated call loads during interoperability certification testing. The use of operational data as the SUT is fielded will validate the SUT's ability to support its proposed number of subscribers.

b. AS-SIP End Instruments (AEI). JITC did limited testing on the SUT with non-proprietary AEIs. Testing with the Teo AEI was unable to be completed due to issues with TLS and therefore the SUT is not certified with non-proprietary AEIs.

c. Proprietary End Instruments (PEI). JITC did not test hard phone PEIs for video requirements. The only devices tested for video on the integrated LSC were PEI Softphones. The video phones were tested intra-enclave and inter-enclave between the SUT LSC and other Avaya Aura® AS 5300 LSCs. There are currently no other LSC vendors that offer a video end instrument and; therefore, multi-vendor interoperability has not been demonstrated nor is the SUT certified as such.

d. Internet Protocol version 6 (IPv6). The IPv6 requirements were tested in the LSC configuration. JITC did not test IPv6 inter-enclave (i.e., between LSCs via an Edge Boundary Controller (EBC) because the EBC did not fully support IPv6 during the time of testing. JITC will verify inter-enclave IPv6 capabilities of the SUT prior to amending the certification to include the capability.

e. Network Management (NM). JITC did not test the SUT's NM capabilities. The vendor did submit an NM LoC that was reviewed by JITC.

f. Attendant Consoles. JITC did not test the SUT's Attendant features. The vendor did not provide an Attendant Console.

11. INTEROPERABILITY EVALUATION RESULTS. The SUT meets the critical interoperability requirements for a WAN SS with integrated LSC in accordance with the UCR and is certified for joint use with other UC Products listed on the APL. Additional discussion regarding specific testing results is located in subsequent paragraphs.

11.1 Interfaces. The SUT met the external interface requirements for 10/100/1000Base-X (AS-SIP line and trunk) and 10/100/1000Base-X for NM. The SUT also met the interface requirements for SONET OC-3 and T1 ISDN PRI for both ANSI T1.619a (Assured Services) and PSTN only with National ISDN-2 (NI-2). Although the SUT supports E1 interfaces, they were not tested and are not covered under this certification. The SUT is certified for use in the U.S., including CONUS, Alaska, Hawaii, and U.S. Caribbean and Pacific Territories. The SUT is not certified for joint use outside CONUS in ETSI-compliant countries. The interface status of the SUT is provided in Table 2-5.

Table 2-5. SUT Interface Requirements Status

Interface	Critical	UCR Reference	Threshold CR/FR Requirements[1]	Status	Remarks
Line Interfaces[2]					
10Base-X	Yes	5.3.2.6.3	1, 2, 3, 4, 5, 6, 8, 9, 10, 11, 12, 15, 18, 20, 21	Certified	Met threshold CRs/FRs for IEEE 802.3i and 802.3j with the SUT PEIs.
100Base-X	Yes	5.3.2.6.3	1, 2, 3, 4, 5, 6, 8, 9, 10, 11, 12, 15, 18, 20, 21	Certified	Met threshold CRs/FRs for IEEE 802.3u with the SUT PEIs.
1000Base-X	No	5.3.2.6.3	1, 2, 3, 4, 5, 6, 8, 9, 10, 11, 12, 15, 18, 20, 21	Certified	Met threshold CRs/FRs for IEEE 802.3z with the SUT PEIs.
2-wire analog	Yes	5.3.2.6.1.6	1, 2, 3, 4, 5, 6, 8, 9, 10, 11, 12, 15, 18, 20, 21	Certified	Met threshold CRs/FRs for 2-wire analog interfaces with the SUT IAD.
ISDN BRI	No	5.3.2.6.1.8	1, 2, 3, 4, 5, 6, 8, 9, 10, 11, 12, 15, 18, 20, 21	Not Tested	This interface is not supported by the SUT and is not required for an LSC.
External Interfaces[3]					
10Base-X	Yes	5.3.2.4.2	1, 2, 3, 4, 5, 6, 7, 8, 9, 10, 11, 12, 13, 14, 15, 16, 17, 18, 19	Certified	Met threshold CRs/FRs for IEEE 802.3i and 802.3j for the AS-SIP trunk.
100Base-X	Yes	5.3.2.4.2	1, 2, 3, 4, 5, 6, 7, 8, 9, 10, 11, 12, 13, 14, 15, 16, 17, 18, 19	Certified	Met threshold CRs/FRs for IEEE 802.3u for the AS-SIP trunk.
1000Base-X	Yes	5.3.2.4.2	1, 2, 3, 4, 5, 6, 7, 8, 9, 10, 11, 12, 13, 14, 15, 16, 17, 18, 19	Certified	Met threshold CRs/FRs for IEEE 802.3ab and 802.3z for the AS-SIP trunk.
ISDN T1 PRI ANSI T1.619a	Yes	5.3.2.4.3	1, 2, 3, 4, 5, 6, 7, 8, 9, 10, 11, 12, 13, 14, 15, 16, 17, 18, 19	Certified	Met threshold CRs/FRs. This interface provides legacy DSN and TELEPORT connectivity.
ISDN T1 PRI NI-2	Yes	5.3.2.4.3	1, 2, 3, 4, 5, 6, 7, 8, 9, 10, 11, 12, 13, 14, 15, 16, 17, 18, 19	Certified	Met threshold CRs/FRs. This interface provides PSTN connectivity.
T1 CCS7 ANSI T1.619a	No	5.3.2.12.9	1, 2, 3, 4, 5, 6, 7, 8, 9, 10, 11, 12, 13, 14, 15, 16, 17, 18, 19	Not Tested	Although this interface is offered by the SUT, it was not tested. This interface is not certified by JITC and is not required for a WAN SS or LSC.
T1 CAS	No	5.3.2.12.11	1, 2, 3, 4, 5, 6, 7, 8, 9, 10, 11, 12, 13, 14, 15, 16, 17, 18, 19	Not Tested	This interface is not offered by the SUT and it is not required for a WAN SS or LSC.

Table 2-5. SUT Interface Requirements Status (continued)

Interface	Critical	UCR Reference	Threshold CR/FR Requirements[1]	Status	Remarks
External Interfaces (continued)[3]					
E1 PRI ITU-T Q.955.3	No[4]	5.3.2.12.10	1, 2, 3, 4, 5, 6, 7, 8, 9, 10, 11, 12, 13, 14, 15, 16, 17, 18, 19	Not Tested	Although this interface is offered by the SUT, it was not tested. This interface is not certified by JITC and is not required for a WAN SS or LSC.
E1 PRI ITU-T Q.931	No[4]	5.3.2.12.10	1, 2, 3, 4, 5, 6, 7, 8, 9, 10, 11, 12, 13, 14, 15, 16, 17, 18, 19	Not Tested	Although this interface is offered by the SUT, it was not tested. This interface is not certified by JITC and is not required for a WAN SS or LSC.
SONET OC-3	No	5.3.2.8.4	1, 2, 3, 4, 5, 6, 7, 8, 9, 10, 11, 12, 13, 14, 15, 16, 17, 18, 19	Certified[5]	Met threshold CRs/FRs for this interface via connection through the Avaya CS2100 SPM.
NM Interfaces[6]					
10Base-X	No[7]	5.3.2.4.4 5.3.2.7.2.8	20, 21	Certified	Met threshold CRs/FRs. Verified via LoC.
100Base-X	No[7]	5.3.2.4.4 5.3.2.7.2.8	20, 21	Certified	Met threshold CRs/FRs. Verified via LoC.
1000Base-X	No[7]	5.3.2.4.4 5.3.2.7.2.8	20, 21	Certified	Met threshold CRs/FRs. Verified via LoC.

NOTES:
1. The SUT high-level CR and FR ID numbers depicted in the Threshold CRs/FRs column can be cross-referenced in Table 2-6. These high-level CR/FR requirements refer to a detailed list of requirements provided in Enclosure 3.
2. The line interface requirements and statuses apply to the integrated LSC. Line interfaces are not required for a WAN SS.
3. The external interface requirements and statuses apply the both the WAN SS and integrated LSC with the exception of the SONET OC-3 interface. This is only supported on the WAN SS.
4. This interface is conditionally required for deployment in Europe.
5. The SUT was tested with an OC-3 interface from the AudioCodes Mediant 3000 to the Avaya CS2100 SPM. Neither the Avaya CS2100 or its internal SPM component is part of the SUT.
6. The NM interface requirements and statuses apply to both the WAN SS and integrated LSC.
7. The SUT must provide a minimum of one of the listed interfaces.

LEGEND:

10Base-X	10 Mbps Ethernet
100Base-X	100 Mbps Ethernet
1000Base-X	1000 Mbps Ethernet
802.3ab	Gigabit Ethernet Standard over twisted pair
802.3i	10 Mbps twisted pair media for 10Base-X networks
802.3j	10 Mbps fiber media for 10Base-X networks
802.3u	100BASE-TX, 100BASE-T4, 100BASE-FX Fast Ethernet at 100 Mbps with auto negotiation
802.3z	Gigabit Ethernet Standard
ANSI	American National Standards Institute
AS-SIP	Assured Services Session Initiation Protocol
BRI	Basic Rate Interface
CAS	Channel Associated Signaling
CCS7	Common Channel Signaling Number 7
CR	Capability Requirement
CS	Communication Server
DSN	Defense Switched Network
E1	European Basic Multiplex Rate (2.048 Mbps)
FR	Functional Requirement
IAD	Integrated Access Device
ID	Identification
IEEE	Institute of Electrical and Electronics Engineers
ISDN	Integrated Services Digital Network
ITU-T	International Telecommunication Union - Telecommunication Standardization Sector
JITC	Joint Interoperability Test Command
LoC	Letter of Compliance
LSC	Local Session Controller
Mbps	Megabits per second
MLPP	Multi-Level Precedence and Preemption
NI-2	National ISDN Standard 2
NM	Network Management
OC-3	Optical Carrier Level 3 (155 Mbps)
PEI	Proprietary End Instrument
PRI	Primary Rate Interface
PSTN	Public Switched Telephone Network
Q.931	Signaling Standard for ISDN
Q.955.3	ISDN Signaling Standard for E1 MLPP
SONET	Synchronous Optical Network
SPM	Spectrum Peripheral Module
SS	Softswitch
SS7	Signaling System 7
SUT	System Under Test
T1	Digital Transmission Link Level 1 (1.544 Mbps)
T1.619a	SS7 and ISDN MLPP Signaling Standard for T1
UCR	Unified Capabilities Requirements
WAN	Wide Area Network

11.2 Capability Requirements (CR) and Functional Requirements (FR). The SUT CR and FR status is depicted in Table 2-6. Detailed CR/FR requirements are provided in Enclosure 3, Table 3-1. A summary of the SUT's ability to meet UCR requirements is provided in the sub-paragraphs below. All requirements and associated references were derived from UCR 2008, Change 3. Discrepancies discussed below were adjudicated to be minor based on vendor submission and compliance to a POA&M.

Table 2-6. SUT Capability Requirements and Functional Requirements Status

CR/FR ID	Capability/Function	Applicability[1]	UCR Reference	Status
1	**Assured Services Product Features and Capabilities**			
	DSCP Packet Marking	Required[2]	5.3.2.2.1.4	Partially Met[3]
	Voice Features and Capabilities	Required	5.3.2.2.2.1	Partially Met[4, 5]
	Public Safety Features	Required	5.3.2.2.2.2	Partially Met[6]
	ASAC – Open Loop	Required[2]	5.3.2.2.2.3	Met
	Signaling Protocols	Required[2]	5.3.2.2.3	Partially Met[7]
	Signaling Performance	Conditional[2]	5.3.2.2.4	Met
2	**Registration, Authentication, and Failover**			
	Registration	Required	5.3.2.3.1	Met
	Failover	Required	5.3.2.3.2	Not Met[8, 9]
3	**Product Physical, Quality, and Environmental Factors**			
	Availability	Required	5.3.2.5.2.1	Met
	Maximum Downtimes	Required	5.3.2.5.2.2	Met
	Loss of Packets	Required[2]	5.3.2.5.4	Met
4	**Voice End Instruments**			
	Tones and Announcements	Required	5.3.2.6.1.1	Partially Met[10]
	Audio Codecs	Required[2]	5.3.2.6.1.2	Partially Met[11]
	VoIP PEI or AEI Audio Performance Requirements	Required[2]	5.3.2.6.1.3	Partially Met[7, 12]
	VoIP Sampling Standard	Required[2]	5.3.2.6.1.4	Met
	Authentication to LSC	Required[2]	5.3.2.6.1.5	Met
	Analog Telephone Support	Required[2]	5.3.2.6.1.6	Partially Met[13, 14]
	Softphones	Conditional[2]	5.3.2.6.1.7	Partially Met[3]
	ISDN BRI	Conditional[2]	5.3.2.6.1.8	Not Tested[15]
5	**Video End Instruments**			
	Video End Instrument	Required[2]	5.3.2.6.2	Partially Met[16, 3]
	Display Messages, Tones, and Announcements	Required[2]	5.3.2.6.2.1	Partially Met[16, 3]
	Video Codecs (Including Associated Audio Codecs)	Required[2]	5.3.2.6.2.2	Partially Met[16, 3]
6	**LSC Requirements**			
	PBAS/ASAC Requirements	Required[2]	5.3.2.7.2.1	Met
	Calling Number Delivery Requirements	Required[2]	5.3.2.7.2.2	Met
	LSC Signaling Requirements	Required[2]	5.3.2.7.2.3	Met
	Service Requirements under Total Loss of WAN Transport	Required[2]	5.3.2.7.2.4	Met
	Local Location Server and Directory	Required[2]	5.3.2.7.2.5	Met
	LSC Transport Interface Functions	Required[2]	5.3.2.7.2.7	Met
	LSC to IP PEI, AEI, and Operator Console Status Verification	Required[2]	5.3.2.7.2.10	Not Met[7, 17]
	Line-Side Custom Features Interference	Conditional[2]	5.3.2.7.2.11	Met
	Loop Avoidance	Required[2]	5.3.2.7.3	Not Met[18]
7	**Policing Requirements**			
	Policing Requirements when Serving an AS-SIP – ITU-T H.323 Gateway	Required[19]	5.3.2.7.5.1.5	Not Tested[20]
8	**Global Location Server**			
	Global Location Server Requirements	Required[19]	5.3.2.8.2.2	Met

Table 2-6. SUT Capability Requirements and Functional Requirements Status (continued)

CR/FR ID	Capability/Function	Applicability[1]	UCR Reference	Status
9	**Call Connection Agent Requirements**			
	CCA IWF Component	Required	5.3.2.9.2.1	Met
	CCA MGC Component	Required	5.3.2.9.2.2	Met
	SG Component	Conditional	5.3.2.9.2.3	Not Tested[15]
	CCA-IWF Support for AS-SIP	Required	5.3.2.9.5.1	Met
	CCA-IWF Support for SS7	Conditional	5.3.2.9.5.2	Not Tested[15]
	CCA-IWF Support for PRI via MG	Required	5.3.2.9.5.3	Met
	CCA-IWF Support for CAS Trunks via MG	Conditional	5.3.2.9.5.4	Not Tested[15]
	CCA-IWF Support for PEI and AEI Signaling Protocols	Required[2]	5.3.2.9.5.5	Partially Met[7, 16, 17]
	CCA-IWF Support for VoIP and TDM Protocol Interworking	Required	5.3.2.9.5.6	Met
	CCA Preservation of Call Ringing State during Failure Conditions	Required	5.3.2.9.6	Not Met[21]
	CCA Interactions with Transport Interface Functions	Required[2]	5.3.2.10.3	Met
	CCA Interactions with the EBC	Required[2]	5.3.2.10.4	Met
	CCA Support for Admission Control	Required	5.3.2.10.5	Met
	CCA Support for UFS	Required[2]	5.3.2.10.6	Met
	CCA Support for IA	Required	5.3.2.10.7	Met
	CCA Interaction with VoIP EIs	Required[2]	5.3.2.10.10	Partially Met[7, 16, 17]
	CCA Support for AS Voice and Video	Required[2]	5.3.2.10.11	Met[7, 12, 16]
	CCA Interactions with Service Control Functions	Required[2]	5.3.2.10.12	Met
	CCA Interworking between AS-SIP and SS7	Conditional[2]	5.3.2.11	Not Tested[15]
10	**MG Requirements**			
	Role of MG In LSC	Required[2]	5.3.2.12.3.1	Partially Met[22]
	MG Support for ASAC	Required	5.3.2.12.4.1	Met
	MG and IA Functions	Required	5.3.2.12.4.2	Met
	MG Interaction with Service Control Function	Required[2]	5.3.2.12.4.3	Met
	MG Interactions with IP Transport Interface Functions	Required[2]	5.3.2.12.4.4	Met
	MG-EBC interactions	Required[2]	5.3.2.12.4.5	Met
	MG IP-Based PSTN Interface Requirements	Conditional	5.3.2.12.4.7	Not Tested[15]
	MG Interaction with VoIP EIs	Required[2]	5.3.2.12.4.8	Partially Met[7]
	MG support for User Features and Services	Required[2]	5.3.2.12.4.9	Met
	MG Interface to TDM	Required[3]	5.3.2.12.5	Met
	MG Interface to TDM Allied and Coalition	Conditional	5.3.2.12.6	Not Tested[23]
	MG Interface to TDM PSTN in U.S.	Required[3]	5.3.2.12.7	Met
	MG Interfaces to TDM PSTN OCONUS	Required	5.3.2.12.8	Not Tested[23]
	MG Support for CCS7	Conditional[3, 4]	5.3.2.12.9	Not Tested[15]
	MG Support for ISDN PRI Trunks	Required	5.3.2.12.10	Met
	MG Support for CAS Trunks	Conditional[3]	5.3.2.12.11	Not Tested[15]
	MG requirements for VoIP Internal Interfaces	Required[2]	5.3.2.12.12	Met[24]
	MG Echo Cancellation	Required	5.3.2.12.13	Met
	MG Clock Timing	Required	5.3.2.12.14	Met
	MGC-MG CCA Functions	Required	5.3.2.12.15	Met
	MG ITU-T V.150.1	Required	5.3.2.12.16	Not Met[13, 14]
	MG Preservation of Call Ringing during Failure	Required	5.3.2.12.17	Not Met[21, 25]
11	**SG Requirements**			
	SG and CCS7 Network Interactions	Conditional	5.3.2.13.5.1	Not Tested[15]
	SG Interactions with CCA	Conditional	5.3.2.13.5.2	Not Tested[15]
	SG Interworking Functions	Conditional	5.3.2.13.5.3	Not Tested[15]

Table 2-6. SUT Capability Requirements and Functional Requirements Status (continued)

CR/FR ID	Capability/Function	Applicability[1]	UCR Reference	Status
12	**WWNDP Requirements**			
	WWNDP	Required	5.3.2.16	Met
	DSN WWNDP	Required	5.3.2.16.1	Partially Met[26]
13	**Commercial Cost Avoidance**			
	Commercial Cost Avoidance	Required	5.3.2.23	Not Tested[27]
14	**AS-SIP Based for External Devices (Voicemail, Unified Messaging, and Automated Receiving Devices)**			
	AS-SIP Requirements for External Interfaces	Conditional[2]	5.3.2.24	Not Tested[15]
15	**Precedence Call Diversion**			
	Precedence Call Diversion	Required	5.3.2.25	Partially Met[17]
16	**Attendant Station Features**			
	Precedence and Preemption	Required[2]	5.3.2.26.1	Not Met[17]
	Call Display	Required[2]	5.3.2.26.2	Not Met[17]
	Class of Service Override	Required[2]	5.3.2.26.3	Not Met[17]
	Busy Override and Busy Verification	Required[2]	5.3.2.26.4	Not Met[17]
	Night service	Required[2]	5.3.2.26.5	Not Met[17]
	Automatic Recall of Attendant	Required[2]	5.3.2.26.6	Not Met[17]
	Calls in Queue to the Attendant	Required[2]	5.3.2.26.7	Not Met[17]
17	**RTS Routing Database Requirements**			
	WAN SS to LRDB Interface: DB Queries for HR	Required[19]	5.3.2.28.2	Not Tested[27]
	HR Query from WAN SS	Required[19]	5.3.2.28.2.1	Not Tested[27]
	WAN SS Actions Based on DB Response	Required[19]	5.3.2.28.2.4	Not Tested[27]
	LSC to LRDB Interface: DB Queries for CCA	Required[2]	5.3.2.28.3	Not Tested[27]
	CCA Query from LSC	Required[2]	5.3.2.28.3.1	Not Tested[27]
	DB Response When Commercial Number is Not Found	Required[2]	5.3.2.28.3.3	Not Tested[27]
	LSC to MRDB Interface: DB Updates for CCA and HR	Required[2]	5.3.2.28.4	Not Tested[27]
	LDAP Update Operations	Required[2]	5.3.2.28.4.1	Not Tested[27]
	RTS Routing DB "Opt Out" for LSC End Users	Required[2]	5.3.2.28.4.2	Not Tested[27]
	Request Processing	Required[2]	5.3.2.28.5.2.3	Not Tested[27]
	Client Time-Out	Required	5.3.2.28.5.2.3.1	Not Tested[27]
	Data Caching	Required	5.3.2.28.5.2.4.2	Not Tested[27]
	Failover Procedures	Required	5.3.2.28.5.2.5	Not Tested[27]
	MRDB Failover	Required[2]	5.3.2.28.5.2.5.1	Not Tested[27]
	LRDB Failover	Required	5.3.2.28.5.2.5.2	Not Tested[27]
	Alarms	Required	5.3.2.28.6.3	Not Tested[27]
	Logs	Required	5.3.2.28.6.4	Not Tested[27]
	Performance Monitoring	Conditional	5.3.2.28.6.7	Not Tested[27]
	HR Requirements for Preventing PRI "Hairpin" Routes	Required[3]	5.3.2.28.8	Not Tested[27]
	SS Requirements for TBCT	Required[3]	5.3.2.28.8.1	Not Tested[27]
	SS Requirements for DSN HR	Required[3]	5.3.2.28.8.2	Not Tested[27]
	SS HR Call Flow using DSN HR	Required[3]	5.3.2.28.8.2.3	Not Tested[27]

Table 2-6. SUT Capability Requirements and Functional Requirements Status (continued)

CR/FR ID	Capability/Function	Applicability[1]	UCR Reference	Status
18	**AS-SIP Requirements**			
	SIP Requirements for AS-SIP Signaling Appliances and AS-SIP EIs	Required[2]	5.3.4.7	Partially Met[7]
	SIP Session Keep-Alive Timer	Required	5.3.4.8	Met
	Session Description Protocol	Required	5.3.4.9	Met
	Precedence and Preemption	Required	5.3.4.10	Met
	Policing of Call Count Thresholds	Required[19]	5.3.4.11	Met
	Video Telephony – General Rules	Required	5.3.4.12	Met
	Calling Services	Required	5.3.4.13	Met
	SIP Translation Requirements for Inter-working AS-SIP Signaling Appliances	Required	5.3.4.14	Met
	Relevant Timers for the Terminating Gateway and the Originating Gateway	Required	5.3.4.15	Not Tested[28]
	SIP Requirements for Interworking AS-SIP Signaling Appliances	Required	5.3.4.16	Met
	Keep-Alive Timer Requirements for Interworking AS-SIP Signaling Appliances	Required	5.3.4.17	Met
	Precedence and Preemption Extensions for Interworking AS-SIP Signaling Appliances	Required	5.3.4.18	Met
	Supplementary Services	Required	5.3.4.19	Met
19	**IPv6 Requirements**			
	Product Requirements	Required	5.3.5.4	Partially Met[29]
20	**NM Requirements**			
	LSC Management Function	Required[2]	5.3.2.7.2.6	Met
	VVoIP NMS Interface Requirements	Required	5.3.2.4.4	Met
	General Management requirements	Required	5.3.2.17.2	Met
	Requirement for FCAPS Management	Required	5.3.2.17.3	Partially Met[30, 31]
	NM requirements of Appliance Functions	Required	5.3.2.18	Met
	Accounting Management	Required	5.3.2.19	Met
20	**Information Assurance**			
	Information Assurance Requirements	Required	5.4	Met[32]

NOTES:

1. The annotation of 'required' refers to a high-level requirement category. The applicability of each sub-requirement is provided in Enclosure 3.
2. This requirement applies specifically to the integrated LSC and not to the WAN SS.
3. The SUT softphones do not support a distinct DSCP tag for each of the five precedence levels. Only one DSCP tag is supported for all precedence levels. This is a limitation of the operating system on the softphones (Microsoft Windows 7) and cannot be changed by the vendor. DISA adjudicated this as minor since all voice is queued together in the four-queue model currently used in deployed ASLANs. This discrepancy applies to the integrated LSC.
4. The SUT does not support a reminder ring notification with Call Forwarding Variable. DISA adjudicated this as minor and stated the intent to change this requirement to conditional in the next version of the UCR.
5. When the SUT is in a call with the Cisco Unified Communications Manager 8.0(2), the SUT IP EIs do not release a call from hold and the call cannot be resumed. DISA adjudicated this as minor with the vendor POA&M to resolve this issue by 17 October 2012. This discrepancy applies to the integrated LSC.
6. The SUT allows the preemption of a 911 caller and the 911 operator. DISA has accepted and approved the vendor's POA&M and adjudicated this discrepancy as having a minor operational impact. This discrepancy applies to the integrated LSC.
7. Testing with the Teo AEI was unable to be completed due to issues with TLS and therefore the SUT is not certified with non-proprietary AEIs. DISA has accepted and approved the vendor's POA&M and adjudicated this discrepancy as having a minor operational impact. This discrepancy applies to the integrated LSC.
8. When the SUT fails over from the primary SESM to the secondary SESM, the SUT IP EI's configured to use IPv6 take approximately 10 to 15 minutes to register to the secondary SESM. After this time, the IP EI's do successfully register to the secondary SESM and gain full functionality. Also, the SUT IP EI's intermittently dropped active calls during the failover. DISA has accepted and approved the vendor's POA&M and adjudicated this discrepancy as having a minor operational impact. This discrepancy applies to the integrated LSC.

Table 2-6. SUT Capability Requirements and Functional Requirements Status (continued)

NOTES (continued):

9. The SUT does not fully support SS and LSC dual-homing failover requirements. DISA adjudicated this discrepancy and determined that the UCR failover requirements are immature and require a rewrite. Avaya, in coordination with DISA NS2, has agreed to participate in a multi-vendor interoperability test event to test failover mechanisms between LSCs and SSs in the timeframe determined by DISA NS2 in order to address this discrepancy. The outcome of this event will help determine the path forward. DISA NS2 has agreed to a Condition of Fielding that the initial UC APL certification will not provide for failover capability and this certification is predicated on participation in and successful outcome from NS2 scheduled multi-vendor test event.
10. The SUT IAD EI's (Audiocodes 112/124) do not provide PNT during preempt for reuse scenarios. DISA has accepted and approved the vendor's POA&M and adjudicated this discrepancy as having a minor operational impact. This discrepancy applies to the integrated LSC.
11. The vendor submitted LoC states the SUT does not support the ITU-T G.722.1 voice codec. DISA has accepted and approved the vendor's POA&M and adjudicated this discrepancy as having a minor operational impact. This discrepancy applies to the integrated LSC.
12. The SUT PEI's were tested and met audio performance requirements. This discrepancy applies to the integrated LSC.
13. The SUT does not support the ITU-T V.150.1 protocol. DISA has accepted and approved the vendor's POA&M and adjudicated this discrepancy as having a minor operational impact.
14. The vendor cannot dynamically invoke ITU-T T.38 and ITU-T V.150.1 in accordance with UCR 2008, change 3, section 5.3.2.12.16. The vendor stated this is a limitation of the Audiocodes gateway and requires an update before this can be tested. DISA has accepted and approved the vendor's POA&M and adjudicated this discrepancy as having a minor operational impact.
15. This interface or capability is a conditional requirement for a WANN SS or LSC and was not tested.
16. The SUT demonstrated video requirements via Softphone only, not PEIs (Proprietary Hard Video Phones) nor AEI video phones. The vendor did not provide a PEI or AEI video capability. This was previously adjudicated for another vendor by DISA to have a low operational impact because of the limited deployment of PEIs with video. This discrepancy applies to the integrated LSC.
17. The SUT does not support an attendant console. DISA adjudicated this as minor and stated the intent to change this requirement to conditional in the next version of the UCR. Furthermore, the SUT meets all MLPP diversion requirements with an alternate DN in lieu of an attendant console in accordance with UCR 2008, Change 3, section 5.3.2.2.2.1.2.5. This discrepancy applies to the integrated LSC.
18. The SUT is not capable of preventing or detecting and stopping hair-pin routing loops over ANSI T1.619a and commercial PRI trunk groups between a legacy switch and an LSC. DISA has accepted and approved the vendor's POA&M and adjudicated this discrepancy as having a minor operational impact. This discrepancy applies to the integrated LSC.
19. This requirement applies specifically to the WAN SS and not to the integrated LSC.
20. The SUT does not have an ITU-T H.323 gateway; therefore, this does not apply to the SUT.
21. The SUT allows AS-SIP sessions in a ringing state to fail when an internal failure occurs within the CCA. DISA has accepted and approved the vendor's POA&M and adjudicated this discrepancy as having a minor operational impact.
22. The AudioCodes M800 and M3K gateways do not allow a mix of PSTN/DSN trunk gateway configurations. Based on the vendor's POA&M from Release 2.0, the vendor stated this discrepancy would be fixed in AudioCodes version 6.02.054 and would be implemented in the AS 5300 Release 3 by 7 June 2012. However, Release 3 includes AudioCodes version 6.02A.043.001 and not 6.02A.054. DISA has accepted and approved the vendor's POA&M and adjudicated this discrepancy as having a minor operational impact. This discrepancy applies to the integrated LSC.
23. This requirement states that the appliance suppliers should support TDM trunk groups on their MG product that can interconnect with NEs in U.S. allied and coalition partner networks worldwide or foreign country PTT networks (OCONUS) worldwide. This requirement is for interconnection with a foreign country. The SUT is certified for use in the U.S., including CONUS, Alaska, Hawaii, and U.S. Caribbean and Pacific Territories. Although the SUT supports E1 interfaces, they were not tested and are not covered under this certification.
24. The SUT MGs do not support analog trunks. DISA stated the intent to change analog trunks to optional for an LSC MG in the next version of the UCR. This discrepancy applies to the integrated LSC.
25. The SUT MGs allow AS-SIP sessions in ringing state to fail during internal failure in MG. DISA adjudicated this as minor and stated the intent to change this requirement to conditional in the next version of the UCR.
26. The SUT does not support domain directory. DISA has accepted and approved the vendor's POA&M and adjudicated this discrepancy as having a minor operational impact.
27. The vendor has an LDAP server which is covered under a separate Interoperability Certification listed on the UC APL; however, this LDAP feature was not tested with the Release 3.0. DISA adjudicated this as minor because it was tested with Release 2.0. This feature will be tested with Release 3.0 once the LDAP is installed at JITC.
28. This requirement applies to gateways between AS-SIP and CCS7 links. Because CCS7 is a conditional requirement for WAN SSs and LSCs and not supported by the SUT, this requirement was not tested.
29. Per the vendor submitted LoC, the SUT does not properly support the following IPv6 requirements. The SUT does not support all DHCPv6 client messages and options. The SUT does not log all reconfigure events. The SUT SIP Core/Avaya Media Server does not allow disabling of duplicate address detection. DISA has accepted and approved the vendor's POA&M and adjudicated this discrepancy as having a minor operational impact.

Table 2-6. SUT Capability Requirements and Functional Requirements Status (continued)

NOTES (continued):
30. The SUT is not fully compliant with following NM call detail records format requirements. The SUT does not provide a voice quality record at the completion of each voice session. DISA has accepted and approved the vendor's POA&M and adjudicated this discrepancy as having a minor operational impact. The SUT has the ability to send the records over a secure connection. However, the SUT does not have the ability to transfer records to a removable physical storage media. DISA adjudicated this as minor and stated the intent to change this requirement to conditional in the next version of the UCR.
31. Although the SUT supports destination code controls, the SUT does not play the correct announcement to the calling party IAW the reference. DISA has accepted and approved the vendor's POA&M and adjudicated this discrepancy as having a minor operational impact.
32. The IA requirements are tested by an IA test team and the results published in a separate report, Reference (f).

LEGEND:

AEI	AS-SIP End Instrument
ANSI	American National Standards Institute
APL	Approved Products List
AS	Assured Services
ASAC	Assured Services Admission Control
AS-SIP	Assured Services Session Initiation Protocol
BRI	Basic Rate Interface
CAS	Channel Associated Signaling
CCA	Call Connection Agent
CCS7	Common Channel Signaling Number 7
CONUS	Continental United States
CR	Capability Requirement
DB	database
DHCPv6	Dynamic Host Control Protocol for IPv6
DISA	Defense Information Systems Agency
DN	Directory Number
DSCP	Differentiated Services Code Point
DSN	Defense Switched Network
E1	European Basic Multiplex Rate (2.048 Mbps)
EBC	Edge Boundary Controller
EI	End Instrument
FCAPS	Fault, Configuration, Accounting, Performance and Security
FR	Functional Requirement
G.722.1	ITU-T audio codec standard
H.323	Standard for multi-media communications on packet-based networks
HR	Hybrid Routing
IA	Information Assurance
IAD	Integrated Access Device
IAW	in accordance with
ID	Identification
IP	Internet Protocol
IPv6	Internet Protocol version 6
ISDN	Integrated Services Digital Network
ITU-T	International Telecommunication Union - Telecommunication Standardization Sector
IWF	Interworking Function
JITC	Joint Interoperability Test Command
LDAP	Lightweight Directory Access Protocol
LoC	Letter of Compliance
LRDB	Local Routing Database
LSC	Local Session Controller
Mbps	Megabits per second
MG	Media Gateway
MGC	Media Gateway Controller
MLPP	Multi-Level Precedence and Preemption
MRDB	Master Routing Database
NE	Network Element
NM	Network Management
NMS	Network Management System
NS2	Network Services
OCONUS	Outside the Continental United States
PBAS	Precedence Based Assured Services
PEI	Proprietary End Instrument
PNT	Precedence Notification Tone
POA&M	Plan of Action and Milestones
PRI	Primary Rate Interface
PSTN	Public Switched Telephone Network
PTT	Push-to-Talk
RTS	Real Time Services
SESM	Session Manager
SG	Signaling Gateway
SIP	Session Initiation Protocol
SS	Softswitch
SS7	Signaling System 7
SUT	System Under Test
T1	Digital Transmission Link Level 1 (1.544 Mbps)
T1.619a	SS7 and ISDN MLPP Signaling Standard for T1
T.38	Fax over IP
TBCT	Two B-channel Transfer
TDM	Time Division Multiplexing
TLS	Transport Layer Security
UC	Unified Capabilities
UCR	Unified Capabilities Requirements
UFS	User Features and Services
U.S.	United States
V.150	Modem over Internet Protocol Networks
VoIP	Voice over Internet Protocol
VVoIP	Voice and Video over Internet Protocol
WAN	Wide Area Network
WWNDP	Worldwide Numbering and Dialing Plan

a. Assured Services Product Features and Capabilities

(1) Differentiated Services Code Point (DSCP) Packet Marking. The UCR 2008, Change 3, section 5.3.2.2.1.4, states that as part of the session setup process,

the LSC controls what DSCP to use in the subsequent session media stream packets. The exact DSCP method used shall comply with section 5.3.3.3.2. The SUT met all DSCP packet marking requirements with testing and the vendor's LoC with the exception of the softphone, which is documented in paragraph 11.2.d(7). This discrepancy applies to the integrated LSC.

(2) Voice Features and Capabilities. The UCR 2008, Change 3, section 5.3.2.2.2.1, states that the LSC must provide all of the features listed in Table 5.3.2.2-1 of the UCR. The SUT met all Voice Features and Capabilities requirements, with the minor exceptions in the paragraphs below.

(a) The SUT does not support a reminder ring notification with Call Forwarding Variable. DISA adjudicated this as minor and stated the intent to change this requirement to conditional in the next version of the UCR.

(b) When the SUT is in a call with the Cisco Unified Communications Manager 8.0(2), the SUT IP EIs do not release a call from hold and the call cannot be resumed. This discrepancy applies to the integrated LSC. DISA has accepted and approved the vendor's POA&M and adjudicated this discrepancy as having a minor operational impact.

(3) Public Safety Features. The UCR 2008, Change 3, section 5.3.2.2.2.2, states the LSC must provide basic emergency service (911), tracing of terminating calls, outgoing call tracing, and tracing of a call in progress. The SUT met all Public Safety Features requirements with the following exception. The SUT allows the preemption of a 911 caller and the 911 operator. This discrepancy applies to the integrated LSC. DISA has accepted and approved the vendor's POA&M and adjudicated this discrepancy as having a minor operational impact.

(4) ASAC – Open Loop. The UCR 2008, Change 3, section 5.3.2.2.2.3, states the LSC must meet the ASAC requirements for the LSC and the MFSS. In the execution of ASAC, certain procedures need to be followed, such as (a) actions to be taken if a precedence session request cannot be completed because existing sessions are at equal or higher precedence, or (b) tones to be generated when a session is preempted. The SUT met all ASAC requirements with an integrated LSC.

(5) Signaling Protocols. The UCR 2008, Change 3, section 5.3.2.2.3, states the LSC must use appropriate signaling for specific trunk types. The control/management protocol between the PEI and the LSC is, in general, proprietary. The control/management protocol between the AEI and the LSC is AS-SIP as specified in Section 5.3.4, AS-SIP Requirements, of this document. The signaling protocol used on UC IP trunks is AS-SIP as specified in Section 5.3.4, AS-SIP Requirements. The MG in the LSC uses ANSI T1.619a PRI signaling on DSN PRI trunks. The SUT met all Signaling Protocol requirements with the following minor exception. Although the vendor states they support AEIs, preliminary testing with the Tone Commander AEI

failed due to the inability to support TLS. Additional testing is required. The SUT is not certified with AEIs. This discrepancy applies to the integrated LSC.

(6) Signaling Performance. The UCR 2008, Change 3, section 5.3.2.2.4, states the conditional requirements for call setup and tear-down times. The SUT met all signaling performance requirements.

b. Registration, Authentication, and Failover

(1) Registration. The UCR 2008, Change 3, section 5.3.2.3.1, states that registration and authentication between the LSC and EIs shall follow the requirements set forth in UCR 2008 Change 3 Section 5.4, Information Assurance Requirements. The IA requirements are tested by an IA test team and the results published in a separate report, Reference (f).

(2) Failover. The UCR 2008, Change 3, section 5.3.2.3.2, states that the LSCs shall be registered to a primary and backup MFSS. In case of failure of the primary SS, the LSC will default to the backup MFSS. The SUT met all failover requirements with the minor exceptions in the paragraphs below.

(a) When the SUT fails over from the primary SESM to the secondary SESM, the SUT IP EI's take approximately 10 to 15 minutes to register to the secondary SESM. After this time, the IP EI's do successfully register to the secondary SESM and gain full functionality. Also, the SUT IP EI's intermittently dropped active calls during the failover. This discrepancy applies to the integrated LSC. DISA has accepted and approved the vendor's POA&M and adjudicated this discrepancy as having a minor operational impact.

(b) The SUT does not fully support LSC dual-homing failover requirements. DISA has accepted and approved the vendor's POA&M and adjudicated this discrepancy as having a minor operational impact. This adjudication decision is predicated on the vendor's participation in a failover multi-vendor test event and a successful outcome with limited capabilities.

c. Product Physical, Quality, and Environmental Factors

(1) Availability. The UCR 2008, Change 3, section 5.3.2.5.2.1, states that the Assured Services subsystem shall have a hardware/software availability of 0.99999 (non-availability of no more than 5 minutes per year). This requirement was met via the vendor's LoC. The SUT met all component failover requirements.

(2) Maximum Downtimes. The UCR 2008, Change 3, section 5.3.2.5.2.2, states that the performance parameters associated with the ASLAN, MFSS, and LSC, when combined, shall meet the following maximum downtime requirements:

• IP (10/100 Ethernet) network links – 35 minutes/year

• IP subscriber – 12 minutes/year

This requirement was met via the vendor's LoC.

(3) Loss of Packets. The UCR 2008, Change 3, section 5.3.2.5.4, states that for VoIP devices, the voice quality shall have a MOS of 4.0 (R-Factor equals 80) or better, as measured in accordance with the E-Model. Additionally, these devices shall not lose two or more consecutive packets in a minute and shall not lose more than seven voice packets (excluding signaling packets) in a five-minute period. The SUT met all packet loss requirements for PEIs.

d. Voice End Instruments. The UCR 2008, Change 3, section 5.3.2.6.1, states that there are two types of IP voice instruments: PEIs and AEIs. The SUT met PEI requirements with the minor exceptions in the paragraphs below. Testing with the Teo AEI was unable to be completed due to issues with TLS and therefore the SUT is not certified with non-proprietary AEIs. This discrepancy applies to the integrated LSC. DISA has accepted and approved the vendor's POA&M and adjudicated this discrepancy as having a minor operational impact.

(1) Tones and announcements. UCR 2008, Change 3, section 5.3.2.6.1.1, states that tones and announcements, as required in UCR 2008, Change 3, section 5.3.2.4.1.1.1, UC Ringing Tones, Cadences, and Information Signals, and section 5.3.2.6.1.1.2, Announcements, shall be supported, except for the loss of C2 announcement. The SUT met all requirements for tones and announcements with the following exception. The SUT IAD EI's (Audiocodes 112/124) do not provide PNT during preempt for reuse scenarios. This discrepancy applies to the integrated LSC. DISA has accepted and approved the vendor's POA&M and adjudicated this discrepancy as having a minor operational impact.

(2) Audio codecs. The UCR 2008, Change 3, section 5.3.2.6.1.2, states that the LSC shall support the origination and termination of a voice session using the following codecs: ITU-T G.711 (a-law and µ-law), ITU-T G.729 or ITU-T G.729A, and ITU-T G.722.1. The SUT met all audio codecs requirements with the following exception: The vendor submitted LoC states the SUT does not support the ITU-T G.722.1 voice codec. This discrepancy applies to the integrated LSC. DISA has accepted and approved the vendor's POA&M and adjudicated this discrepancy as having a minor operational impact.

(3) VoIP PEI or AEI Audio Performance Requirements. The UCR 2008, Change 3, section 5.3.2.6.1.3, states that VoIP PEIs or AEIs (i.e., handset, headset, and hands-free types) shall comply with TIA-810-B, November 3, 2006. The SUT met all audio performance requirements for PEIs with testing and the vendor's LoC. Testing with the Teo AEI was unable to be completed due to issues with TLS and therefore the SUT is not certified with non-proprietary AEIs. This discrepancy applies to the integrated LSC. DISA has accepted and approved the vendor's POA&M and adjudicated this discrepancy as having a minor operational impact.

(4) VoIP Sampling Standard. The UCR 2008, Change 3, section 5.3.2.6.1.4, states that for Fixed-to-Fixed calls, the product shall use 20 ms as the default voice sample length, and as the basis for the voice payload packet size. The SUT met the VoIP sampling standard requirements for PEIs.

(5) Authentication to LSC. The UCR 2008, Change 3, section 5.3.2.6.1.5, states that the PEI and AEI shall be capable of authenticating itself to its associated LSC and vice versa. The SUT met all PEI to LSC authentication requirements.

(6) Analog Telephone Support. The UCR 2008, Change 3, section 5.3.2.6.1.6, states that analog instruments, including secure analog EIs, analog facsimile EIs, and analog modem EIs, shall be supported by the LSC either by a Terminal Adapter or an Integrated Access Device (IAD) connected to an Ethernet port. The SUT met all analog telephone support requirements via an IAD integrated within their standalone M-800, MP-124, and MP-112 IADs with the following minor exception. The vendor cannot dynamically invoke ITU-T T.38 and ITU-T V.150.1 in accordance with UCR 2008, change 3, section 5.3.2.12.16. The vendor stated this is a limitation of the Audiocodes gateway and requires an update before this can be tested. DISA has accepted and approved the vendor's POA&M and adjudicated this discrepancy as having a minor operational impact. In addition, the gateway cannot be configured for both ITU-T T.38 and ITU-T G.711 µ/A-law VBD. To support fax and modem dynamically, the SUT must be configured for ITU-T G.711 VBD µ/A-law. This configuration is essentially a pass-through mode with no protocol.

(7) Softphones. The UCR 2008, Change 3, section 5.3.2.6.1.7, states that the softphone shall be conceptually identical to a traditional IP “hard” telephone and is required to provide voice features and functionality provided by a traditional IP hard telephone. The SUT met all of the soft phone requirements with the following minor exception. The SUT softphones do not support a distinct DSCP tag for each of the five precedence levels. Only one DSCP tag is supported for all precedence levels. This is a limitation of the operating system on the softphones (Microsoft Windows 7) and cannot be changed by the vendor. DISA adjudicated this as minor since all voice is queued together in the four-queue model currently used in deployed ASLANs. This discrepancy applies to the integrated LSC.

(8) ISDN BRI. The UCR 2008, Change 3, section 5.3.2.6.1.8, states that the ISDN BRI EIs, including secure ISDN BRI EIs, may be supported by the LSC. The SUT integrated LSC does not support this interface. This is a conditional requirement for an LSC.

e. Video End Instruments. The LSC must support both voice and video. PEIs and AEIs can support only voice, only video, or both voice and video. The SUT integrated LSC demonstrated video requirements via Softphone only, not PEIs (Proprietary Hard Video Phones) nor AEI video phones. The vendor did not provide a PEI or AEI video capability.

(1) Video End Instrument. The UCR 2008, Change 3, section 5.3.2.6.2, states that video EIs are considered associated with the LSC and must have been designed in conjunction with the LSC design. An IP video instrument shall be designed in accordance with the acquiring activity requirements. The SUT integrated LSC does not provide any PEI or AEI video instruments. The SUT integrated LSC met video requirements via the softphone only.

(2) Display Messages, Tones, and Announcements. Tones and announcements, as appropriate for voice and video over IP, and as required, in UCR 2008, Sections 5.2.4.5.2, DSN Information Signals, 5.2.2.1.3, Announcements, shall be supported by the PEI and AEI. The SUT integrated LSC met video requirements via the softphone only.

(3) Video Codecs (Including Associated Audio Codecs). The product shall support the origination, maintenance, and termination of a video session using the following codecs: one G.xxx and one H.xxx must be used to create and sustain a video session. The SUT integrated LSC met video requirements via the softphone only.

f. LSC Requirements. The UCR 2008, Change 3, section 5.3.2.8.4, states that LSC functionality is conditional for a WAN SS. The SUT met the LSC requirements with an integrated LSC.

(1) Precedence Base Assured Service/Assured Services Admission Control (PBAS/ASAC) Requirements. The UCR 2008, Change 3, section 5.3.2.7.2.1, states the LSC shall meet all the requirements for PBAS/ASAC, as appropriate for VoIP only as specified in UCR 2008, Change 3, section 5.3.2.31.3, Multilevel Precedence and Preemption. The SUT integrated LSC met this requirement.

(2) Calling Number Delivery Requirements. The UCR 2008, Change 3, section 5.3.2.7.2.2, states that the calling number provided to the called party shall be determined by the dial plan serving the calling instrument in accordance with Telcordia Technologies GR-31-CORE *"CLASS℠ Feature: Calling Number Delivery,"* Issue 1, June 2000. The SUT integrated LSC met all calling number delivery requirements.

(3) LSC Signaling Requirements. The UCR 2008, Change 3, section 5.3.2.7.2.3, states that the LSC must provide signaling on the line side for local intra-enclave subscriber-to-subscriber calls, and trunk-side signaling for calls between an external enclave and a local subscriber. The SUT integrated LSC met all LSC signaling requirements.

(4) Service Requirements under Total Loss of WAN Transport. The UCR 2008, Change 3, section 5.3.2.7.2.4, states that in the event that a total loss of connectivity to the DISN WAN occurs, the LSC shall provide the following functions:

- Completion of local (intra-enclave) calls

• Routing of calls to the PSTN using a local MG (PRI or CAS as required by the local interface)
• User look-up of local directory information

The SUT integrated LSC met all service requirements under total loss of WAN transport. This was verified with testing and the vendor's LoC.

(5) Local Location Server and Directory. The UCR 2008, Change 3, section 5.3.2.7.2.5, states that the purpose of the Local Location Server (LLS) is to provide information on call routing and called address translation (where a called address is contained within the called SIP Uniform Resource Identifier (URI) in the form of the called number). The SUT integrated LSC met all LLS and directory requirements.

(6) LSC Transport Interface Functions. The UCR 2008, Change 3, section 5.3.2.7.2.7, states that the LSC Transport Interface functions provide interface and connectivity functions with the ASLAN and its IP packet transport network. The SUT integrated LSC met all transport interface function requirements.

(7) LSC to IP PEI, AEI, and Operator Console Status Verification. The UCR 2008, Change 3, section 5.3.2.7.2.10, states that periodically, the LSC shall verify the status of its registered and authenticated IP EIs. The SUT met all status verification requirements for PEIs. Testing with the Teo AEI was unable to be completed due to issues with TLS and therefore the SUT is not certified with non-proprietary AEIs. DISA has accepted and approved the vendor's POA&M and adjudicated this discrepancy as having a minor operational impact. The SUT does not support an attendant console. DISA adjudicated this as minor and stated the intent to change this requirement to conditional in the next version of the UCR. These discrepancies apply to the integrated LSC.

(8) Line-Side Custom Features Interference. The UCR 2008, Change 3, section 5.3.2.7.2.11, states that vendors may implement unique custom features applicable to the line side of the LSC. Line-side custom features must not interfere with the Assured Services requirements. The SUT integrated LSC offers line-side custom features, which do not interfere with Assured Services requirements.

(9) Loop Avoidance. The UCR 2008, Change 3, section 5.3.2.7.3, states that during the call establishment process, the product shall be capable of preventing or detecting and stopping hair-pin routing loops over ANSI T1.619a and commercial PRI trunk groups (i.e., T1 PRI and E1 PRI) between a legacy switch (e.g., TDM EO) and an LSC. The SUT did not meet the Loop Avoidance requirements for T1 PRI (ANSI T1.619a and NI-2) with the following minor exception. The SUT integrated LSC is not capable of preventing or detecting and stopping hair-pin routing loops over ANSI T1.619a and commercial PRI trunk groups between a legacy switch and an LSC. DISA has accepted and approved the vendor's POA&M and adjudicated this discrepancy as having a minor operational impact.

g. Policing Requirements. The UCR 2008, Change 3, section 5.3.2.7.5.1.5, states that the AS-SIP to ITU-T H.323 gateway only sends routine AS-SIP invites to the WAN SS, and the WAN SS must apply the standard ASAC policing rules for outbound routine voice and video requests. The SUT does not have an ITU-T H.323 gateway; therefore, this does not apply to the SUT.

h. Global Location Server Requirements. The UCR 2008, Change 3, section 5.3.2.8.4, states that the global location server is required in accordance with UCR 2008, Change 3, section 5.3.2.8.2.2. The global location server provides global location services and supports call routing where the called address points to a global destination rather than a local destination. The SUT met these requirements through testing.

i. Call Connection Agent Requirements

(1) CCA IWF Component. The UCR 2008, Change 3, section 5.3.2.9.2.1, states that the role of the IWF within the CCA is to support all the VoIP and TDM signaling protocols that the LSC supports for EIs, MGs, and EBCs, and to Interwork all these various signaling protocols with one another. The SUT met all CCA IWF requirements for T1 PRI (ANSI T1.619a and NI-2).

(2) CCA MGC Component. The UCR 2008, Change 3, section 5.3.2.9.2.2, states that the MGC within the CCA must control all MGs within the LSC or MFSS control all trunks within each MG, control all signaling and media streams on each trunk within each MG, accept IP-encapsulated signaling streams from an SG or MG, and to use either ITU-T recommendation H.248 or a supplier-proprietary protocol to accomplish these controls. The SUT met all CCA MGC requirements.

(3) SG Component. The UCR 2008, Change 3, section 5.3.2.9.2.3, states that the role of the CCA with respect to the SG is to control all SGs within the network appliance, and to control all signaling links (DoD CCS7) within each SG. This requirement is conditional for a WAN SS and LSC and was not tested.

(4) CCA-IWF Support for AS-SIP. The UCR 2008, Change 3, section 5.3.2.9.5.1, states that the CCA IWF shall support the AS-SIP protocol consistent with the detailed AS-SIP protocol requirements in Section 5.3.4, AS-SIP Requirements. The SUT met all requirements for CCA-IWF support for AS-SIP for required interfaces T1 PRI (ANSI T1.619a and NI-2).

(5) CCA-IWF Support for SS7. The UCR 2008, Change 3, section 5.3.2.9.5.2, states that CCA IWF may support the DoD CCS7 protocol, consistent with the detailed DoD CCS7 protocol requirements. This requirement is conditional for a WAN SS and LSC and was not tested.

(6) CCA-IWF Support for PRI, via MG. The UCR 2008, Change 3, section 5.3.2.9.5.3, states that the CCA IWF shall support the U.S./National ISDN version of the

ISDN PRI protocol. The SUT met all requirements for CCA-IWF support for T1 PRI (ANSI T1.619a and NI-2).

(7) CCA-IWF Support for CAS Trunks via MG. The UCR 2008, Change 3, section 5.3.2.9.5.4, states that support for CAS is a conditional requirement for LSCs. This requirement is conditional for a WAN SS and LSC and was not tested.

(8) CCA-IWF Support for PEI and AEI Signaling Protocols. The UCR 2008, Change 3, section 5.3.2.9.5.5, states that the CCA IWF shall support supplier-proprietary Voice and Video EIs and their associated proprietary EI signaling protocols. The SUT met all requirements for CCA-IWF support for PEI Signaling Protocols. The SUT demonstrated video requirements via Softphone only, not PEIs (Proprietary Hard Video Phones) nor AEI video phones. Testing with the Teo AEI was unable to be completed due to issues with TLS and therefore the SUT is not certified with non-proprietary AEIs. DISA has accepted and approved the vendor's POA&M and adjudicated this discrepancy as having a minor operational impact. The SUT does not support an attendant console. DISA adjudicated this as minor and stated the intent to change this requirement to conditional in the next version of the UCR. These discrepancies apply to the integrated LSC.

(9) CCA-IWF Support for VoIP and TDM Protocol Interworking. The UCR 2008, Change 3, section 5.3.2.9.5.6, states that the role of the IWF within the CCA is to support all the VoIP and TDM signaling protocols that the appliance supports for PEIs, AEIs, MGs, and EBCs, and interwork all these various signaling protocols with one another. The SUT met all requirements for CCA-IWF Support for VoIP and TDM Protocol Interworking required interfaces T1 PRI (ANSI T1.619a and NI-2).

(10) CCA Preservation of Call Ringing State during Failure Conditions. The UCR 2008, Change 3, section 5.3.2.9.6, states that the CCA in the LSC, MFSS, and WAN SS shall not allow AS-SIP sessions that have reached the ringing state to fail when an internal failure occurs within the CCA. The SUT allows AS-SIP sessions in a ringing state to fail when an internal failure occurs within the CCA. DISA has accepted and approved the vendor's POA&M and adjudicated this discrepancy as having a minor operational impact.

(11) CCA Interactions with Transport Interface Functions. The UCR 2008, Change 3, section 5.3.2.10.3, states that the CCA interacts with Transport Interface functions by using them to communicate with PEIs, AEIs, the EBC, the MGs, and the SG over the ASLAN. The SUT met all requirements for CCA interactions with transport interface functions with the exception of AEIs.

(12) CCA Interactions with the EBC. The UCR 2008, Change 3, section 5.3.2.10.4, states that the CCA interacts with the EBC by directing AS-SIP signaling packets to it (for signaling messages destined for an MFSS) and by accepting AS-SIP signaling packets from it (for signaling messages directed to the LSC from an MFSS). The SUT met all requirements for CCA interactions with the EBC.

(13) CCA Support for Admission Control. The UCR 2008, Change 3, section 5.3.2.10.5, states that the CCA interacts with the ASAC component of the LSC and MFSS to perform specific functions related to ASAC, such as counting internal, outgoing, and incoming calls; managing separate call budgets for VoIP and Video over IP calls; and providing preemption. The SUT met all requirements for CCA support for admission control.

(14) CCA Support for UFS. The UCR 2008, Change 3, section 5.3.2.10.6, states that the UFS Server is responsible for providing features and services to VoIP and Video PEIs/AEIs on an LSC or MFSS, where the CCA alone cannot provide the feature or service. The SUT met all requirements for CCA Support for UFS for PEIs only.

(15) CCA Support for IA. The UCR 2008, Change 3, section 5.3.2.10.7, states that the Information Assurance function within the appliance ensures that end users, PEIs, AEIs, MGs, SGs, and EBCs that use the appliance are all properly authenticated and authorized by the appliance. The IA function ensures that Voice and Video signaling streams that traverse the appliance and its ASLAN are encrypted properly SIP/TLS. The IA requirements are tested by an IA test team and the results published in a separate report, Reference (f).

(16) CCA Interaction with EIs. The UCR 2008, Change 3, section 5.3.2.10.10, states that the CCA in the LSC needs to interact with VoIP PEIs and AEIs served by that LSC. The LLS provides information on called address translation in response to call routing queries from the CCA. The CCA sends call routing queries to the LLS for both outgoing calls from appliance PEIs or AEIs (i.e., LSC and MFSS) and incoming calls to appliance PEIs or AEIs (i.e., LSC and MFSS). The SUT met all requirements for CCA interaction with PEIs only. Testing with the Teo AEI was unable to be completed due to issues with TLS and therefore the SUT is not certified with non-proprietary AEIs. DISA has accepted and approved the vendor's POA&M and adjudicated this discrepancy as having a minor operational impact.

(17) CCA Support for AS Voice and Video. The UCR 2008, Change 3, section 5.3.2.10.11, states that the CCA in the LSC shall support both assured Voice and Video services. The CCA in the MFSS or LSC needs to interact with VoIP PEIs and AEIs served by that MFSS or LSC. The VoIP interface between the PEI and the MFSS or LSC is left up to the network appliance supplier. The VoIP interface between the AEI and the MFSS or LSC is AS-SIP. The SUT met all requirements for CCA support for PEI's only. Testing with the Teo AEI was unable to be completed due to issues with TLS and therefore the SUT is not certified with non-proprietary AEIs. DISA has accepted and approved the vendor's POA&M and adjudicated this discrepancy as having a minor operational impact. The SUT demonstrated video requirements via Softphone only, not PEIs (Proprietary Hard Video Phones) nor AEI video phones.

(18) CCA Interactions with Service Control Functions. The UCR 2008, Change 3, section 5.3.2.10.12, states that the CCA shall support the ability to remove VoIP and Video sessions and session requests from the media server so the CCA can continue with necessary session processing once the media server has completed its functions. The SUT met all requirements for CCA interactions with service control functions.

(19) CCA Interworking between AS-SIP and CCS7. The UCR 2008, Change 3, section 5.3.2.11, provides basic requirements for interworking call setup and release signaling between a DoD network using AS-SIP and a network using CCS7. Interworking is performed at a node with CCA (SIP/CCS7 IWF) functionality that processes/interworks incoming CCS7 messages to outgoing AS-SIP messages, and similarly, incoming AS-SIP messages to outgoing CCS7 messages. This requirement is conditional for a WAN SS and LSC and was not tested.

j. MG Requirements

(1) Role of MG In LSC. The UCR 2008, Change 3, section 5.3.2.12.3.1, states the LSC MG supports interconnection of VoIP, facsimile over IP (FoIP), and modem over IP (MoIP) media streams with the LSC media server, which provides tones and announcements for LSC calls and LSC features. To support inter-enclave MoIP and FoIP, the LSC must meet ITU-T V.150.1 requirements. The AudioCodes M800 and M3K gateways do not allow a mix of PSTN/DSN trunk gateway configurations. Based on the vendor's POA&M from Release 2.0, the vendor stated this discrepancy would be fixed in AudioCodes version 6.02.054 and would be implemented in the AS 5300 Release 3 by 7 June 2012. However, Release 3 includes AudioCodes version 6.02A.043.001 and not 6.02A.054. DISA has accepted and approved the vendor's POA&M and adjudicated this discrepancy as having a minor operational impact.

(2) MG Support for ASAC. The UCR 2008, Change 3, section 5.3.2.12.4.1, states the MG assists the CCA in performing ASAC (i.e., call preemption based on per-call precedence levels) for outgoing TDM calls at MGs and for incoming TDM calls at MGs. The SUT met all requirements for MG Support for ASAC.

(3) MG and IA Functions. The UCR 2008, Change 3, section 5.3.2.12.4.2, states the IA function within the appliance ensures that end users, PEIs, AEIs, MGs, SGs, and EBCs that use the appliance are all properly authenticated by the appliance. The IA function also ensures that VoIP signaling streams and media streams that traverse the appliance and its ASLAN are properly encrypted, using SIP/TLS and SRTP, respectively. The IA requirements are tested by an IA test team and the results published in a separate report, Reference (f).

(4) MG Interaction with Service Control Function. The UCR 2008, Change 3, section 5.3.2.12.4.3, states the media server is responsible for playing tones and announcements to calling and called parties. The media server is responsible for routing individual VoIP, FoIP, and MoIP media streams to the media server when

instructed to do so by the CCA/MGC. When instructed to do so by the CCA/MGC, the MG is responsible for removing individual VoIP, FoIP, and MoIP media streams from the media server, and for either disconnecting them entirely, or routing them on to other LSC end users (e.g., VoIP or video EIs). The SUT met all requirements for MG interaction with service control function.

(5) MG Interactions with IP Transport Interface Functions. The UCR 2008, Change 3, section 5.3.2.12.4.4, states the transport interface functions in the LSC provide interface and connectivity functions with the ASLAN and its IP packet transport network. The SUT met all requirements for MG Interactions with IP Transport Interface Functions.

(6) MG-EBC interactions. The UCR 2008, Change 3, section 5.3.2.12.4.5, states the MG interacts with the EBC by sending SRTP media streams to it (for call media destined for a PEI, AEI, or MG that is served by another appliance outside the LSC), or by accepting SRTP media streams from it (for call media arriving from a PEI, AEI, or MG that is served by another appliance outside the LSC). The SUT met all requirements for MG-EBC interactions for PEI interactions only.

(7) MG IP-Based PSTN Interface Requirements. The UCR 2008, Change 3, section 5.3.2.12.4.7, states the Voice and Video over IP interfaces from the UC network to the PSTN have not been defined. Therefore, the LSC and MFSS to PSTN interface will remain TDM. Interfaces from an LSC or MFSS to the PSTN will be via an MG with TDM interfaces. This requirement is conditional for a WAN SS and LSC and was not tested.

(8) MG Interaction with EIs. The UCR 2008, Change 3, section 5.3.2.12.4.8, states the MG in the MFSS or LSC needs to interact with VoIP EIs served by that MFSS or LSC, and with VoIP EIs served by other MFSSs or LSCs. The VoIP signaling interface between the PEI and the MFSS or LSC is left up to the network appliance supplier. The VoIP signaling interface between the AEI and the MFSS or LSC is AS-SIP. The SUT integrated LSC met all MG Interaction with VoIP EIs requirements for PEI's only. Testing with the Teo AEI was unable to be completed due to issues with TLS and therefore the SUT is not certified with non-proprietary AEIs. DISA has accepted and approved the vendor's POA&M and adjudicated this discrepancy as having a minor operational impact.

(9) MG Support for User Features and Services. The UCR 2008, Change 3, section 5.3.2.12.4.9, states the MG shall support the operation of features for VoIP and Video end users, consistent with the operation of this feature on analog and ISDN lines in DoD TDM switches today. The SUT integrated LSC met all requirements for MG Support for User Features and Services.

(10) MG Interface to TDM. The UCR 2008, Change 3, section 5.3.2.12.5, states each appliance MG shall support TDM trunk groups that can interconnect with the following devices in DoD networks, in the United States and worldwide: PBXs,

SMEOs, EOs, and MFSs. The SUT met all requirements for MG Interface to TDM devices in DoD Networks.

(11) MG Interface to TDM Allied and Coalition. The UCR 2008, Change 3, section 5.3.2.12.6, states the appliance suppliers should support TDM trunk groups on their MG product that can interconnect with devices in U.S. allied and coalition partner networks worldwide. This requirement is for interconnection with a foreign country. Although the SUT supports E1 interfaces, they were not tested and are not covered under this certification. The SUT is certified for use in the U.S., including CONUS, Alaska, Hawaii, and U.S. Caribbean and Pacific Territories. The SUT is not certified for joint use outside CONUS in ETSI-compliant countries.

(12) MG Interface to TDM PSTN in US. The UCR 2008, Change 3, section 5.3.2.12.7, states each appliance MG shall support TDM trunk groups that can interconnect with NEs in the PSTN in the United States. The SUT met all requirements for MG interface to TDM PSTN in the U.S. using ISDN T1 PRI.

(13) MG Interfaces to TDM PSTN OCONUS. The UCR 2008, Change 3, section 5.3.2.12.8, states the appliance supplier (i.e., LSC or MFSS supplier) should support TDM trunk groups on its MG product that can interconnect with devices in foreign country Push-to-Talk (PTT) networks (OCONUS) worldwide. This requirement is for interconnection with a foreign country. Although the SUT supports E1 interfaces, they were not tested and are not covered under this certification. The SUT is certified for use in the U.S., including CONUS, Alaska, Hawaii, and U.S. Caribbean and Pacific Territories. The SUT is not certified for joint use outside CONUS in ETSI-compliant countries.

(14) MG Support for CCS7. The UCR 2008, Change 3, section 5.3.2.12.9, states the MG shall support TDM trunk groups that are controlled by a separate CCA-to-SG signaling link that carries DoD CCS7 protocol. The MG shall support these TDM trunk groups, and the SG shall support DoD CCS7 signaling. This requirement is conditional for a WAN SS and LSC and was not tested.

(15) MG Support for ISDN PRI Trunks. The UCR 2008, Change 3, section 5.3.2.12.10, states the MG shall support ISDN PRI trunk groups that carry the U.S./National ISDN version of the ISDN PRI protocol. The SUT met all requirements for MG Support for ISDN T1 PRI trunks.

(16) MG Support for CAS Trunks. The UCR 2008, Change 3, section 5.3.2.12.11, states the MG shall support CAS trunk groups that carry the U.S. version of the CAS protocol. This requirement is conditional for a WAN SS and LSC and was not tested.

(17) MG requirements for VoIP Internal Interfaces. The UCR 2008, Change 3, section 5.3.2.12.12, states the MG shall connect to the ASLAN of the appliance using the physical layer and data link layer protocols of the ASLAN. In this case, the MG shall

appear to the MGC, EBC, and appliance PEIs/AEIs as a physical layer and data link layer endpoint on a LAN switch in the ASLAN. The SUT met requirements for VoIP internal interfaces with the following minor exception. The SUT MGs do not support analog trunks as required in UCR 2008, Change 3, section 5.3.2.12.12.8. DISA stated the intent to change analog trunks to optional for an LSC MG in the next version of the UCR.

(18) MG Echo Cancellation (EC). The UCR 2008, Change 3, section 5.3.2.12.13, states the MG shall provide an EC capability with an echo path capacity (echo tail length) of at least 64 ms. The MG shall provide echo cancellation for voice, G3 Fax, and VBD modem fax calls. Each MG EC shall be equipped with an "echo canceller disabling signal" tone detector. The SUT met all requirements for MG Echo Cancellation.

(19) MG Clock Timing. The UCR 2008, Change 3, section 5.3.2.12.14, states the MG shall derive its clock timing from a designated T1 or PRI interface. The SUT met all MG clock timing requirements.

(20) MGC-MG CCA Functions. The UCR 2008, Change 3, section 5.3.2.12.15, states the MGC within the CCA shall be responsible for controlling all the MGs within the LSC or MFSS. The MGC within the CCA shall be responsible for controlling all of the trunks within each MG within the LSC or MFSS. The MGC shall be responsible for controlling all media streams on each trunk within the MG. The MGC shall accept IP signaling streams from an MG, conveying received PRI or CAS trunk signaling and return IP signaling streams to the MG accordingly for conversion to transmitted PRI or CAS trunk signaling. The SUT met all MGC-MG CCA function requirements.

(21) MG ITU-T V.150.1. The UCR 2008, Change 3, section 5.3.2.12.16, states that when the MG uses ITU-T V.150.1 inband signaling to transition between audio, FoIP, modem relay, or VBD states or modes, the MG shall continue to use the established session's protocol (e.g., decimal 17 for UDP) and port numbers so that the transition is transparent to the EBC. The SUT does not support the ITU-T V.150.1 protocol. DISA has accepted and approved the vendor's POA&M and adjudicated this discrepancy as having a minor operational impact.

(22) MG Preservation of Call Ringing during Failure. The UCR 2008, Change 3, section 5.3.2.12.17, states the LSC MG, MFSS MG, and WAN SS MG shall not allow AS-SIP sessions that have reached the ringing state to fail when an internal failure occurs within that MG. The SUT met with the following minor exception. The SUT MGs allow AS-SIP sessions in ringing state to fail during internal failure in MG. DISA adjudicated this as minor and stated the intent to change this requirement to conditional in the next version of the UCR.

k. SG Requirements

(1) SG and CCS7 network Interactions. The UCR 2008, Change 3, section 5.3.2.13.5.1, states the SG shall support signaling connectivity to the DoD CCS7 network based on ANSI T1.111. This requirement is conditional for a WAN SS and LSC and was not tested.

(2) SG Interactions with CCA. The UCR 2008, Change 3, section 5.3.2.13.5.2, states the SG shall support a supplier-specific interface to the CCA for interactions between the SG and CCA. This requirement is conditional for a WAN SS and LSC and was not tested.

(3) SG Interworking Functions. The UCR 2008, Change 3, section 5.3.2.13.5.3, states the SG will terminate CCS7 links on its CCS7 side and transport the CCS7 call control and service control protocols (i.e., ISUP and TCAP) to the CCA. Similarly, the SG will receive CCS7 call control and service control messages from the CCA. The SG is responsible for the appropriate formatting of the messages for transmission on the CCS7 links. This requirement is conditional for a WAN SS and LSC and was not tested.

l. WWNDP Requirements

(1) WWNDP. The UCR 2008, Change 3, section 5.3.2.16, states that the precedence level and dialed number input to the PEI or AEI shall be as specified in the sub-paragraphs of this section. The SUT met all requirements for WWNDP for PEIs.

(2) DSN WWNDP. The UCR 2008, Change 3, section 5.3.2.16.1, states that the LSCs must support DSN WWNDP and must support mapping of DSN telephone numbers to SIP URIs, provides examples of DSN numbers using SIP URIs that use the syntax defined in RFC 3966. The SUT met all DSN WWNDP requirements with the following minor exception. The SUT does not support domain directory. DISA has accepted and approved the vendor's POA&M and adjudicated this discrepancy as having a minor operational impact.

m. Commercial Cost Avoidance. The UCR 2008, Change 2, section 5.3.2.23, states that the Commercial Cost Avoidance requirements are in UCR 2008, Change 3, sections 5.3.2.28.3 and 5.3.2.28.4. The LSC must use a Commercial Cost Avoidance functionality to route calls from an IP EI to a PSTN E.164 number in a manner which will minimize commercial costs associated with DSN calls. The vendor has an LDAP server which is covered under a separate Interoperability Certification listed on the UC APL; however, this LDAP feature was not tested with the Release 3.0. DISA adjudicated this as minor because it was tested with Release 2.0. This feature will be tested with Release 3.0 once the LDAP is installed at JITC.

n. AS-SIP Based for External Devices (Voicemail, Unified Messaging and Automated Receiving Devices). The UCR 2008, Change 3, section 5.3.2.24, states that the LSC shall support all mandatory requirements in RFC 3842. No AS-SIP external devices were tested. This requirement is conditional for a WAN SS and LSC.

o. Precedence Call Diversion (PCD). The UCR 2008, Change 3, section 5.3.2.25, states that support for PCD from one UC EI to another on the same or on another LSC is required. Support for PCD from a UC EI on an LSC to a DSN EI or from a DSN EI to a UC EI on an LSC is not required.

(1) The AS-SIP signaling appliance shall divert ALL unanswered RTS VoIP calls above the ROUTINE precedence level to a designated RTS Directory Number (DN) for PCD. The SUT met all precedence call diversion requirements. This diversion shall occur after a specified PCD time period, selectable from 15 to 45 seconds. This time period shall be configurable to less than the call forward time period for unanswered calls that are forwarded to voicemail and Automatic Call Distribution (ACD) systems. The SUT met this requirement through testing with ROUTINE calls forwarded to an alternate DN for voicemail. The SUT was not tested with an ACD system.

(2) Unanswered UC VoIP calls above ROUTINE shall not be forwarded to voicemail or ACD systems. The SUT met this requirement through testing with calls above ROUTINE not being forwarded to an alternate DN for voicemail. The SUT was not tested with an ACD system.

(3) Calls above the ROUTINE precedence that are destined to DNs assigned to voicemail or ACD systems shall only divert to the PCD DN as specified above. The SUT met this requirement through testing.

(4) ROUTINE precedence level calls that are destined to DNs assigned to voicemail or ACD systems shall be allowed. The SUT met this requirement through testing with ROUTINE calls forwarded to an alternate DN for voicemail. The SUT was not tested with an ACD system.

(5) Incoming precedence calls to the attendant's DN and incoming calls that are diverted to this attendant DN, shall be placed in a queue for the attendant console. A distinctive visual signal indicating the precedence level of the call shall be sent to the attendant console. The SUT does not support an attendant console.

(6) Incoming calls to the console DN shall be queued for attendant service by call precedence and time of arrival. The highest precedence call with the longest holding time in queue shall be offered to an attendant first. The SUT does not support an attendant console.

p. Attendant Station Features. The UCR 2008, Change 3, section 5.3.2.26, states that the attendant features in this section apply to attendant consoles that are provided as part of the local LSC, or provided by an external CPE attendant console. The SUT integrated LSC does not support an attendant console, therefore none of the requirements in the paragraphs below were tested. DISA stated the intent to change this to conditional in the next version of the UCR. Furthermore, the SUT meets all

MLPP diversion requirements with an alternate DN in lieu of an attendant console in accordance with UCR 2008, Change 3, section 5.3.2.2.2.1.2.5.

(1) Precedence and Preemption. The attendant console shall interoperate with PBAS/ASAC. The attendant console shall interoperate with MLPP.

(2) Call Display. The attendant console shall provide a visual display of each precedence level and the calling number, for incoming direct dialed calls to the attendant, and diverted calls to the attendant.

(3) Class of Service Override. If the LSC, MFSS, or WAN SS supports assignment of a CoS to an individual EI, then this appliance and the attendant console shall give the attendant the ability to override any incoming call's calling party CoS (based on calling area or precedence) on a call-by-call basis.

(4) Busy Override and Busy Verification. The appliance and the attendant console shall give the attendant the ability to verify and override a busy line condition.

(5) Night service. The appliance and the attendant console shall have the ability to route all calls that are normally directed to the console to a separate night service deflection number.

(6) Automatic Recall of Attendant. When an attendant redirects an incoming call to a destination station, and that station is either busy or does not answer the call within a preset time, the appliance and the attendant console shall ensure that calling party on the redirected call is recalled automatically to the console.

(7) Calls in Queue to the Attendant. The appliance and the attendant console shall have the ability to place calls (both directed to the attendant and diverted to the attendant) into a waiting queue. Calls in the attendant queue shall not be lost when a console is placed out of service or forwarded to night service.

q. RTS Routing Database Requirements. The requirements in the subparagraphs below were not tested. The vendor has an LDAP server which is covered under a separate Interoperability Certification listed on the UC APL; however, this LDAP feature was not tested with the Release 3.0. DISA adjudicated this as minor because it was tested with Release 2.0. This feature will be tested with Release 3.0 once the LDAP is installed at JITC.

(1) LSC to Local Routing Database (LRDB) Interface: Database (DB) Queries for CCA. The UCR 2008, Change 3, section 5.3.2.28.3, states that the LSC shall meet the requirements for the interface to the LRDB defined in this section. The LSC shall allow CCA to be activated and configured as defined in this section.

(2) CCA Query from LSC. The UCR 2008, Change 3, section 5.3.2.28.3.1, states that when the CCA feature is activated, the LSC shall make a CCA query to the

LRDB for each call that is placed as specified in this section. The LSC shall query the LRDB on “99” and “98” dialed commercial numbers. When the DB responds to this query with a DSN number that matches, the LSC shall route the call request of the appropriate IP or TDM path using the DSN number returned by the DB.

(3) DB Response When a Commercial Number is Not Found. The UCR 2008, Change 3, section 5.3.2.28.3.3, states that the LSC shall accept and process the response and route the call request as defined in this section.

(4) LSC to Master Routing Database (MRDB) Interface: DB Updates for CCA and Hybrid Routing (HR). The UCR 2008, Change 3, section 5.3.2.28.4, states that the LSC and the MRDB shall support the routing DB update feature IAW the requirements in this section and sections 5.3.2.28.5 and 5.3.2.28.6.

(5) LDAP Update Operations. The UCR 2008, Change 3, section 5.3.2.28.4.1, states that the LSC shall send a DB update automatically to the MRDB whenever a new end user is added to the LSC. The LSC shall automatically send a DB update to the MRDB whenever an existing user’s number data is modified at the LSC. The LSC shall send a DB update automatically to the MRDB whenever an existing end user is deleted from the LSC. These requirements apply unless the RTS Routing DB “opt out” indication as been made for that user.

(6) RTS Routing DB “Opt Out” for LSC End Users. The UCR 2008, Change 3, section 5.3.2.28.4.2, states that the information maintained by an LSC for an EI provisioned on that LSC shall include an indication to exclude an entry for that user from the RTS Routing DB. It shall be possible to set or change this indication for an end user.

(7) Request Processing. The UCR 2008, Change 3, section 5.3.2.28.5.2.3, states that the LSCs are expected to direct their LDAP search requests to the LRDBs for call processing purposes. The LSC is expected to perform updates to the MRDB; it could add a new entry, delete an existing entry, or modify values of attributes in an existing entry.

(8) Client Time-Out. The UCR 2008, Change 3, section 5.3.2.28.5.2.3.1, states that if an LDAP operation does not return results within a preset time, the LSC should be able to terminate the session. The LSC shall allow the setting of a time-out interval between 1 and 5 seconds, adjusted in increments of 1 second.

(9) Data Caching. The UCR 2008, Change 3, section 5.3.2.28.5.2.4.2, states that the LSC shall implement storage buffers that are capable of supporting LDAP entry caches. This capability shall be configurable.

(10) Failover Procedures. The UCR 2008, Change 3, section 5.3.2.28.5.2.5, states that the LSC will maintain communication with both the primary and backup MRDBs via periodic keep-alive messages.

(11) MRDB Failover. The UCR 2008, Change 3, section 5.3.2.28.5.2.5.1, states that each LSC that access the primary and backup MRDBs shall support the configuration of two DISA network IP addresses for those MRDBs. The LSC shall communicate with the MRDBs as specified in this section if the primary MRDB is unavailable.

(12) LRDB Failover. The UCR 2008, Change 3, section 5.3.2.28.5.2.5.2, states that the LSC will maintain communication with both the primary and secondary LRDBs via periodic keep-alive messages. Each LSC that access the primary and backup LRDBs shall support the configuration of two DISA network IP addresses for those LRDBs. The LSC shall communicate with the LRDBs as specified in this section if the primary LRDB is unavailable.

(13) Alarms. The UCR 2008, Change 3, section 5.3.2.28.6.3, states that the LSC shall support the generation and reporting of DB alarms.

(14) Logs. The UCR 2008, Change 3, section 5.3.2.28.6.4, states that the LSC shall support logging DB failover events.

(15) Performance Monitoring. The UCR 2008, Change 3, section 5.3.2.28.6.7, states that the LSC may collect performance measurements and make them available to network administrators.

r. AS-SIP Requirements

(1) SIP Requirements for AS-SIP Signaling Appliances and AS-SIP EIs. The UCR 2008, Change 3, section 5.3.4.7, states that there are two categories of IP EIs; AS-SIP EIs are IP EIs that support AS-SIP, and Proprietary IP EIs, which are SIP, ITU-T H.323, or other vendor proprietary EIs. The LSCs must meet the requirements defined in this section for supporting the interoperable AS-SIP line side interface with AS-SIP EIs. The LSCs that support SIP EIs must comply with the differentiated set of requirements defined for ITU-T H.323 and/or vendor-proprietary EIs if they serve ITU-T H.323 and/or vendor-proprietary EIs. Testing with the Teo AEI was unable to be completed due to issues with TLS and therefore the SUT is not certified with non-proprietary AEIs. DISA has accepted and approved the vendor's POA&M and adjudicated this discrepancy as having a minor operational impact.

(2) SIP Session Keep-Alive Timer. The UCR 2008, Change 3, section 5.3.4.8, states that the AS-SIP signaling appliances must support the keep-alive mechanism for SIP sessions in accordance with RFC 4028. The SUT met all keep-alive timer requirements.

(3) Session Description Protocol (SDP). The UCR 2008, Change 3, section 5.3.4.9, states that a session description consists of a session-level description (details that apply to the whole session and all media streams) and optionally several media-

level descriptions (details that apply to a single media stream). The LSC must support SDP in accordance with RFC 2327. The SUT met all SDP requirements.

(4) Precedence and Preemption. The LSC must meet the detailed requirements for the execution of preemption and the handling of precedence information as defined in UCR 2008, Change 3, section 5.3.4.10. The SUT met all critical precedence and preemption requirements.

(5) Policing of Call Count Thresholds. The SS must meet the detailed requirements for voice and video policing as defined in UCR 2008, Change 3, section 5.3.4.11. The SUT met all policing of call count threshold requirements.

(6) Video Telephony – General Rules. Video calls must meet the detailed requirements for video telephony messaging as defined in UCR 2008, Change 3, section 5.3.4.12. The SUT met all critical video telephony requirements with the softphone.

(7) Calling Services. The LSC must meet AS-SIP call flow requirements for calling services features as defined in UCR 2008, Change 3, section 5.3.4.13. The SUT met all critical calling services requirements.

(8) SIP Translation Requirements for Inter-working AS-SIP Signaling Appliances. The UCR 2008, Change 3, section 5.3.4.14 addresses the AS-SIP-TDM signaling interworking requirements for an LSC. The SUT met this requirement with ANSI T1.619a ISDN PRI NI2 DSN and ISDN PRI NI2 PSTN TDM interfaces interworking with AS-SIP. This requirement was met with both testing and the vendor's LoC.

(9) Relevant Timers for the Terminating Gateway and the Originating Gateway. The UCR 2008, Change 3, section 5.3.4.15, includes the relevant timers for terminating and originating gateways. This requirement applies to gateways between AS-SIP and CCS7 links. CCS7 is a conditional requirement for WAN SSs and LSCs and was not tested.

(10) SIP Requirements for Interworking AS-SIP Signaling Appliances. Interworking AS-SIP signaling appliances MUST comply with UCR 2008, Change 3, section 5.3.4.7.1, AS-SIP Signaling Appliances and AS-SIP EIs, as well as the additional general requirements in UCR 2008, Change 3, section 5.3.4.16. The SUT met this requirement.

(11) Keep-Alive Timer Requirements for Interworking AS-SIP Signaling Appliances. Interworking AS-SIP signaling appliances must comply with UCR 2008, Change 3, section 5.3.4.8, SIP Session Keep-Alive Timer, as well as the additional EI requirements listed in UCR 2008 Change 3 Section 5.3.4.17. The SUT met all keep-alive timer requirements for interworking AS-SIP signaling appliances.

(12) Precedence and Preemption Extensions for Interworking AS-SIP Signaling Appliances. The LSC must meet all requirements for header fields as listed in UCR 2008, Change 3, section 5.3.4.18. The SUT met all requirements for precedence and preemption extensions for interworking AS-SIP signaling appliances.

(13) Supplementary Services. The LSC must meet call flow requirements as described in UCR 2008, Change 3, section 5.3.4.19. The SUT met the requirements for supplementary services.

s. IPv6 Requirements. The UCR 2008, Change 3, section 5.3.5.4, depicts the IPv6 requirements. These requirements were met by the SUT with both testing and the vendor's LoC with the following minor exception. The vendor submitted an LoC which stated the SUT does not properly support the following IPv6 requirements. The SUT does not support all DHCPv6 client messages and options. The SUT does not log all reconfigure events. The SUT SIP Core/Avaya Media Server does not allow disabling of duplicate address detection. DISA has accepted and approved the vendor's POA&M and adjudicated this discrepancy as having a minor operational impact.

t. NM. The Vendor submitted an NM LoC with noted discrepancies.

(1) LSC Management Function. The UCR 2008, Change 3, section 5.3.2.7.2.6, states that the LSC Management function supports functions for LSC FCAPS management and audit logs. The SUT met this requirement with the vendor's LoC.

(2) VVoIP NMS Interface Requirements. The UCR 2008, Change 3, section 5.3.2.4.4, states that the physical interface between the DISA VVoIP EMS and the network components (i.e., LSC, MFSS, EBC, CE Router) is a 10/100-Mbps Ethernet interface. The interface will work in either of the two following modes using auto-negotiation: IEEE, Ethernet Standard 802.3, 1993; or IEEE, Fast Ethernet Standard 802.3u, 1995. The SUT met this requirement for 10/100/1000BaseT interfaces with the vendor's LoC.

(3) General Management Requirements. The UCR 2008, Change 3, section 5.3.2.17.2, states that management of DoD UC Voice and Video services requires each UC product have a minimum of two separate management domains. Typically, one domain will provide local support referred to as Operational Administration and Management (OA&M) and the other domain will provide a remote centralized management capability referred to as NM. WAN SSs and LSCs must be capable of providing the following NM data to the E2E RTS EMS: alarm/log, performance, and accounting. The communication between the WAN SS/LSC and EMS shall be via IP. The WAN SS/LSC shall issue notifications and respond to requests for resource information. The SUT met this requirement with the vendor's LoC.

(4) Requirement for Fault, Configuration, Accounting, Performance, and Security (FCAPS) Management. The UCR 2008, Change 3, section 5.3.2.17.3, states

that the WAN SS and LSC must meet all general requirements for the FCAPS management functional areas. The SUT met this requirement with the vendor's LoC with the minor exceptions listed in the paragraphs below.

(a) The SUT is not fully compliant with following NM call detail records format requirements. The SUT does not provide a voice quality record at the completion of each voice session. DISA has accepted and approved the vendor's POA&M and adjudicated this discrepancy as having a minor operational impact.

(b) The SUT has the ability to send the records over a secure connection. However, the SUT does not have the ability to transfer records to a removable physical storage media. DISA stated their intent to remove this requirement in the next version of the UCR.

(c) Although the SUT supports destination code controls, the SUT does not play the correct announcement to the calling party IAW the reference. DISA has accepted and approved the vendor's POA&M and adjudicated this discrepancy as having a minor operational impact.

(5) NM requirements of Appliance Functions. The UCR 2008, Change 3, section 5.3.2.18.2, states that the WAN SS and LSC must meet all management requirements for ASAC, CCA, SG, and MG functions. The SUT met this requirement with the vendor's LoC.

(6) The UCR 2008, Change 3, section 5.3.2.19, provides a minimum set of requirements to capture basic call information for accounting purposes. Accounting management identifies a set of events during which call detail information is collected. These events are call connect, call attempt, and call disconnect. When these events are detected, specific call data will be provided by the network appliances that were involved in the event. The SUT met this requirement with the vendor's LoC.

11.3 Information Assurance. The IA requirements are tested by an IA test team and the results published in a separate report, Reference (f).

11.4 Other. None.

12. TEST AND ANALYSIS REPORT. No detailed test report was developed in accordance with the Program Manager's request. JITC distributes interoperability information via the JITC Electronic Report Distribution (ERD) system, which uses Unclassified-But-Sensitive Internet Protocol Router Network (NIPRNet) e-mail. More comprehensive interoperability status information is available via the JITC System Tracking Program (STP). The STP is accessible by .mil/gov users on the NIPRNet at https://stp.fhu.disa.mil. Test reports, lessons learned, and related testing documents and references are on the JITC Joint Interoperability Tool (JIT) at http://jit.fhu.disa.mil (NIPRNet). Information related to DSN testing is on the Telecom Switched Services Interoperability (TSSI) website at http://jitc.fhu.disa.mil/tssi. Due to the sensitivity of the

information, the Information Assurance Accreditation Package (IAAP) that contains the approved configuration and deployment guide must be requested directly through government civilian or uniformed military personnel from the Unified Capabilities Certification Office (UCCO), e-mail: disa.meade.ns.list.unified-capabilities-certification-office@mail.mil.All associated data is available on the DISA UCCO website located at http://www.disa.mil/ucco/.

SYSTEM FUNCTIONAL AND CAPABILITY REQUIREMENTS

The Internet Protocol Call Control products have required and conditional features and capabilities that are established by the Unified Capabilities Requirements (UCR). The System Under Test (SUT) need not provide conditional requirements. If they are provided, they must function according to the specified requirements. The detailed Functional requirements (FR) and Capability Requirements for Multi-Function SoftSwitch (MFSS), Local Session Controller (LSC), and Wide Area Network SoftSwitch (WAN SS) are listed in Table 3-1. Detailed Information Assurance (IA) requirements are included in Reference (f) and are not listed below.

Table 3-1. UC Products Capability/Functional Requirements Table

ID	Requirement	UCR Ref (UCR 2008 CH3)	MFSS	LSC	WAN SS
1	As part of the session setup process, the LSC controls what DSCP to use in the subsequent session media stream packets. (two sub requirements)	5.3.2.2.1.4	R	R	NA
2	It is expected that all Assured Services products, such as LSCs and MFSSs, will support vendor-proprietary VVoIP features and capabilities, in addition to supporting the required VVoIP features and capabilities that are listed in Table 5.3.2.2-1, Assured Services Product Features and Capabilities.	5.3.2.2.2.1	R	R	R
3	Call Forwarding when activated on a DN, shall allow any terminating call at a ROUTINE precedence level, to be completed to the designated destination (IAW the call forward options activated), and shall comply with the requirements as stated in Telcordia Technologies GR-217-CORE, GR-580-CORE, and GR-586-CORE.	5.3.2.2.2.1.1	R	R	R
4	Call Forwarding Variable. The CFV feature interacts with MLPP. See Section 5.3.2.2.2.1.1.2.1, Call Forwarding at a Busy Station, for specific MLPP interaction requirements.	5.3.2.2.2.1.1.1.1	R	R	R
5	Call Forward Busy Line. The CFBL feature provides the capability to associate with a given DN—another DN to which calls shall be forwarded when the given DN is busy. This capability applies to DNs within the same business group, within the same UC appliance, or within the network. If this feature is provided, it shall be IAW Telcordia Technologies GR-586-CORE.	5.3.2.2.2.1.1.1.2	R	R	R
6	Call Forwarding - Don't Answer- All Calls. This feature allows calls terminating to an idle EI to ring that EI a customer-specified number of ringing cycles, and if the call is not answered, then route to another EI within the same UC appliance. If the EI to which the call is to be routed is busy, the original EI continues to ring until the originator of the call abandons it or the call is answered. If this feature is provided, it shall be IAW Telcordia Technologies GR-586-CORE.	5.3.2.2.2.1.1.1.3	R	R	R
7	CLASSSM Feature: Selective Call Forwarding. This feature allows customers to have only calls from selected calling parties forwarded. The SCF customer specifies the callers who are to receive special treatment by including their DNs on a screening list. If a call is placed from a DN on the customer's SCF screening list, the call shall be forwarded to the remote station. If this feature is provided, it shall be IAW Telcordia Technologies GR-217-CORE.	5.3.2.2.2.1.1.1.4	C	C	C
8	MLPP Interactions with Call Forwarding. The CF feature is a settable terminating feature that is subscribed to by the called party. This feature shall permit user DNs to direct calls either to another DN or to an attendant. This feature either will be user activated by dialing the appropriate feature code followed by the DN to which calls are to be forwarded or will be assigned by the UC appliance system administrator.	5.3.2.2.2.1.1.2	R	R	R
9	Precedence Call Waiting. The following Precedence Call Waiting (CW) treatment shall apply to precedence levels of PRIORITY and above.	5.3.2.2.2.1.2	R	R	R
10	Precedence Call Diversion. The LSC/MFSS/WAN SS shall provide a global default diversion of all unanswered calls above the ROUTINE precedence to a designated DN (e.g., attendant console), after a specified period, selectable 15–45 seconds and before the voice mail and ACD system diversion.	5.3.2.2.2.1.2.5	R	R	R

Table 3-1. UC Products Capability/Functional Requirements Table (continued)

ID	Requirement	UCR Ref (UCR 2008 CH3)	MFSS	LSC	WAN SS
11	Call Transfer. Two types of call transfers are normal and explicit. A normal call transfer is a transfer of an incoming call to another party. An explicit call transfer happens when both calls are originated by the same subscriber. The UC signaling appliance shall provide the interactions described in the following paragraphs, with both normal and explicit call transfers.	5.3.2.2.2.1.3	R	R	R
12	Call Hold. Call Hold is a function of the serving UC signaling appliance system and shall be invoked by going "on-hook," then "off-hook." Calls on hold shall retain the precedence of the originating call. All DNs are subject to normal preemption procedures.	5.3.2.2.2.1.4	R	R	R
13	UC Audio and Video Conferencing Bridge Requirements can be found in Section 5.3.2.32, UC Audio and Video Conference Bridge Requirements.	5.3.2.2.2.1.5	R	R	R
14	Three-Way-Calling. In TWC, each call shall have its own precedence level. When a three-way conversation is established, each connection shall maintain its assigned precedence level. Each connection of a call resulting from a split operation shall maintain the precedence level that it was assigned upon being added to the three-way conversation.	5.3.2.2.2.1.6	R	R	R
15	Hotline Services. The Hotline Service shall allow an analog subscriber or user to initiate a voice or data call to a predetermined party automatically by going off hook.	5.3.2.2.2.1.7	R	C	R
16	Calling Number Delivery. The calling number provided to the called party shall be determined by the dialing plan used by the calling instrument, IAW Telcordia Technologies GR-31-CORE.	5.3.2.2.2.1.8	R	R	R
17	Calling Name Delivery. The UC products shall also support delivery of Calling Name information to LSC end users (served by PEIs, AEIs, TAs, and IADs; in addition to Calling Number information, which is already delivered) on incoming UC calls.	5.3.2.2.2.1.8.1	C	C	C
18	Calling Party Organization and Location Delivery. Delivery of Calling Party Organization and Location information (e.g., the caller's military unit and location identity) on incoming UC calls from other SSs and LSCs in the UC network is not required currently, because there is no UC network framework defined for this service (i.e., using a Caller Org and Location Database), and there is no AS-SIP protocol defined to carry Caller Org and Location information from one LSC or SS to another. However, it still may be possible to deliver Caller Org and Location information to the called users on UC calls within an individual LSC.	5.3.2.2.2.1.8.2	NA	C	NA
19	Call Pick-up. A user EI is equipped to answer any calls directed to other EI within the user's own preset pick-up group, as established by an administrative facility, by dialing the appropriate feature code.	5.3.2.2.2.1.9	C	C	C
20	Basic Emergency Service (911). The Basic 911 Emergency Service feature provides a three-digit universal telephone number (911) that gives the public direct access to an emergency service bureau. The emergency service is one way only, terminating to the service bureau. A given local switching system shall serve no more than one emergency service bureau.	5.3.2.2.2.2.1	R	R	NA
21	The Tracing of Terminating Calls feature identifies the calling number on intraoffice and interoffice calls terminating to a specified DN. When this feature is activated, the originating DN, the terminating DN, and the time and date are printed out for each call to the specified line.	5.3.2.2.2.2.2	R	R	NA
22	The Outgoing Call Tracing feature allows the tracing of nuisance calls to a specified DN suspected of originating from a given local office. The tracing is activated when the specified DN is entered. A printout of the originating DN, and the time and date, are generated for every call to the specified DN.	5.3.2.2.2.2.3	R	R	NA
23	The Tracing of a Call in Progress feature identifies the originating DN for a call in progress. Authorized personnel entering a request that includes the specific terminating DN involved in the call activate the feature.	5.3.2.2.2.2.4	R	R	NA
24	The Tandem Call Trace feature identifies the incoming trunk of a tandem call to a specified office DN. The feature is activated by entering the specified distant office DN for a tandem call trace. A printout of the incoming trunk number and terminating DN, and the time and date, is generated for every call to the specified DN.	5.3.2.2.2.2.5	R	N	R

Table 3-1. UC Products Capability/Functional Requirements Table (continued)

ID	Requirement	UCR Ref (UCR 2008 CH3)	MFSS	LSC	WAN SS
25	ASAC – Open Loop. This section presents the ASAC requirements for the LSC and the MFSS. In the execution of ASAC, certain procedures need to be followed, such as (a) actions to be taken if a precedence session request cannot be completed because existing sessions are at equal or higher precedence, or (b) tones to be generated when a session is preempted. Section 5.3.2.31.3, Multilevel Precedence and Preemption, addresses these issues. Section 5.3.4, AS-SIP Requirements, provides a more detailed description of the session control signaling requirements of the LSC and the MFSS.	5.3.2.2.2.3	R	R	NA
26	One voice session budget unit shall be equivalent to 110 kbps of access circuit bandwidth independent of the PEI or AEI codec used. This includes ITU-T Recommendation G.711 encoding rate plus IPv6 packet overhead plus ASLAN Ethernet overhead. IPv6 overhead, not IPv4 overhead, is used to determine bandwidth equivalents here.	5.3.2.2.2.3.1	R	R	NA
27	If the MFSS's count of an IPC is greater than or equal to the corresponding IPB, and it receives an INVITE request for a precedence session, the MFSS shall preempt a lower priority session (if such a session exists), and then proceed with processing the higher precedence session connect request.	5.3.2.2.2.3.1.2	R	NA	NA
28	If the MFSS receives a CCA-ID for which there is no entry in ASAC budget table, the SS will reject the session and generate an alarm for the EMS.	5.3.2.2.2.3.1.2	R	NA	NA
29	If necessary, the MFSS will preempt for a session request that is at precedence level FLASH OVERRIDE or FLASH and the counts equal the budgets.	5.3.2.2.2.3.2	R	NA	NA
30	Signaling Protocols. The control/management protocol between the PEI and the LSC is, in general, proprietary. The control/management protocol between the AEI and the LSC is AS-SIP as specified in Section 5.3.4, AS-SIP Requirements, of this document. The signaling protocol used on UC IP trunks is AS-SIP as specified in Section 5.3.4, AS-SIP Requirements, of this document. The TDM-side of an MFSS uses DSN CCS7 signaling on CCS7-like trunks. The LSC and the MG within the MFSS use DSN T1-619a PRI signaling on DSN PRI trunks.	5.3.2.2.3	R	R	NA
31	Registration and authentication between NEs shall follow the requirements set forth in Section 5.4, Information Assurance Requirements.	5.3.2.3.1	R	R	NA
32	The LSCs shall be registered to a primary and backup MFSS. In case of failure of the primary MFSS, the LSC will default to the backup MFSS.	5.3.2.3.2	R	R	NA
33	The LSC shall send an OPTIONS request with a Request-URI identifying the primary SS (the Request-URI does not have a userinfo part) on a configurable periodic time interval (default equals 45 seconds; minimum time interval equals 35 seconds). (4 sub requirements)	5.3.2.3.2.2a	NA	R	NA
34	When a properly functioning primary SS receives the OPTIONS request from a served LSC, the primary SS shall respond with a 200 OK response that includes the Accept header and the Supported header.	5.3.2.3.2.2a	NA	R	NA
35	When the LSC sends a defined configurable number of successive OPTIONS requests (default equals 2) for which there either is no response or the response is a 408 (Request Time-Out), 503 (Service Unavailable), or 504 (Server Time-Out) response, then it must failover to the secondary SS. (3 sub requirements)	5.3.2.3.2.5a.1	NA	R	NA
36	If the LSC receives a 200 OK response to an OPTIONS request from the primary SS before the configurable number of successive failures to the OPTIONS requests (default equals 2) has been reached, then no action is taken to failover to the secondary SS.	5.3.2.3.2.5b	NA	R	NA
37	Whenever an originating SS sends an INVITE request to another SS and receives either a 408 (Request Time-Out), 503 (Service Unavailable), or 504 (Server Time-Out) response and the originating SS is not already awaiting a response to a pending OPTIONS request to the other SS, then the originating SS shall send an OPTIONS request with a Request-URI identifying the SS.	5.3.2.3.2.5b	R	NA	R
38	When a properly functioning SS receives the OPTIONS request, the SS shall respond with a 200 OK response that includes the Accept header and the Supported header.	5.3.2.3.2.5b	R	NA	R
39	Each MFSS (SS) shall be configured with knowledge of each pair of SSs that act as backups for each other. (7 sub requirements)	5.3.2.3.2.5b	R	NA	R

Table 3-1. UC Products Capability/Functional Requirements Table (continued)

ID	Requirement	UCR Ref (UCR 2008 CH3)	MFSS	LSC	WAN SS
40	LSC Failover to Secondary SS Triggered by Primary SS. When the primary sends to a served LSC a defined configurable number of successive OPTIONS requests (default equals 3) for which there either is no response or a response other than 200 OK response (e.g., 408 (Request Time-Out), 500 (Server Internal Error), 503 (Service Unavailable), 504 (Server Time-Out)	5.3.2.3.2.5c	R	R	R
41	LSC Failback to Primary SS Triggered by Primary SS LSC Failover to Secondary SS, step 1.a, upon successful LSC failover to the secondary SS, the LSC waits a configurable amount of time (default equals 30–60 minutes) before sending an OPTIONS request to the primary SS UNLESS the LSC receives an inbound INVITE request from the primary SS	5.3.2.3.2.6a	NA	R	NA
42	LSC Failback to Primary SS Triggered by Primary SS. The primary SS waits a configurable amount of time (default equals 30–60 minutes) before resuming the periodic OPTIONS request to the unreachable LSC.	5.3.2.3.2.6c	NA	R	NA
43	Security Considerations. If the LSC receives a SUBSCRIBE request from an EI that has an Event header with the event type failover, then the LSC shall reject the SUBSCRIBE request with a 403 (Forbidden) response, and the LSC shall NOT forward the SUBSCRIBE to any other signaling platform.	5.3.2.3.2.7	NA	R	NA
44	Internal Interface Requirements. These interfaces are vendor proprietary and unique, especially the protocol used over the interface. Whenever the physical interfaces use IEEE 802.3 Ethernet standards, they shall support auto-negotiation even when the IEEE 802.3 standard has it as optional. This applies to 10/100/1000-T Ethernet standards; i.e., IEEE, Ethernet Standard 802.3, 1993; or IEEE, Fast Ethernet Standard 802.3u, 1995; and IEEE, Gigabit Ethernet Standard 802.3ab, 1999.	5.3.2.4.1	R	R	NA
45	External Physical Interfaces between Network Components. Whenever the physical interfaces use IEEE 802.3 Ethernet standards, they shall support auto-negotiation even when the IEEE 802.3 standard has it as optional. This applies to 10/100/1000-T Ethernet standards; i.e., IEEE, Ethernet Standard 802.3, 1993; or IEEE, Fast Ethernet Standard 802.3u, 1995; and IEEE, Gigabit Ethernet Standard 802.3ab, 1999.	5.3.2.4.2	R	R	NA
46	The physical interface between the DISA VVoIP EMS and the network components (i.e., LSC, MFSS, EBC, CE Router) is a 10/100-Mbps Ethernet interface. The interface will work in either of the two following modes using auto-negotiation: IEEE, Ethernet Standard 802.3, 1993; or IEEE, Fast Ethernet Standard 802.3u, 1995.	5.3.2.4.4	R	R	R
47	Redundant physical Ethernet interfaces are required for signaling and bearer traffic. If the primary signaling and bearer Ethernet interface fails, then traffic shall be switched to the backup signaling and bearer Ethernet interface.	5.3.2.4.4	R	R	R
48	The Assured Services subsystem shall have a hardware/software availability of 0.99999 (nonavailability of no more than 5 minutes per year).	5.3.2.5.2.1	R	R	R
49	The performance parameters associated with the ASLAN, MFSS, and LSC, when combined, shall meet the following maximum downtime requirements: • IP (10/100 Ethernet) network links – 35 minutes/year • IP subscriber – 12 minutes/year	5.3.2.5.2.2	R	R	NA
50	For these VoIP devices, the voice quality shall have a MOS of 4.0 (R-Factor equals 80) or better, as measured in accordance with the E-Model. Additionally, these devices shall not lose two or more consecutive packets in a minute and shall not lose more than seven voice packets (excluding signaling packets) in a 5-minute period.	5.3.2.5.4	R	R	NA
51	IA-Related Quality Factors. The following product quality factors requirements are based on the IA requirements for VVoIP products from Section 5.4, Information Assurance Requirements.	5.3.2.5.5	R	R	NA
52	An IP voice instrument shall be designed in accordance with the acquiring activity requirements, but the following capabilities are specifically required as indicated: • **[Objective]** DoD Common Access Card (CAC) reader • **[Required]** Display calling number • **[Required]** Display precedence level of the session • **[Required]** Support for DHCP.	5.3.2.6.1	R	R	NA
53	Tones and announcements, as required in UCR 2008, Sections 5.2.4.5.2, DSN Information Signals, and Section 5.2.2.1.3, Announcements, shall be supported, except for the loss of C2 announcement.	5.3.2.6.1.1	R	R	R

Table 3-1. UC Products Capability/Functional Requirements Table (continued)

ID	Requirement	UCR Ref (UCR 2008 CH3)	MFSS	LSC	WAN SS
54	The product shall support the origination and termination of a voice session using the following codecs: • ITU-T Recommendation G.711, to include both the µ-law and A-law algorithms • ITU-T Recommendation G.723.1 • ITU-T Recommendation G.729 or G.729A • ITU-T Recommendation G.722.1	5.3.2.6.1.2	R	R	NA
55	Voice over IP PEIs or AEIs (i.e., handset, headset, and hands-free types) shall comply with TIA-810-B, November 3, 2006.	5.3.2.6.1.3	R	R	NA
56	For Fixed-to-Fixed calls, the product shall use 20 ms as the default voice sample length, and as the basis for the voice payload packet size.	5.3.2.6.1.4	R	R	NA
57	The PEI or AEI shall be capable of authenticating itself to its associated LSC and vice versa.	5.3.2.6.1.5 5.3.2.6.2.3	R	R	NA
58	Analog instruments, including secure analog EIs, analog facsimile EIs, and analog modem EIs, shall be supported by the LSC either by a TA or an IAD connected to an Ethernet port.	5.3.2.6.1.6	R	R	NA
59	Video End Instrument. Video EIs are considered associated with the LSC and must have been designed in conjunction with the LSC design. An IP video instrument shall be designed IAW the acquiring activity requirements, but the following capabilities are specifically required as indicated: Automatic enabling of the video camera is not permitted after video session negotiation or acceptance. The called party must take a positive action to enable the camera. Display calling number and Support for DHCP.	5.3.2.6.2	NA	R	NA
60	Display Messages, Tones, and Announcements. Tones and announcements, as appropriate for voice and video over IP, and as required, in Section 5.3.2.6.1.1.1, UC Ringing Tones, Cadences, and Information Signals, and Section 5.3.2.6.1.1.2, Announcements, shall be supported by the PEI and AEI. These tones and announcements may be generated locally by the PEI and AEI, or generated by the LSC or a server connected to the ASLAN, and passed as a media stream to the PEI and AEI.	5.3.2.6.2.1	R	R	NA
61	The LSC shall meet all the requirements for PBAS/ASAC, as appropriate for VoIP and Video over IP services, as specified in UCR 2008, Section 5.2.2, Multilevel Precedence and Preemption.	5.3.2.7.2.1	NA	R	NA
62	The LSC shall support CND, as specified in UCR 2008, Section 5.2.3.2.2.1.8, Calling Number Delivery.	5.3.2.7.2.2	NA	R	NA
63	The LSC must provide signaling on the line side for local intra-enclave subscriber-to-subscriber calls, and trunk-side signaling for calls between an external enclave and a local subscriber.	5.3.2.7.2.3	NA	R	NA
64	In the event that a total loss of connectivity to the DISN WAN occurs, the LSC shall provide the following functions: • Completion of local (intra-enclave) calls • Routing of calls to the PSTN using a local MG (PRI or CAS as required by the local interface) • User look-up of local directory information	5.3.2.7.2.4	NA	R	NA
65	The LSC Management function supports functions for LSC FCAPS management and audit logs. Collectively, these functions are called FCAPS Management and Audit Logs.	5.3.2.7.2.6	NA	R	NA
66	The LSC Transport Interface functions provide interface and connectivity functions with the ASLAN and its IP packet transport network.	5.3.2.7.2.7	NA	R	NA
67	The LSC shall provide an interface to the DISA NMS. The interface consists of a 10/100-Mbps Ethernet connection	5.3.2.7.2.8	NA	R	NA
68	Periodically, the LSC shall verify the status of its registered and authenticated IP EIs, including operator (dial service attendant) consoles. The verification interval shall be configurable with the default set at 5 minutes.	5.3.2.7.2.10	NA	R	NA
69	Line-side custom features must not interfere with the Assured Services requirements.	5.3.2.7.2.11	NA	R	NA
70	During the call establishment process, the product shall be capable of preventing or detecting and stopping hair-pin routing loops over ANSI T1.619a and commercial PRI trunk groups (i.e., T1 PRI and E1 PRI) between a legacy switch (e.g., TDM EO) and an LSC	5.3.2.7.3	NA	R	NA
71	When the AS-SIP TDM Gateway receives a call request over an ISDN MLPP PRI then the AS-SIP TDM Gateway MUST map the telephony numbers received from the Q.931 SETUP message to SIP URIs	5.3.2.7.4.3.3	R	R	NA
72	The AS-SIP TDM Gateway MG MUST support the ITU-T Recommendation G.711 (µ-law and A-law) audio codec.	5.3.2.7.4.3.4	R	R	NA

Table 3-1. UC Products Capability/Functional Requirements Table (continued)

ID	Requirement	UCR Ref (UCR 2008 CH3)	MFSS	LSC	WAN SS
73	The AS-SIP TDM Gateway MG MUST support RFC 4040 and the AS-SIP TDM Gateway MUST support the signaling for establishing the 64kbps unrestricted bearer per Section 5.3.4.7.7, 64 kbps Transparent Calls (Clear Channel).	5.3.2.7.4.3.4	R	R	NA
74	The AS-SIP TDM Gateway MG MUST support ITU-T T.38 Fax Relay.	5.3.2.7.4.3.4	R	R	NA
75	The AS-SIP TDM Gateway MG MUST support the SCIP-216 subset of ITU-T V.150.1 Modem Relay (see Section 5.3.2.21.2, RTS SCIP Gateway Requirements) and the AS-SIP TDM Gateway MUST support the AS-SIP signaling requirements in support of modem relay.	5.3.2.7.4.3.4	R	R	NA
76	The AS-SIP TDM Gateway MUST satisfy the IA requirements in Section 5.4 Information Assurance for a media gateway.	5.3.2.7.4.3.5	R	R	NA
77	The AS-SIP TDM Gateway MUST provide an interface to the DISA NMS. The interface MUST consist of a 10/100-Mbps Ethernet connection	5.3.2.7.4.3.9	R	R	NA
78	The AS-SIP IP Gateway MUST implement call count thresholds for voice sessions and for video sessions in order to perform Session Admission Control (SAC).	5.3.2.7.5.1.1	R	R	NA
79	The requirements for the TDM side of the MFSS are entirely the same as for the DSN MFS specified in UCR 2008, Section 5.2, Circuit-Switched Capabilities and Features. The TDM side of the MFSS must meet these requirements.	5.3.2.8.2.1	R	NA	NA
80	Global Location Server Requirement. The GLS provides global location services and supports call routing where the called address points to a global destination (i.e., outside the MFSS) rather than a local destination (i.e., within the MFSS).A	5.3.2.8.2.2	R	R	R
81	MFSS shall support PRI signaling for TDM communication with other systems.	5.3.2.8.2.3	R	NA	NA
82	The TDM side of the MFSS shall support CCS7 signaling for communication with other TDM systems.	5.3.2.8.2.3	R	NA	NA
83	MFSS shall support AS-SIP signaling for IP communication with other MFSSs and LSCs.	5.3.2.8.2.3	R	NA	NA
84	The MFSS shall provide internal signaling and media conversion for calls between the TDM side and SS side of the MFSS.	5.3.2.8.2.3	R	NA	NA
85	The CCA/SG/MGC/MG complex in the SS side of the MFSS needs to interface and interact with the EO and Tandem functions in the TDM side of the MFSS.	5.3.2.8.2.4	R	NA	NA
86	The MFSS MG must support internal MG connections that interconnect the SS side of the MFSS with the EO and Tandem functions on the TDM side of the MFSS.	5.3.2.8.2.4	R	NA	NA
87	The MFSS MG shall interact with the MFSS MGC so that Internal MG connections between the SS and TDM sides of the MFSS support (1) Intra-MFSS calls between TDM EIs connected to the TDM side, and PEIs/AEIs connected to the SS side of the MFSS (2) Incoming and outgoing calls to/from systems external to the MFSS that require conversion between TDM and IP	5.3.2.8.2.4	R	NA	NA
88	When a U.S. ISDN PRI-based connection is used between the SS and TDM sides of the MFSS, the MFSS MG shall interact with the MFSS MGC so that U.S. ISDN PRI signaling (National ISDN PRI signaling with the Precedence Level IE and related MLPP IEs included) is used between the softswitch and TDM sides, and the T1.619/T1.619a version of the ISDN PRI MLPP feature operates correctly between the SS and TDM sides of the MFSS, for both VoIP-to-TDM calls and TDM-to-VoIP calls over this trunk group.	5.3.2.8.2.4	R	NA	NA
89	The SS side of the MFSS shall meet all the requirements for MLPP, as appropriate for VoIP and Video over IP services, as specified in Section 5.2.2, Multilevel Precedence and Preemption.	5.3.2.8.2.6	R	NA	NA
90	The SS side of the MFSS shall support CND as specified in UCR 2008, Section 5.3.2.2.2.1.8, Calling Number Delivery.	5.3.2.8.2.6	R	NA	NA
91	The requirements for SCS functions (i.e., CCA, IWF, MG, MGC, and SG) and NM are provided in separate sections of this document. The MFSS must meet all these requirements.	5.3.2.8.2.6	R	NA	NA
92	The MFSS shall provide a single, common interface to the DISA NMS. The single interface shall provide access to MFSS features and functions for both the TDM and SS side of the MFSS.	5.3.2.8.3.1	R	NA	NA
93	The MFSS-to-NMS interface shall be an Ethernet connection as specified in Section 5.3.2.4.4, VVoIP NMS Interface Requirements.	5.3.2.8.3.1	R	NA	NA

Table 3-1. UC Products Capability/Functional Requirements Table (continued)

ID	Requirement	UCR Ref (UCR 2008 CH3)	MFSS	LSC	WAN SS
94	WAN-Level Soft switch. The WAN SS is a stand-alone APL product that acts as an AS-SIP B2BUA within the UC framework. It provides the equivalent functionality of a commercial SS and has similar functionality to the SS component of an MFSS.	5.3.2.8.4	NA	NA	R
95	Call Connection Agent. This section provides GRs for the CCA function in the following network appliances: • LSC • MFSS • WAN SS Each of these appliances has a DISN-defined design that includes Session Control and Signaling functions. These functions include both a Signaling Protocol IWF and a Media Gateway Controller function.	5.3.2.9	R	R	R
96	The CCA IWF must support AS-SIP and ISDN PRI protocols.	5.3.2.9.2.1	R	R	NA
97	The MGC within the CCA must control all MGs within the LSC or MFSS, support DoD ISDN trunks, control all signaling and media streams on each trunk within each MG, and accept IP-encapsulated singaling streams from an SG or MG.	5.3.2.9.2.2	R	R	NA
98	The CCA shall be responsible for controlling all the SGs within the MFSS and LSC.	5.3.2.9.2.3	R	C	NA
99	The CCA shall be responsible for controlling each signaling link within each SG within the MFSS or LSC.	5.3.2.9.2.3	R	C	NA
100	The CCA shall be responsible for controlling the DoD CCS7 signaling stream(s) within each signaling link within each SG.	5.3.2.9.2.3	R	C	NA
101	Within the network appliance (i.e., MFSS and LSC), the CCA shall use either an IETF-standard set of CCS7-over-IP protocols, or a supplier-proprietary protocol to accomplish the above SG, signaling link, and signaling stream controls.	5.3.2.9.2.3	R	C	NA
102	The CCA IWF shall support the AS-SIP protocol consistent with the detailed AS-SIP protocol requirements in Section 5.3.4, AS-SIP Requirements.	5.3.2.9.5.1	R	R	NA
103	The CCA IWF shall use the AS-SIP protocol on LSC-MFSS and MFSS-MFSS sessions.	5.3.2.9.5.1	R	R	NA
104	When the CCA IWF uses the AS-SIP protocol over the Access Segment between the EBC and the DISN WAN, or over the DISN WAN itself, the CCA IWF shall secure the AS-SIP protocol using TLS.	5.3.2.9.5.1	R	R	NA
105	CCA-IWF Support for DoD CCS7 via an SG. The CCA IWF shall support the DoD CCS7 protocol, consistent with the detailed DoD CCS7 protocol requirements in the following DoD and ANSI documents: • Section 5.3.2.31.3, Multilevel Precedence and Preemption, including: – Section 5.3.2.31.3.5.3, Common Channel Signaling Number 7 – Section 5.3.2.31.3.10, MLPP CCS7 – Section 5.3.2.31.4.7, Common Channel Signaling Number 7	5.3.2.9.5.2	C	C	NA
106	The CCA IWF shall support the U.S./National ISDN version of the ISDN PRI protocol.	5.3.2.9.5.3	R	R	NA
107	The CCA IWF shall support reception of ISDN PRI messages from the MG and transmission of ISDN PRI messages to the MG.	5.3.2.9.5.3	R	R	NA
108	The CCA IWF shall be able to determine the ISDN PRI (and its D-Channel signaling link) that an incoming PRI message was received on, when processing an incoming PRI message from the MG.	5.3.2.9.5.3	R	R	NA
109	The CCA IWF shall be able to identify the ISDN PRI (and its D-Channel signaling link) that an outgoing PRI message will be sent on, when generating an outgoing PRI message to the MG.	5.3.2.9.5.3	R	R	NA
110	The CCA IWF shall be able to support multiple ISDN PRIs (and their D-Channel signaling links) at the MG, where each PRI is connected to a different PRI end point.	5.3.2.9.5.3	R	R	NA
111	The CCA IWF shall be able to differentiate between the individual ISDN PRIs (and their D-Channel signaling links) at the MG.	5.3.2.9.5.3	R	R	NA
112	The CCA IWF shall support the full set of ISDN MLPP requirements in ANSI T1.619 and ANSI T1.619a.	5.3.2.9.5.3	R	R	NA
113	The CCA IWF shall not support any of the ISDN MLPP requirements in ANSI T1.619 and ANSI T1.619a, on ISDN PRIs to TDM PBXs and switches in the U.S. PSTN.	5.3.2.9.5.3	R	R	NA

Table 3-1. UC Products Capability/Functional Requirements Table (continued)

ID	Requirement	UCR Ref (UCR 2008 CH3)	MFSS	LSC	WAN SS
114	On ISDN PRIs from the CCA/MG to TDM PBXs and switches in allied and coalition partners (where those networks support U.S. "National ISDN" PRI), the CCA IWF shall support a DoD-user-configurable per-PRI option that allows the PRI to support or not support the ANSI T1.619/619a PRI MLPP feature on calls to and from that PRI.	5.3.2.9.5.3	R	R	NA
115	The CCA IWF shall be able to associate individual PRI configuration data with each individual PRI served by the MG and the CCA. The CCA IWF shall not require groups of PRIs served by the MG and the CCA to share "common" PRI configuration data.	5.3.2.9.5.3	R	R	NA
116	The CCA IWF shall support supplier-proprietary Voice and Video EIs and their associated proprietary EI signaling protocols.	5.3.2.9.5.5	R	R	NA
117	The CCA in the LSC, MFSS, and WAN SS shall not allow AS-SIP sessions that have reached the ringing state (i.e., an AS-SIP 180 (Ringing) message or 183 (Session Progress) has been sent from the called party to the calling party, and the calling party is receiving an audible ringing tone) to fail when an internal failure occurs within the CCA.	5.3.2.9.6	R	R	R
118	The MFSS CCA shall be able to support MG connections between the SS side of the MFSS and the EO and Tandem functions on the TDM side of the MFSS.	5.3.2.10.1	R	NA	NA
119	The CCA shall support assignment of the following items to itself: • Only one CCA IP address (this one IP address may be implemented in the CCA as either a single logical IP address or a single physical IP address), • A CCA Fully Qualified Domain Name (FQDN) that maps to that IP address, and • A CCA SIP URI that uses that CCA FQDN as its domain name, and maps to the "SIP B2BUA" function within the CCA itself.	5.3.2.10.3	R	R	NA
120	The CCA shall support assignment of the following items to each SIP and AS-SIP PEI and AEI on the Appliance LAN: • Only one PEI or AEI IP address, • A PEI or AEI FQDN that maps to that IP address, and • A PEI or AEI SIP URI that uses that PEI or AEI FQDN as its domain name, and maps to the "SIP User Agent" function within the PEI or AEI.	5.3.2.10.3	R	R	NA
121	The CCA shall support assignment of the following items to each MG on the Appliance LAN: • Only one MG IP address (this one IP address may be implemented in the MG as either a single logical IP address or a single physical IP address), • An MG FQDN that maps to that IP address, and • An MG SIP URI that uses that MG FQDN as its domain name, and maps to the "UC Signaling and Media End Point" function within the MG.	5.3.2.10.3	R	R	NA
122	The CCA shall support assignment of the following items to each SG on the Appliance LAN: • Only one SG IP address (this one IP address may be implemented in the SG as either a single logical IP address or a single physical IP address), • An SG FQDN that maps to that IP address, and • An SG SIP URI that uses that SG FQDN as its domain name, and maps to the "UC Signaling End Point" function within the SG	5.3.2.10.3	R	C	NA
123	The CCA shall support assignment of the following items to the EBC: • Only one EBC IP address (this one IP address may be implemented in the EBC as either a single logical IP address or a single physical IP address), • An EBC FQDN that maps to that IP address, and • An EBC SIP URI that uses that EBC FQDN as its domain name, and maps to the "SIP B2BUA" function within the EBC.	5.3.2.10.3	R	R	NA
124	When directing VoIP sessions to other network appliances providing voice and video services across the DISN, the CCA shall direct these VoIP sessions to the EBC, so that the EBC can process them before directing them to the network appliances on the DISN WAN.	5.3.2.10.4	R	R	NA
125	When accepting VoIP sessions from other network appliances on the DISN, the CCA shall accept these VoIP sessions from the EBC, because the EBC relays them from the network appliances on the DISN WAN.	5.3.2.10.4	R	R	NA
126	The LSC and MFSS CCA shall meet all the requirements in Section 5.3.2.2.2.3, ASAC – Open Loop. The LSC and MFSS CCA shall meet all the requirements in Section 5.3.4.10, Precedence and Preemption. The LSC and MFSS CCA shall meet all the requirements in Section 5.3.4.11, Policing of Call Count Thresholds.	5.3.2.10.5	R	R	NA

Table 3-1. UC Products Capability/Functional Requirements Table (continued)

ID	Requirement	UCR Ref (UCR 2008 CH3)	MFSS	LSC	WAN SS
127	The CCA shall generate a redirecting number each time it forwards a VoIP or Video session request as part of a Call Forwarding feature.	5.3.2.10.6	R	R	NA
128	The CCA shall relay received SIP and TLS authentication credentials and encryption key information from sending end systems (i.e., users, PEIs, AEIs, and EBCs) to the Information Assurance function to support the Information Assurance function's user, PEI, AEI, and EBC authentication capabilities, and its PEI, AEI, and EBC signaling stream encryption capabilities.	5.3.2.10.7	R	R	NA
129	The CCA MGC shall relay received H.248 and IPSec (or proprietary-protocol-equivalent) authentication credentials and encryption key information from sending end systems (i.e., MGs and SGs) to the Information Assurance function to support the Information Assurance function's MG and SG authentication capabilities, and its MG and SG signaling stream encryption capabilities.	5.3.2.10.7	R	R	NA
130	The CCA shall relay authentication credentials received in a SIP or AS-SIP REGISTER message from an PEI, AEI, or EBC to the Information Assurance function.	5.3.2.10.7	R	R	NA
131	The CCA shall relay TLS encryption key information received from a PEI or AEI to the Information Assurance function so the Information Assurance function can verify that this encryption key information can be used on the signaling streams for Voice or Video sessions to/from that PEI or AEI.	5.3.2.10.7	R	R	NA
132	The CCA shall relay TLS encryption key information received from an EBC to the Information Assurance function so the Information Assurance function can verify that this encryption key information can be used on the signaling streams for the Voice or Video sessions to/from that EBC.	5.3.2.10.7	R	R	NA
133	The CCA within the appliance shall support all Information Assurance Appliance requirements in Section 5.4, Information Assurance Requirements, which involve the appliance's SCS functions and the appliance's MGC.	5.3.2.10.7	R	R	NA
134	The CCA shall support supplier-proprietary Voice and Video EIs, using EI-CCA protocols that are proprietary to the LSC or MFSS supplier.	5.3.2.10.10	R	R	NA
135	When the CCA IWF supports AS-SIP Voice and Video AEIs, the IWF shall support these AEIs using the set of AS-SIP protocol requirements in Section 5.3.2.22, Generic AS-SIP End Instrument and Video Codec Requirements, and Section 5.3.4, AS-SIP Requirements.	5.3.2.10.10	R	R	NA
136	The Appliance CCA (i.e., LSC or MFSS) shall support both assured Voice and Video services. The CCA shall support both assured Voice and assured Video sessions, and shall support these sessions from both VoIP EIs and Video EIs, as described in UCR 2008, Section 5.3.2.10.10, CCA Interactions with End Instrument(s).	5.3.2.10.11	R	R	NA
137	The Appliance CCA shall support common procedures and protocol for VoIP and Video session control.	5.3.2.10.11	R	R	NA
138	The Appliance CCA shall support common procedures and protocol for feature control, for the features and capabilities given in Table 5.3.2.2-1, Assured Services Product Features and Capabilities.	5.3.2.10.11	R	R	NA
139	On calls to and from Proprietary VoIP and Proprietary Video EIs, the CCA shall use the appropriate parameters within the appliance supplier's Proprietary protocol messages to differentiate Proprietary VoIP sessions from Proprietary Video sessions.	5.3.2.10.11	R	R	NA
140	When AS-SIP EIs are supported on calls to and from AS-SIP EIs, the CCA shall use the SDP message bodies in AS-SIP INVITE, UPDATE, REFER, and ACK messages, as well as the SDP message bodies in AS-SIP 200 OK responses and earlier 1xx provisional responses, to differentiate AS-SIP Voice sessions from AS-SIP Video sessions.	5.3.2.10.11	R	R	NA
141	The CCA shall track VoIP sessions against corresponding Appliance VoIP budgets, and shall separately track Video sessions against corresponding Video budgets. The CCA shall maintain the Appliance's VoIP budgets separate from the Appliance's Video budget.	5.3.2.10.11	R	R	NA
142	As part of LSC-Level ASAC and WAN-Level ASAC Policing, the CCA shall support PBAS/ASAC for both VoIP sessions and Video sessions.	5.3.2.10.11	R	R	NA
143	The CCA shall allow an individual EI to support both VoIP and Video sessions. The CCA shall allow an individual EI to have both VoIP and Video sessions active at the same time.	5.3.2.10.11	R	R	R

Table 3-1. UC Products Capability/Functional Requirements Table (continued)

ID	Requirement	UCR Ref (UCR 2008 CH3)	MFSS	LSC	WAN SS
144	The CCA shall support the routing of both VoIP and Video session requests from LSCs to MFSSs, from MFSSs to LSCs, and from MFSSs to MFSSs, using AS-SIP. The CCA shall direct outgoing VoIP and Video session requests to EBCs, and shall accept incoming VoIP and Video session requests from EBCs, consistent with this LSC-to-MFSS routing, MFSS-to-LSC routing, and MFSS-to-MFSS routing.	5.3.2.10.11	R	R	NA
145	The CCA shall support the ability to remove VoIP and Video sessions and session requests from the media server so the CCA can continue with necessary session processing once the media server has completed its functions.	5.3.2.10.12	R	R	NA
146	The MG supports interconnection of VoIP, FoIP, and MoIP media streams with the following LSC functions and end-user devices: a. The LSC media server, which provides tones and announcements for LSC calls and LSC features b. AS-SIP VoIP, FoIP, and MoIP AEIs on the LSC	5.3.2.12.3.1	NA	R	NA
147	The MFSS MG shall be able to support MG trunk groups (referred to as internal MG connections) that either interconnect the SS (VoIP) side of the MFSS with the EO or Tandem functions on the TDM side of the MFSS.	5.3.2.12.3.2.1	R	NA	NA
148	On incoming call requests to a TDM trunk group, where the CCA/MGC applies a CAC Call Denial treatment to that call request, the MG shall connect the TDM called party on the incoming call request to the appropriate CAC Call Denial tone or announcement when instructed to do so by the MGC.	5.3.2.12.4.1.1	R	R	NA
149	On incoming calls or call requests to a TDM trunk group, where the CCA/MGC applies an ASAC Call Preemption treatment to that call or call request, the MG shall connect the TDM calling party on the incoming call or call request to the appropriate ASAC Call Preemption tone or announcement when instructed to do so by the MGC.	5.3.2.12.4.1.1	R	R	NA
150	On outgoing calls or call requests from a TDM trunk group, where the CCA/MGC applies an ASAC Call Preemption treatment to that call or call request, the MG shall connect the TDM called party on the outgoing call or call request to the appropriate ASAC Call Preemption tone or announcement when instructed to do so by the MGC.	5.3.2.12.4.1.1	R	R	NA
151	MG Call Preemption Treatments to Support ASAC. On incoming calls or call requests to a TDM trunk group, where the CCA/MGC applies an ASAC Call Preemption treatment to that call or call request, the MG shall connect the TDM calling party on the incoming call or call request to the appropriate ASAC Call Preemption tone or announcement when instructed to do so by the MGC. On outgoing calls or call requests from a TDM trunk group, where the CCA/MGC applies an ASAC Call Preemption treatment to that call or call request, the MG shall connect the TDM called party on the outgoing call or call request to the appropriate ASAC Call Preemption tone or announcement when instructed to do so by the MGC.	5.3.2.12.4.1.2	R	R	NA
152	Each MG within an appliance shall support all the appliance requirements in Section 5.4, Information Assurance Requirements, that involve an Appliance MG.	5.3.2.12.4.2	R	R	NA
153	When instructed to do so by the MGC, the MG shall direct TDM calls and call requests to the media server.	5.3.2.12.4.3	R	R	NA
154	Since each Appliance MG is an IP endpoint on the Appliance LAN, each MG shall support assignment of the following items to itself: • Only one MG IP address (This one IP address may be implemented in the CCA as either a single logical IP address or a single physical IP address.) • An MG FQDN that maps to that IP address • An MG SIP URI that uses that MG FQDN as its domain name, and maps to a “SIP User Agent” function within the MG.	5.3.2.12.4.4	R	R	NA
155	The MG shall interact with the Transport Interface functions in the appliances when the MG uses the native LAN protocols, IP, and UDP to exchange SRTP media streams with PEIs, AEIs, other MGs, and the EBC over the Appliance LAN.	5.3.2.12.4.4	R	R	NA
156	When sending VoIP media streams to PEIs or AEIs and MGs served by other network appliances, the MG shall direct these VoIP media streams to the EBC so the EBC can process them before sending them on to the remote PEIs or AEIs and MGs via the DISN WAN.	5.3.2.12.4.5	R	R	NA

Table 3-1. UC Products Capability/Functional Requirements Table (continued)

ID	Requirement	UCR Ref (UCR 2008 CH3)	MFSS	LSC	WAN SS
157	When accepting VoIP media streams from PEIs or AEIs and MGs served by other network appliances, the MG shall accept these VoIP media streams from the appliance EBC, because the EBC relays them from the DISN WAN and the remote PEIs or AEIs and MGs on the DISN WAN. The MG shall recognize and act on the network-level IP addresses of the remote PEIs or AEIs and MGs, when accepting the VoIP sessions through the EBC from the DISN WAN and the remote PEIs or AEIs and MGs.	5.3.2.12.4.5	R	R	NA
158	The MG shall support the exchange of VoIP media streams with the following voice PEIs and AEIs both on the local appliance and on remote network appliances: a. Supplier-proprietary voice PEIs b. Voice SIP EIs, when the appliance supplier supports these EIs c. Voice H.323 EIs, when the appliance supplier supports these EIs d. Voice AS-SIP AEIs	5.3.2.12.4.8	R	R	NA
159	The MG shall support the operation of the following features for VoIP and Video end users, consistent with the operation of this feature on analog and ISDN lines in DoD TDM switches today: • Call Hold • Music on Hold • Call Waiting • Precedence Call Waiting • Call Forwarding Variable • Call Forwarding Busy Line • Call Forwarding No Answer • Call Transfer • Three-Way Calling • Hotline Service • Calling Party and Called Party ID (number only) • Call Pickup	5.3.2.12.4.9	R	R	NA
160	Each appliance MG shall support TDM trunk groups that can interconnect with the following NEs in DoD networks, in the United States and worldwide: • PBXs • SMEOs • EOs • MFSs Media Gateway support for these TDM trunk groups shall be identical to the support for these trunk groups in DoD TDM PBXs, EOs, Tandem switches, and MFSs today, as specified in UCR 2008, Section 5.2, Circuit-Switched Capabilities and Features.	5.3.2.12.5	R	R	NA
161	MG Interfaces to TDM NEs in Allied and Coalition Partner Networks. The MG shall support foreign country ISDN PRI trunk groups where the MG handles both the media channels and the signaling channel as follows: 1. For interconnection with an allied or coalition partner network, using foreign ISDN PRI from the network of the allied or coalition partner. 2. Support for MLPP using ISDN PRI, per ITU-T Recommendation Q.955.3, is required on LSC trunk groups when these trunk groups are used to connect to an allied or coalition partner from a U.S. OCONUS ETSI-compliant country.	5.3.2.12.6	R	R	NA
162	Each appliance MG shall support TDM trunk groups that can interconnect with NEs in the PSTN in the United States, including CONUS, Alaska, Hawaii, and U.S. Caribbean and Pacific Territories. Media Gateway support for these TDM trunk groups to the U.S. PSTN shall be identical to the support for these trunk groups in DoD TDM PBXs, EOs, Tandem Switches, and MFSs today, as specified in UCR 2008, Section 5.2, Circuit-Switched Capabilities and Features.	5.3.2.12.7	R	R	NA
163	The MG shall support foreign country ISDN PRI, where the MG handles both the media channels and the signaling channel: 1. For interconnection with a foreign country PSTN using foreign country ISDN PRI, from the country where the DoD user's B/P/C/S is located. 2. Support for ETSI PRI is required on LSC trunk groups when the LSC is used in OCONUS ETSI-compliant countries. 3. Support for ETSI PRI is required on MFSS trunk groups when the MFSS is used in OCONUS ETSI-compliant countries. 4. Support for MLPP using ISDN PRI is not required on the above trunk groups.	5.3.2.12.8	R	R	NA

Table 3-1. UC Products Capability/Functional Requirements Table (continued)

ID	Requirement	UCR Ref (UCR 2008 CH3)	MFSS	LSC	WAN SS
164	The MG shall support ISDN PRI trunk groups that carry the U.S./National ISDN version of the ISDN PRI protocol. The MG shall support these U.S. PRI trunk groups conformant with the detailed U.S. ISDN PRI requirements.	5.3.2.12.10	R	R	NA
165	The MG shall support multiple U.S. PRI trunk groups based on the needs of the DoD user deploying the appliance. The MG shall allow each U.S. PRI trunk group at the MG to connect to: TDM EO and tandem components of the local MFSS; a different U.S. PSTN TDM NE (e.g., PBX, TDM switch); a different DoD TDM NE (e.g., PBX, TDM switch); or a different DoD IP NE (e.g., LSC, MFSS), based on the interconnection needs of the DoD user.	5.3.2.12.10	R	R	NA
166	The MG shall support reception of ISDN PRI messages from the CCA MGC and transmission of ISDN PRI messages to the CCA MGC.	5.3.2.12.10	R	R	NA
167	The MG shall connect to the ASLAN of the appliance using the physical layer and data link layer protocols of the ASLAN. In this case, the MG shall appear to the MGC, EBC, and appliance PEIs/AEIs as a physical layer and data link layer endpoint on a LAN switch in the ASLAN.	5.3.2.12.12.1	R	R	NA
168	The MG shall connect to the ASLAN of the appliance using the IP as a Network Layer Protocol. In this case, the MG shall appear to the MGC, EBC, and appliance PEIs/AEIs as an IP endpoint on an IP router on the ASLAN.	5.3.2.12.12.2	R	R	NA
169	The MG shall support IPv4 as a Network Layer Protocol. The MG shall also support IPv6 as a Network Layer Protocol.	5.3.2.12.12.2	R	R	NA
170	Conformant with Section 5.3.5, IPv6 Requirements, the MG shall support dual IPv4 and IPv6 stacks (i.e., support both IPv4 and IPv6 in the same IP end point) as described in RFC 4213.	5.3.2.12.12.2	R	R	NA
171	The MG shall support exchange of VoIP media streams with appliance PEIs/AEIs, other appliance MGs, and the appliance EBC (and through the appliance EBC, with other PEIs/AEIs and MGs on other network appliances) using the following IETF-defined Media Transfer Protocols: • SRTP, conformant with RFC 3711 • SRTCP, conformant with RFC 3711	5.3.2.12.12.4	R	R	NA
172	The MG shall secure all VoIP media streams exchanged with appliance PEIs/AEIs, other appliance MGs, and the appliance EBC (and through the EBC, with PEIs/AEIs and MGs on other network appliances) using SRTP and SRTCP.	5.3.2.12.12.4	R	R	NA
173	The MG shall use UDP as the underlying Transport Layer Protocol, and IP as the underlying Network Layer Protocol, when SRTP is used for media stream exchange.	5.3.2.12.12.4	R	R	NA
174	When the VoIP signaling streams contain supplier-proprietary protocol messages instead of H.248 or ISDN PRI messages, the MG shall secure the proprietary protocol message exchange with the MGC using mechanisms that are as strong as, or stronger than, the use of IPSec to secure H.248 and PRI message exchange.	5.3.2.12.12.5	R	R	NA
175	MG Support for VoIP Interworking for ISDN PRI Trunks. When an MG interworks a TDM call from an ISDN PRI trunk group with a VoIP session within the network appliance, the MG shall perform the following: 1. Convert between the ISDN media stream on the ISDN PRI B-Channel and the VoIP SRTP/Transport Layer/IP media stream within the appliance.	5.3.2.12.12.6	R	R	NA
176	The MG shall support TDM voice streams using the following: • ITU-T 64 kbps G.711 μ-law PCM over digital trunks • ITU-T 64 kbps G.711 A-law PCM over digital trunks • North American 56 kbps G.711 μ-law PCM over digital trunks • North American analog voice transmission over analog trunks on TDM trunk groups on the TDM side of the MG	5.3.2.12.12.8	R	R	NA
177	The MG shall convert between North American 56 kbps G.711 μ-law PCM and ITU-T 64 kbps G.711 μ-law PCM in cases where North American 56 kbps TDM voice trunks are used on the TDM side of the MG.	5.3.2.12.12.8	R	R	NA
178	The MG shall convert between North American analog voice transmission and ITU-T 64 kbps G.711 μ-law PCM in cases where North American analog voice trunks are used on the TDM side of the MG.	5.3.2.12.12.8	R	R	NA
179	The MG shall support uncompressed, packetized VoIP streams using ITU-T Recommendation G.711 μ-law PCM and ITU-T Recommendation G.711 A-law PCM (ITU-T Recommendation G.711, November 1998, plus Appendix I, September 1999, and Appendix II, September 2000) over the IP network on the VoIP side of the MG.	5.3.2.12.12.8.1	R	R	NA

Table 3-1. UC Products Capability/Functional Requirements Table (continued)

ID	Requirement	UCR Ref (UCR 2008 CH3)	MFSS	LSC	WAN SS
180	The MG shall packetize/depacketize G.711 media streams received or sent between its TDM side and its VoIP side.	5.3.2.12.12.8.1	R	R	NA
181	The MG shall transport each packetized G.711 VoIP stream to and from the destination local PEI, local AEI, local MG, remote PEI (via an EBC), remote AEI (via an EBC), or remote MG (via an EBC) using SRTP, UDP, and IP protocol layers on the VoIP side of the MG.	5.3.2.12.12.8.1	R	R	NA
182	The MG shall support the use of uncompressed, packetized G.711 µ-law and A-law VoIP media streams for both Fixed and Deployable applications.	5.3.2.12.12.8.1	R	R	NA
183	Support for Compressed, Packetized VoIP per ITU-T Recommendation G.72x. The MG shall use internal G.723.1 and G.729 codecs to perform this compression and decompression. These compressed VoIP codecs are referred to collectively as G.72x in this section. The MG shall use these internal codecs to 1) compress G.711 TDM media to G.72x VoIP media, for media transfer in the TDM-to-IP direction, and 2) decompress G.72x VoIP media to G.711 TDM media, for media transfer in the IP-to-TDM direction.	5.3.2.12.12.8.2	R	R	NA
184	MG Support for Group 3 Fax Calls. The MG shall support Group 3 Facsimile (G3 Fax) calls between TDM trunk-side interfaces on the MG, PEIs, AEIs, TAs, IADs, TDM line-side interfaces on the MG, and EBCs.	5.3.2.12.12.9	R	R	NA
185	MG Option to "Handle FoIP Calls as G.711 VoIP Calls" (Fax Passthrough Calls). When the MG is configured to "Handle FoIP calls as G.711 VoIP Calls," the MG shall support the use of uncompressed, packetized G.711 µ-law and A-law FoIP media streams for both Fixed and Deployable applications.	5.3.2.12.12.9.1	R	R	NA
186	MG Option to "Handle FoIP Calls as T.38 FoIP Calls" (Fax Relay Calls). When the MG is configured to "Handle FoIP Calls as T.38 FoIP Calls," the MG shall not handle FoIP calls within the appliance in the same way it handles G.711 VoIP calls within the appliance. Instead, upon detection that a VoIP call request is actually a FoIP call request, the MG shall direct the FoIP call request to a "T.38 Fax Server" that is internal to the appliance.	5.3.2.12.12.9.2	R	R	NA
187	MG Support for ISDN over IP Calls and 64-kbps Clear Channel Data Streams. The MG is expected to support ISDN over IP calls and 64 kbps unrestricted digital information (i.e., 64-kbps Clear Channel Data) streams from ISDN interfaces, in addition to the other types of voice streams (i.e., FoIP, MoIP, SCIP over IP) described in the previous sections.	5.3.2.12.12.12	R	R	NA
188	MG Support for "Hairpinned" MG Calls The MG shall support VoIP sessions between trunks on the same MG, including all combinations of TDM call legs and VoIP media end points. In the TDM-to-TDM sessions, the MG shall not establish any IP, UDP/TCP/SCTP, RTP, or VoIP codec communication between the "call-originating" and "call-terminating" side of the MG. In addition, the MG shall not establish any TDM-to-VoIP media conversion, or VoIP-to-TDM media conversion, on either side of the MG, for either direction of media transmission.	5.3.2.12.12.13	R	R	NA
189	MG Support for Multiple Codecs for a Given Session. The MG shall derive its clock timing from a designated T1 or PRI interface.	5.3.2.12.12.14	R	R	NA
190	The MG shall provide an EC capability with an echo path capacity (echo tail length) of at least 64 ms.	5.3.2.12.13.2.2	R	R	NA
191	The MG shall provide echo cancellation for voice, G3 Fax, and VBD modem fax calls.	5.3.2.12.13.2.2	R	R	NA
192	Each MG EC shall be equipped with an "echo canceller disabling signal" tone detector. This tone detector shall detect and respond to an in-band EC disabling signal from an end user's G3 Fax or VBD modem device. The EC disabling signal detected shall consist of a 2100-Hz tone with periodic phase reversals inserted in that tone.	5.3.2.12.13.2.2	R	R	NA
193	The MG tone detector/EC disabler shall detect the "echo canceller disabling signal" and disable the MG EC when, and only when, that signal is present for G3 Fax or VBD modem.	5.3.2.12.13.2.2	R	R	NA
194	The MG shall derive its clock timing from a designated T1 or PRI interface.	5.3.2.12.14	R	R	NA
195	The MGC within the CCA shall be responsible for controlling all the MGs within the LSC or MFSS.	5.3.2.12.15	R	R	NA
196	The MGC within the CCA shall be responsible for controlling all the trunks (i.e., DoD CCS7, PRI, or CAS) within each MG within the LSC or MFSS.	5.3.2.12.15	R	R	NA
197	The MGC within the CCA shall be responsible for controlling all media streams on each trunk within each MG.	5.3.2.12.15	R	R	NA

Table 3-1. UC Products Capability/Functional Requirements Table (continued)

ID	Requirement	UCR Ref (UCR 2008 CH3)	MFSS	LSC	WAN SS
198	The MGC within the CCA shall accept IP signaling streams from an MG, conveying received PRI or CAS trunk signaling. The MGC shall return IP signaling streams to the MG accordingly, for conversion to transmitted PRI or CAS trunk signaling.	5.3.2.12.15	R	R	NA
199	Within the appliance (i.e., LSC or MFSS), the MGC shall use either ITU-T Recommendation H.248 (Gateway Control Protocol Version 3) or a supplier-proprietary protocol to accomplish the MG, trunk, and media stream controls described previously.	5.3.2.12.15	R	R	NA
200	MGC and IWF Treatments for PRI-to-AS-SIP Mapping for TDM MLPP. In conjunction with the IWF, the MGC shall support the following mapping of PRI-signaled MLPP information to AS-SIP-signaled RPH information on calls or sessions that involve TDM MLPP and PRI/AS-SIP interworking.	5.3.2.12.15.5	R	R	NA
201	MGC Support for MG-to-MG Calls. The MGC shall be able to support multiple MGs. The MGC shall support VoIP sessions between trunk/line cards on the same or different MGs of the MGC, without requiring them to route to a VoIP EI on the appliance, or requiring them to be routed through the appliance's EBC to the DISN WAN or MG-to-MG sessions where a single MG is involved, the MGC shall handle MG-to-MG calls within a single MG as TDM-to-TDM calls that are local to the MG, rather than as TDM-to-VoIP-to-TDM calls that use VoIP resources within the MG and other appliance components. In this case, the MGC shall instruct the MG to connect the TDM media locally from the one TDM leg of the call, to the TDM media from the other TDM leg of the call, for both directions of TDM media transmission.	5.3.2.12.15.6	R	R	NA
202	Whenever the MG uses ITU-T Recommendation V.150.1, the following applies: ITU-T Recommendation V.150.1 provides for three states: audio, VBD, and modem relay. After call setup, inband signaling may be used to transition from one state to another. In addition, V.150.1 provides for the transition to FoIP using Fax Relay per ITU-T Recommendation T.38.	5.3.2.12.16	R	R	NA
203	The LSC MG, MFSS MG, and WAN SS MG shall not allow AS-SIP sessions that have reached the ringing state (i.e., an AS-SIP 180 (Ringing) message or 183 (Session Progress) has been sent from the called party to the calling party, and the calling party is receiving an audible ringing tone) to fail when an internal failure occurs within that MG.	5.3.2.12.17	R	R	R
204	The precedence level and dialed number input to the PEI or AEI shall be as specified in UCR 2008, Section 5.2.3.5.1.2, Interswitch and Intraswitch Dialing.	5.3.2.16	R	R	R
205	The DSN Worldwide Numbering and Dialing Plan will be used as the addressing schema within the current DSN and its migration into the SIP environment.	5.3.2.16.1	R	R	R
206	The CCA shall allow session requests from LSC, MFSS EIs, other appliances, and MFSS MGs to contain • Called addresses including DSN numbers from the DSN numbering plan • Called addresses including E.164 numbers from the E.164 numbering plan	5.3.2.16.1	R	R	R
207	When a session request's called address includes a DSN number from the DSN numbering plan, the CCA shall determine whether the called DSN number is local to the LSC or MFSS, or external to the LSC or MFSS.	5.3.2.16.1	R	R	R
208	When a session request's called address includes an E.164 number from the E.164 numbering plan, the CCA shall determine whether the called E.164 number is local to the LSC or MFSS, or external to the LSC or MFSS.	5.3.2.16.1	R	R	R
209	The access code shall include the access digit, followed by the precedence digit or the service digit.	5.3.2.16.1	R	R	R
210	The access digit (e.g., 9) shall provide the indication to the LSC/MFSS that the following digits will indicate either UC call precedence, selected egress to the services of other systems or networks, or selected access to special UC features, such as individual trunk tests.	5.3.2.16.1	R	R	R
211	The precedence digit (0, 1, 2, 3, or 4) shall permit a UC user to dial an authorized UC precedence level from properly classmarked 12-button telephone instruments. When the 7-digit intraLSC dialing option is used, it is not necessary to dial or key the precedence access digit for ROUTINE precedence calls. The assignment of precedence digits is shown in Table 5.3.2.16-4, Precedence and Service Access.	5.3.2.16.1	R	R	R

Table 3-1. UC Products Capability/Functional Requirements Table (continued)

ID	Requirement	UCR Ref (UCR 2008 CH3)	MFSS	LSC	WAN SS
212	The service digits, 5 through 9, shall provide information to the LSC/MFSS to connect calls to Government or public telephone services or networks that are not part of the UC. The UC LSC/MFSS will collect the access code and all routing and address digits before attempting to route a call to prevent numbering ambiguities between the access codes and the 2-digit abbreviated dial codes. The assignment of service access codes is shown in Table 5.3.2.16-4, Precedence and Service Access.	5.3.2.16.1	R	R	R
213	The CCA shall allow each VoIP and Video PEI and AEI served by an LSC or MFSS to have both a DSN number assigned and an E.164 number assigned.	5.3.2.16.1.1	R	R	NA
214	For VoIP and Video PEIs or AEIs that have both a DSN number and an E.164 number assigned, the CCA shall be able to match each PEI's or AEI's DSN number with its E.164 number, and to match each PEI's or AEI's E.164 number with its DSN number.	5.3.2.16.1.1	R	R	NA
215	The CCA shall be able to distinguish DSN called numbers from E.164 called numbers when processing VoIP and Video session requests from PEIs, AEIs, EBCs, MG line cards, and MG trunk groups.	5.3.2.16.1.2	R	R	NA
216	The CCA shall be able to distinguish local [DSN or E.164] called numbers from external [DSN or E.164] called numbers when processing VoIP and Video session requests from PEIs, AEIs, EBCs, MG line cards, and MG trunk groups.	5.3.2.16.1.2	R	R	NA
217	The MFSS or LSC is only required to support one network FQDN for use with SIP URI domain names: "uc.mil" if that appliance is used for SBU traffic, and "cuc.mil" if that appliance is used for classified traffic.	5.3.2.16.1.4.1	R	R	NA
218	The MFSS or LSC is required to ensure that all AS-SIP session requests entering or leaving that appliance use the network FQDN of that appliance (i.e., "uc.mil" for SBU traffic, or "cuc.mil" for Classified traffic) as the domain name in called SIP URIs.	5.3.2.16.1.4.1	R	R	NA
219	All voice systems, TDM or IP technology-based, must contain subscriber assignment information.	5.3.2.16.1.5	R	R	NA
220	LSCs and SSs must be capable of providing the following NM data to the E2E RTS EMS: • Alarm/log data • Performance data (e.g., traffic data) • Accounting data (e.g., call detail recording)	5.3.2.17.2	R	R	R
221	LSCs and SSs must allow the E2E RTS EMS to have access to perform LSC/SS datafill administration and network controls.	5.3.2.17.2	R	R	R
222	Communications between VVoIP EMS and the VVoIP network appliances shall be via IP.	5.3.2.17.2	R	R	R
223	A network appliance shall issue state change notifications for changes in the states of replaceable components, including changes in operational state or service status, and detection of new components.	5.3.2.17.2	R	R	R
224	A network appliance shall be provisioned by the VVoIP EMS with the address and Transport Layer port information associated with its Core Network interfaces.	5.3.2.17.2	R	R	R
225	A network appliance shall be capable of maintaining and responding to VVoIP EMS requests for resource inventory, configuration, and status information concerning Core Network interface resources (e.g., IP or MAC addresses) that have been installed and placed into service.	5.3.2.17.2	R	R	R
226	A network appliance shall be capable of setting the Administrative state and maintaining the Operational state of each Core Network interface, and maintaining the time of the last state change.	5.3.2.17.2	R	R	R
227	Alarm messages must be distinguishable from administrative log messages.	5.3.2.17.3.1.1	R	R	R
228	The NEs shall detect their own fault (alarm) conditions.	5.3.2.17.3.1.2	R	R	R
229	The NEs shall generate alarm notifications.	5.3.2.17.3.1.3	R	R	R
230	The network elements shall send the alarm messages in NRT. More than 99.95 percent of alarms shall be detected and reported in NRT. Near Real Time is defined as event detection and alarm reporting within 5 seconds of the event, excluding transport time.	5.3.2.17.3.1.4	R	R	R
231	The network components shall send alarm messages in SNMPv3 format.	5.3.2.17.3.1.5	R	R	R
232	Capability to access and modify configuration data by the VVoIP EMS shall be controllable by using an access privileges function within the network appliance.	5.3.2.17.3.2.1	R	R	R

Table 3-1. UC Products Capability/Functional Requirements Table (continued)

ID	Requirement	UCR Ref (UCR 2008 CH3)	MFSS	LSC	WAN SS
233	The VVoIP NEs shall be able to receive and respond to remote NM commands.	5.3.2.17.3.4.2	R	R	R
234	When ASAC budgets are reduced, by NM action, below the current budget allocation, any previous sessions (regardless of precedence level) in excess of the new budget shall be allowed to terminate naturally. This assumes that the CE Router queue bandwidths would not be reduced until the LSC session count fell below or equal to the newly commanded reduced budget, to prevent the corruption of existing sessions.	5.3.2.17.3.4.2.2	R	R	R
235	The LSC, MFSS, and WAN SS shall have the capability of setting the percentage of calls to be blocked to the designated destination(s).	5.3.2.17.3.4.2.7	R	R	R
236	FLASH and FLASH-OVERRIDE calls shall not be affected by NM controls.	5.3.2.17.3.4.2.7	R	R	R
237	Within IP, directionalization is controlled by designating all or part of the call budget as inbound (i.e., local destination) and/or outbound (i.e., local origination). The default is no designation (i.e., calls up to the total budget can be inbound or outbound in any combination). It does not change the total budget, only the sourcing direction of the budget; therefore, there is no impact to the router queue bandwidths.	5.3.2.17.3.4.2.10	C	C	C
238	Within IP, the routing of all traffic (i.e., VVoIP and non-VVoIP) is handled via MPLS in the DISN core. The MPLS automatically finds the most effective route for the traffic.	5.3.2.17.3.4.2.11	R	R	R
239	The WAN-level ASAC must be able to account for each subtended LSC under its control. Therefore, the MFSS and WAN SS ASAC must be able to set call budgets for multiple LSC locations via the VVoIP EMS and local EMS access points.	5.3.2.17.3.4.2.13	R	NA	R
240	The LSC-level ASAC is required to only account for itself. Therefore, the LSC ASAC must be able to set call budgets for only the PEI/AEIs under its control via the VVoIP EMS and local EMS access points.	5.3.2.17.3.4.2.13	NA	R	NA
241	The product shall have the capability of setting a PEI/AEI's maximum allowed precedence level for originating a call. This is a "subscriber class mark feature," which is controlled by the LSC system administrator.	5.3.2.17.3.4.2.14	NA	R	NA
242	The product shall have the capability of controlling the destination(s) that a PEI or AEI is restricted from calling. This is a subscriber class mark feature that is controlled by the LSC system administrator.	5.3.2.17.3.4.2.14	NA	R	NA
243	The ASAC must provide the separate counts for voice and video, in 5-minute intervals. The MFSS and WAN SS ASAC must provide these counts for each of the subtended LSCs under its control, while the LSC is only to provide these counts for the PEIs/AEIs that it controls.	5.3.2.18.2	R	R	R
244	For the selected recording format that is chosen, of all the call information that will be provided, the following call data shall be provided in the record data: 1. Host Name of the CCA controlling the call processing. 2. Start Date of call (In Julian or Calendar). 3. Start Time of Call (Hour + Minute + Second). 4. Elapsed Time of Call and/or Stop Time of call. 5. Calling Number. 6. Called Number (included all dialed digits). 7. Precedence level of call. (NOTE: This may be accomplished either by a specific precedence level designation field in the call, or by providing the dialed precedence level access digits in the called number field.)	5.3.2.19.2.1	R	R	R
245	For the selected recording format that is chosen, of all the call information that will be provided, the following call data shall be provided in the record data if it applies to the call: Conference Call Indicator.	5.3.2.19.2.1	R	R	R
246	The product shall provide a voice quality record at the completion of each voice session. The voice quality record shall be included in the CDR that the LSC, MFSS, or WAN SS generates for that session, and shall conform to the E-Model, as described in TIA TSB-116-A, and ITU-T Recommendation G.107. The voice quality record shall contain the calculated R-Factor for the Voice session per TIA TSB-116-A.	5.3.2.19.2.1.1	R	R	R
247	As part of the voice quality record, the product shall provide the raw voice session statistics that are used to make the R-Factor calculation to include, as a minimum, the latency, packet loss, Equipment Impairment Factor (Ie), and the TCLw. The product shall provide the jitter for the session.	5.3.2.19.2.1.1	R	R	R
248	The product shall generate an alarm to the VVoIP EMS when the session R-Factor calculation in the CDR fails to meet a configurable threshold. By default, the threshold shall be an R-Factor value of 80, which is equivalent to an MOS value of 4.0.	5.3.2.19.2.1.1	R	R	R

Table 3-1. UC Products Capability/Functional Requirements Table (continued)

ID	Requirement	UCR Ref (UCR 2008 CH3)	MFSS	LSC	WAN SS
249	The mass storage in the BA must be non-volatile. The mass storage in the BA must be able to retain at least five average-busy-season business days of AMA data. (NOTE: This is needed to provide adequate capacity for high-volume storage of CDRs.)	5.3.2.19.2.3	R	R	R
250	The BA should be able to output the records electronically over a secured connection. The BA should have the ability to transfer the records to a physical storage media that is also removable.	5.3.2.19.2.4	R	R	R
251	Requirements for Supporting AS-SIP EIs. This section provides the requirements for supporting an AS-SIP interface between LSCs and AS-SIP EIs. This section focuses on what capabilities need to be added to LSCs and AS-SIP EIs to support a generic AS-SIP interface between them. (Instances of SS here refer to the internal LSC within the SS.)	5.3.2.22.2	NA	R	NA
252	Requirements for AS-SIP Secure Voice EIs. The LSCs shall support AS-SIP secure voice EIs that use AS-SIP for EI LSC signaling. The LSCs shall support these AS-SIP secure voice EIs using the AS-SIP LSC-to-AS-SIP-EI interface defined in Section 5.3.2.22.3.1, Multiple Call Appearances, and in Section 5.3.4, AS-SIP Requirements.	5.3.2.22.2.2	NA	R	NA
253	Requirements for AS-SIP Video EIs. LSCs shall support AS-SIP Video EIs that use AS-SIP for EI LSC signaling. The LSCs shall support these AS-SIP Video EIs using the AS-SIP LSC-to-AS-SIP-EI interface defined in Section 5.3.2.22.3.1, Multiple Call Appearances, and in Section 5.3.4, AS-SIP Requirements.	5.3.2.22.2.3	NA	R	NA
254	The AS-SIP signaling appliance shall divert ALL unanswered UC VoIP calls above the ROUTINE precedence level to a designated UC DN for PCD.	5.3.2.25	R	R	C
255	Unanswered UC VoIP calls above the ROUTINE precedence level shall not be forwarded to voicemail, and shall not be forwarded to ACD systems. Instead, they should divert to the PCD DN when the PCD time period expires.	5.3.2.25	R	R	C
256	Unanswered UC VoIP calls at the ROUTINE precedence level shall still be forwarded to voicemail or to ACD systems (when CFDA is assigned to the called UC DN), even though PCD is enabled and configured for the ASSIP signaling appliance.	5.3.2.25	R	R	C
257	Calls above the ROUTINE precedence level that are destined to (directly dialed to) DNs assigned to voicemail or ACD systems shall only divert to the PCD DN as specified above (i.e., when they are unanswered at the voicemail or ACD system, and the PCD time period expires).	5.3.2.25	R	R	C
258	ROUTINE precedence level calls that are destined to (directly dialed to) DNs assigned to voicemail or ACD systems shall be allowed.	5.3.2.25	R	R	C
259	Incoming precedence calls to the attendant's listed DN, and incoming calls that are diverted to this attendant DN, shall be placed in a queue for the attendant console (or group of attendant consoles).	5.3.2.25	R	R	C
260	When a group of attendant consoles on the same LSC is used, and calls are either placed or diverted to the attendant console DN, call distribution across the Console Group shall be used to reduce excessive caller waiting times.	5.3.2.25	R	R	C
261	Incoming calls (placed and diverted) to the console DN shall be queued for attendant service by call precedence and time of arrival. The highest precedence call with the longest holding time in the queue shall be offered to an attendant first.	5.3.2.25	R	R	C
262	A recorded message of explanation (e.g., ATQA) shall be applied automatically to all the waiting calls in the Attendant Console queue (refer to Table 5.3.4-9, Announcements).	5.3.2.25	R	R	C
263	The RTS Attendant Console shall interoperate with PBAS/ASAC as described in • Section 5.3.2.7.2.1, PBAS/ASAC Requirements • Section 5.3.2.2.2.3, ASAC – Open Loop • Section 5.3.4.10, Precedence and Preemption The console shall be able to initiate all levels of RTS precedence calls (i.e., ROUTINE through FLASH-OVERRIDE).	5.3.2.26.1	R	R	R
264	The RTS Attendant Console shall provide a visual display of each precedence level and the calling number, for incoming direct dialed calls to the attendant, and diverted calls to the attendant (e.g., calls that reach the attendant through PCD).	5.3.2.26.2	R	R	R
265	The appliance and the attendant console shall give the attendant the ability to verify and override a busy line condition.	5.3.2.26.4	R	R	R

Table 3-1. UC Products Capability/Functional Requirements Table (continued)

ID	Requirement	UCR Ref (UCR 2008 CH3)	MFSS	LSC	WAN SS
266	If the attendant uses BLV on a called line, and that called line (called EI) is busy, the appliance and the attendant console shall give an audible and visual "called line busy" indication back to the attendant.	5.3.2.26.4	R	R	R
267	The appliance and the attendant console shall prevent an attendant from activating BLV or Emergency Interrupt to called lines and called numbers that are located in the commercial network (the PSTN).	5.3.2.26.4	R	R	R
268	The appliance and the attendant console shall give the attendant the ability to use Emergency Interrupt to interrupt an existing call on a busy line, and inform the busy user of a new incoming call.	5.3.2.26.4	R	R	R
269	The appliance shall give selected destination EIs the ability to be exempt from Emergency Interrupt and attendant break-in.	5.3.2.26.4	R	R	R
270	The appliance and the attendant console shall have the ability to route all calls that are normally directed to the console to a separate night service deflection number. The night service deflection number shall be a fixed (preconfigured) or manually-selected DN.	5.3.2.26.5	R	R	R
271	When an attendant redirects an incoming call to a destination station, and that station is either busy or does not answer the call within a preset time, the appliance and the attendant console shall ensure that calling party on the redirected call is recalled automatically to the console.	5.3.2.26.6	R	R	R
272	The appliance and the attendant console shall have the ability to place calls (both directed to the attendant and diverted to the attendant) into a waiting queue.	5.3.2.26.7	R	R	R
273	The appliance and the attendant console shall ensure that calls in the attendant queue are not lost when a console is placed out of service or has its calls forwarded to a night service deflection number.	5.3.2.26.7	R	R	R
274	WAN SS or MFSS to LRDB Interface: DB Queries for HR. The requirements in this section apply to the WAN SS, the MFSS, and the LRDB. The LRDB can be located in a site that is physically remote from the WAN SS or MFSS site.	5.3.2.28.2	R	NA	R
275	The LSC and the LRDB shall support the Commercial Cost Avoidance feature per the requirements in this section.	5.3.2.28.3	NA	R	NA
276	The LSC shall support an interface to a LRDB to support DB queries and DB responses for the Commercial Cost Avoidance feature.	5.3.2.28.3	NA	R	NA
277	The LRDB shall support an interface to the LSC to support DB queries and DB responses for the Commercial Cost Avoidance feature.	5.3.2.28.3	NA	R	NA
278	The query-response interface between the LSC and the LRDB shall be LDAPv3 over TLS over IP. On the LSC, this LDAPv3 interface shall be compliant with IETF RFC 4511 and RFC 4510. On the LRDB, see the LDAPv3 interface requirement in Section 5.3.2.28.5.2.1, General Architecture, Protocols and Interfaces.	5.3.2.28.3	NA	R	NA
279	The encoding of the LDAPv3 messages and data schema used on the DB query interface between the LSC and the LRDB shall follow the BER of ASN.1. On the LSC this encoding shall be consistent with Section 5.1, Protocol Encoding, of RFC 4511. On the LRDB, see the LDAPv3 interface requirement in Section 5.3.2.28.5.2.1, General Architecture, Protocols and Interfaces.	5.3.2.28.3	NA	R	NA
280	The interface between the LSC and the LRDB shall be secured using TLS, consistent with the requirements for securing AS-SIP messages using TLS in Section 5.4, Information Assurance Requirements. This security shall provide mutual authentication between the LSC and the LRDB, message confidentiality for the DB query and DB response, and message integrity for the DB query and DB response.	5.3.2.28.3	NA	R	NA
281	The interface between the LSC and the LRDB shall traverse the data firewalls (and not the EBC firewalls) at both the LSC and LRDB sites.	5.3.2.28.3	NA	R	NA
282	The interface between the LSC and the LRDB shall traverse the CE Routers at both the LSC and LRDB sites, using the DSCP for User Signaling traffic, and the associated CE Router queues.	5.3.2.28.3	NA	R	NA
283	The interface between the LSC and the LRDB shall terminate on the Ethernet interface used for VVoIP signaling traffic at the LSC, as described in Section 5.4, Information Assurance Requirements.	5.3.2.28.3	NA	R	NA
284	Commercial Cost Avoidance Query from LSC. The LSC shall have the capability to query Commercial Cost Avoidance.	5.3.2.28.3.1	NA	R	NA
285	DB Response When Commercial Number is Not Found. In the Number Found case, the LSC shall accept and process the Commercial Cost Avoidance response from the LRDB containing the DSN number that matches the commercial called number.	5.3.2.28.3.3	NA	R	NA

Table 3-1. UC Products Capability/Functional Requirements Table (continued)

ID	Requirement	UCR Ref (UCR 2008 CH3)	MFSS	LSC	WAN SS
286	LSC to MRDB Interface: DB Updates for Commercial Cost Avoidance and Hybrid Routing. The LSC and the MRDB shall support the routing DB update feature per the requirements in this section and Section 5.3.2.28.5, LRDB and MRDB Requirements, and Section 5.3.2.28.6, MRDB and LRDB Operations.	5.3.2.28.3.4	NA	R	NA
287	LDAP Add Operation. The LSC shall send a DB update automatically to the MRDB whenever a new end user is added to the LSC, unless the RTS Routing DB "opt out" indication has been made for that user.	5.3.2.28.3.4.1.1	NA	R	NA
288	LDAP Delete Operation. The LSC shall send a DB update automatically to the MRDB whenever an existing end user is deleted from the LSC, unless the RTS Routing DB "opt out" indication has been made for that user.	5.3.2.28.3.4.1.3	NA	R	NA
289	Request Processing. The LSCs, MFSSs, or WAN SSs are expected to direct their LDAP Search requests to the LRDBs for call processing purposes. The LSC is expected to perform updates to the MRDB; it could add a new entry, delete an existing entry, or modify values of attributes in an existing entry. Adding new attributes that are not predefined in the schema is not allowed.	5.3.2.28.5.2.3	NA	R	NA
290	Client Time-Out. If an LDAP operation does not return results within a preset time, the LDAP client (LSC or MFSS, or WAN SS) should be able to terminate (time-out) the session in a reasonable amount of time.	5.3.2.28.5.2.3.1	R	R	R
291	Bind over TLS. All connections between the LSC, MFSS or WAN SS to any of the DBs shall use TLS by default. An Anonymous or Unauthenticated Bind request shall be disallowed by default on all connections from the LSC, MFSS and WAN SS to any of the DBs.	5.3.2.28.5.2.3.2	R	R	R
292	Data Caching. One means of boosting query throughput is to implement a cache for frequently retrieved data since typically, accessing memory is faster than disk access. Caches can be implemented at the client site (in this case at the LSC, MFSS, or WAN SS). The LSC, MFSS, or WAN SS shall implement storage buffers that are capable of supporting LDAP entry caches. This capability shall be configurable; the caching or buffering option shall be turned on or off as needed.	5.3.2.28.5.2.4.2	R	R	R
293	Failover Procedures. The LSC, MFSS, or WAN SS shall use keep-alive messages to verify that the MRDB (or the backup MRDB) and the LRDBs are available. a. The frequency of the keep-alive messages shall be settable (Timer Ta) by the network administrators based on traffic volumes, with a default of Ta= 5 minutes. b. The value of Ta shall range from 0–30 minutes and shall be settable in increments of 5 minutes	5.3.2.28.5.2.5	R	R	R
294	MRDB Failover. Each LSC that accesses the primary and backup MRDBs shall support the configuration of two DISA network IP addresses for those MRDBs: one for the primary MRDB (used when the primary is active) and another for the backup MRDB (used when the primary has failed).	5.3.2.28.5.2.5.1	NA	R	NA
295	LRDB Failover. Each LSC, MFSS, or WAN SS that accesses LRDBs shall support the configuration of two DISA network IP addresses for those routing DBs: one for a primary LRDB and another for a secondary LRDB (used when the primary has failed).	5.3.2.28.5.2.5.2	R	R	R
296	Alarms. This section covers requirements for alarms to be issued by the routing DB or the LSC, MFSS, or WAN SS when conditions exist on the LDAP interface between an LSC, MFSS, or WAN SS and a routing DB that may be symptomatic of a hardware or software failure.	5.3.2.28.6.3	R	R	R
297	Hybrid Routing Requirements for Preventing PRI "Hairpin" Routes. These network appliances shall not perform any ANSI T1.619A PRI routing hairpins on HR calls that are originated on the DISA TDM network, processed by the SS using the RTS Routing DB, and then terminated on the DISA TDM network. These network appliances shall use "routing hairpin elimination" features to prevent these routing hairpins from occurring on these HR calls.	5.3.2.28.8	R	NA	R
298	Dynamic ASAC. If the product supports an ongoing session, in which the EIs can renegotiate audio or video codec changes at the bearer layer (e.g., modem protocol), the product shall set EISC at the highest bit rate that can be re-negotiated by the EIs mid-session via the bearer layer.	5.3.2.30.2.2	R	C	R

Table 3-1. UC Products Capability/Functional Requirements Table (continued)

ID	Requirement	UCR Ref (UCR 2008 CH3)	MFSS	LSC	WAN SS
299	Attendant Features. This section contains an import and revision of historical circuit-switched requirements from UCR 2008, 22 January 2009, Section 5.2.1.2, Attendant Features. The revision converts these historical DSN requirements into current UC requirements. Attendant features in this section apply to attendant consoles that are provided with the local LSC and/or centralized attendant services.	5.3.2.31	R	R	R
300	MLPP Overview. The MLPP service applies to the MLPP service domain only. Connections and resources that belong to a call from an MLPP subscriber shall be marked with a precedence level and domain identifier (refer to Section 5.3.2.31.3.8, ISDN MLPP PRI, and Section 5.3.2.31.3.10, MLPP CCS7) and shall only be preempted by calls of higher precedence from MLPP users in the same MLPP service domain. The maximum precedence level of a subscriber is set at the subscription time by the UC network administrator based on the subscriber's validated need. The subscriber may select a precedence level up to and including the maximum authorized precedence level on a per call basis.	5.3.2.31.3.2	R	R	R
301	All AS-SIP signaling appliances MUST comply with the SIP syntax and encoding rules set forth in RFC 3261. [(see RFC 3261, Section 25, Augmented BNF for the SIP Protocol) and with the corrections in RFC 5954 Essential Correction for IPv6 ABNF and URI Comparison in RFC 3261.]	5.3.4.7.1.1	R	R	R
302	When an AS-SIP signaling appliance does not understand a header field in a request (and support for the header field is not a mandatory requirement under this specification), the AS-SIP signaling appliance MUST ignore that header field and continue processing the message. The AS-SIP signaling appliances MUST ignore any malformed header fields that are not necessary for processing requests.	5.3.4.7.1.3	R	R	R
303	When an AS-SIP signaling appliance that is implemented as a SIP proxy receives a SIP Request message, 2xx response, or 18x response, then the AS-SIP signaling appliance MUST add a Record-Route header whereby the userinfo part of the SIP URI is a unique identifier for the AS-SIP signaling appliance and an IP address is used for the host name.	5.3.4.7.1.3c	R	R	R
304	All AS-SIP signaling appliances MUST be call stateful.	5.3.4.7.1.4	R	R	R
305	Upon receipt of a new request, AS-SIP signaling appliances MUST perform request validation, route information preprocessing, determine request targets, perform request forwarding, perform response processing, process timer C, handle transport error, handle CANCEL processing, and perform proxy route processing according to RFC 3261	5.3.4.7.1.5	R	R	R
306	All AS-SIP signaling appliances MUST support generation of the long form of the SIP header fields along with the receipt and processing of the long form of the SIP header fields.	5.3.4.7.1.7	R	R	R
307	All AS-SIP signaling appliances MUST support receiving and processing the compact form of the SIP header fields.	5.3.4.7.1.8	R	R	R
308	All AS-SIP signaling appliances serving IP EIs MUST support the offer/answer model for the Session Description Protocol (SDP).	5.3.4.7.1.9	R	R	R
309	If an LSC receives a call request from a served IP EI and the LSC has been unable to establish a TLS connection with its EBC and is unable to do so upon receipt of the INVITE, then the AS-SIP signaling appliance MUST ensure that the IP EI plays the Isolated Code Announcement (ICA) and terminates the call request and MUST send an alarm to the NMS.	5.3.4.7.1.10	NA	R	NA
310	When an SS receives an INVITE from either a served LSC or another SS where the Request-URI has a DSN telephone number for which the SS has no entry in its Location Server, then the SS MUST respond with a 404 (Not Found) response code.	5.3.4.7.1.12	R	R	R
311	When an LSC receives an inbound INVITE from its primary (or secondary) SS whose Request-URI has a DSN telephone number for which the LSC has no entry in its Location Server, then the LSC MUST respond with a 404 (Not Found) response message.	5.3.4.7.1.13	R	R	R
312	The LSCs serving IP EIs MUST ensure that all outbound INVITEs forwarded onto the UC WAN include a Supported header with the option tag "100rel."	5.3.4.7.1.14	NA	R	NA
313	When an AS-SIP signaling appliance receives an INVITE (having an sdp offer) and will be interworking the signaling to the TDM network, then the AS-SIP signaling appliance MUST return an sdp answer in the first non-failure reliable provisional response.	5.3.4.7.1.15	R	R	R

Table 3-1. UC Products Capability/Functional Requirements Table (continued)

ID	Requirement	UCR Ref (UCR 2008 CH3)	MFSS	LSC	WAN SS
314	When an LSC receives an INVITE (having an sdp offer) intended for a served IP EI, then the AS-SIP signaling appliance MUST NOT return an sdp answer in any provisional response and MUST only place the sdp answer in the 200 response.	5.3.4.7.1.16	NA	R	NA
315	When an AS-SIP signaling appliance receives an Empty INVITE (i.e., an INVITE that does not include an sdp offer) and said AS-SIP signaling appliance will be interworking the signaling to the TDM network, then the AS-SIP signaling appliance MUST send an sdp offer in the first reliable non-failure provisional response (1xx response code greater than a 100 response code).	5.3.4.7.1.17	R	R	R
316	When an AS-SIP signaling appliance receives an Empty INVITE intended for a served IP EI, then the AS-SIP signaling appliance MUST NOT send an sdp offer in any provisional response (1xx response code greater than a 100 response code) and MUST only send the sdp offer in the 200 response.	5.3.4.7.1.18	R	R	R
317	When an AS-SIP signaling appliance that is interworking SIP signaling with the TDM network receives a 180 (Ringing) response from the IP network, the AS-SIP signaling appliance MUST ensure that the appropriate ring back tone (e.g., ring back, precedence ring back) is generated on the TDM network.	5.3.4.7.1.19	R	R	R
318	Announcements are not sent in-band on the DSN TDM network; therefore, when an AS-SIP signaling appliance that is interworking SIP signaling with the TDM network receives a 480 (Temporarily Unavailable), 486 (Busy Here), or 488 (Not Acceptable Here) response from the IP network with either no Reason header or a Reason header that does NOT have a preemption cause, the AS-SIP signaling appliance does NOT generate an announcement to be sent to the TDM network, rather it sends either a REL with Q.850 cause code 46 precedence call blocked (in the case of SS7 ISUP) or a Disconnect (in the case of ISDN) with the appropriate cause code message to the TDM network.	5.3.4.7.1.20	R	R	R
319	An LSC that receives an outbound call request from a served IP EI MAY include an audio media feature tag and a video media feature tag, as appropriate, in the Contact header field of the INVITE message.	5.3.4.7.1.21	NA	R	NA
320	The AS-SIP signaling appliances are NOT required to process and act on the audio media tag and the video media tag in the Contact header but all intermediary AS-SIP signaling appliances MUST preserve the audio media tag (if present) and the video tag (if present) when forwarding the INVITE. (i.e., intermediary AS-SIP signaling appliances MUST NOT strip off or modify the media feature tags).	5.3.4.7.1.22	R	R	R
321	When an LSC receives a call request from a served IP EI intended for a destination outside the enclave, then the AS-SIP signaling appliance MUST generate the P-Asserted-Identity header.	5.3.4.7.1.23	NA	R	NA
322	The LSC serving the AS-SIP EI MUST support authentication of the AS-SIP EIs. The user of the AS-SIP EI is required to perform user authentication to the LSC when initiating precedence call requests.	5.3.4.7.1.26	NA	R	NA
323	The LSCs serving IP EIs (other than AS-SIP EIs) MUST support authentication of the IP EIs. The user of the IP EI is required to perform user authentication to the LSC when initiating precedence call requests.	5.3.4.7.1.31	NA	R	NA
324	When an LSC serving H.323 and/or proprietary EIs receives a request that contains a Require header field with one or more option tags that it does not understand, then it MUST return a 420 (Bad Extension) response code. The response MUST include an Unsupported header field listing those option tags the element did not understand.	5.3.4.7.1.35	NA	R	NA
325	The LSCs and AS-SIP EIs MUST support the generating, receiving, and processing of SIP CANCEL requests.	5.3.4.7.2.2	NA	R	NA
326	The AS-SIP signaling appliances MUST support the keep-alive mechanism for SIP sessions.	5.3.4.8.1.1	R	R	R
327	The AS-SIP signaling appliances MUST support the generating, receiving, and processing of the Session-Expires and Min-SE header fields.	5.3.4.8.1.3	R	R	R
328	The AS-SIP signaling appliances MUST support the 422 (Session Interval Too Small) response code.	5.3.4.8.1.4	R	R	R
329	The AS-SIP signaling appliances MUST support the option tag “timer” for use with the Supported and Require header fields; however, an AS-SIP signaling appliance acting as a UAC or a SIP EI acting as a UAC MUST NOT place the option tag “timer” in either a Require header or a Proxy-Require header.	5.3.4.8.1.5	R	R	R

Table 3-1. UC Products Capability/Functional Requirements Table (continued)

ID	Requirement	UCR Ref (UCR 2008 CH3)	MFSS	LSC	WAN SS
330	When an AS-SIP signaling appliance receives an outbound request from a served H.323 or proprietary IP EI, then the AS-SIP signaling appliance MUST operate in accordance with the UAC behavior (when responsible for performing the refresh).	5.3.4.8.1.8	R	R	R
331	When an AS-SIP signaling appliance receives a call request from another AS-SIP signaling appliance, and the destination is a served H.323 or proprietary IP EI, then the AS-SIP signaling appliance MUST operate in accordance with the UAS behavior (when responsible for performing the refresh).	5.3.4.8.1.10	R	R	R
332	When SDP information is present in a SIP message, the SIP message MUST have a content-type header having the MIME Content-Type "application/sdp".	5.3.4.9.1.2	R	R	R
333	The SDP parser in the AS-SIP signaling appliance (and all AS-SIP EIs, including AS-SIP video conferencing EIs) MUST be able to accept and handle without error any of the SDP line types enumerated in RFC 2327 even if the application ignores the contents.	5.3.4.9.1.3	R	R	R
334	The precedence level of the call request MUST be set forth in a SIP Resource-Priority header field whose syntax is in accordance with RFC 4412, as modified in UCR 2008, Section 5.3.4.10.2	5.3.4.10.2.1	R	R	R
335	Video telephony EIs MUST, as the default configuration, require an end user wishing to place a call that includes video, to affirmatively signal the intention to include video to the EI every time the caller wishes to engage in a video telephony call.	5.3.4.12.1.1	R	R	R
336	Every time a caller requests a video telephony call and the video portion of the telephony call is successfully established, then the video telephony EI MUST provide the user with an affirmative confirmation that the video is enabled either before, or upon successful completion of, session establishment.	5.3.4.12.1.2	R	R	R
337	When an INVITE with an sdp offer that includes both audio and video capabilities is received by an LSC serving a destination EI that supports video telephony, then when the call request is received by the destination EI the destination EI MUST indicate to the callee that a telephony call requesting video connectivity has been received.	5.3.4.12.2.1	R	R	R
338	Every time a callee accepts a video telephony call and the video portion of the telephony call is successfully established, then the video telephony EI MUST provide the user with an affirmative confirmation that the video is enabled either before or upon successful session establishment.	5.3.4.12.2.3	R	R	R
339	AS-SIP Signaling appliances must follow call flows depicted in section 5.3.4.13 for all call features and calling services.	5.3.4.13	R	R	R
340	AS-SIP Signaling appliances must follow requirements depicted in section 5.3.4.14 for all IP to TDM and TDM to IP translations.	5.3.4.14	R	R	R
341	When an interworking AS-SIP signaling appliance receives a request that contains a Require header field with one or more option-tags that it does not understand, then the interworking AS-SIP signaling appliance MUST return a 420 (Bad Extension) response. The response MUST include an Unsupported header field listing those option-tags the element did not understand.	5.3.4.16.1.1	R	R	R
342	All outbound INVITEs generated by an interworking AS-SIP signaling appliance MUST include a Supported header with the option tag "100rel."	5.3.4.16.1.2	R	R	R
343	Interworking AS-SIP signaling appliances MUST support generating and receiving SIP INVITE requests. Interworking AS-SIP signaling appliances MUST support generating and receiving SIP re-INVITES.	5.3.4.16.2.1	R	R	R
344	Interworking AS-SIP signaling appliances MUST support generating and receiving SIP CANCEL requests.	5.3.4.16.2.2	R	R	R
345	Interworking AS-SIP signaling appliances MUST support generating and receiving SIP OPTIONS requests.	5.3.4.16.2.4	R	R	R
346	Interworking AS-SIP signaling appliances MUST support generating and receiving SIP BYE requests	5.3.4.16.2.5	R	R	R
347	Interworking AS-SIP signaling appliances MUST support generating and receiving SIP ACK requests	5.3.4.16.2.6	R	R	R
348	Interworking AS-SIP signaling appliances MUST support generating and receiving the SIP PRACK method. Interworking AS-SIP signaling appliances MUST support use of the option tag "100rel" with the Require header and Supported header, and MUST support the use of header fields RAck and RSeq.	5.3.4.16.2.8	R	R	R
349	Interworking AS-SIP signaling appliances MUST support generating and receiving the SIP UPDATE method	5.3.4.16.2.9	R	R	R

Table 3-1. UC Products Capability/Functional Requirements Table (continued)

ID	Requirement	UCR Ref (UCR 2008 CH3)	MFSS	LSC	WAN SS
350	Inter-working AS-SIP signaling appliances MUST be capable of receiving/processing REFER requests, the Refer-To header, and the REFER event package.	5.3.4.16.2.10	R	R	R
351	Interworking AS-SIP signaling appliances MUST support the NOTIFY method for event notification.	5.3.4.16.2.12	R	R	R
352	Interworking AS-SIP signaling appliances MUST, in adherence with the enumerated RFCs, be capable of generating, receiving, and processing the SIP headers listed in UCR 2008 Section 5.3.4.16.3.1	5.3.4.16.3.1	R	R	R
353	The From header MUST include a tag field as specified in RFC 3261, Section 19.3.	5.3.4.16.3.3	R	R	R
354	The To header of a request that is part of a dialog MUST include a tag field as specified in RFC 3261, Section 19.3.	5.3.4.16.3.4	R	R	R
355	Interworking AS-SIP signaling appliances MUST support the use of option tags for the Require, Supported, and Unsupported headers.	5.3.4.16.3.5	R	R	R
356	When the interworking LSC sends an initial AS-SIP INVITE to its local EBC intended for its SS, the interworking LSC MUST add two Route header field values, which either takes the form of a route set comprising two Route headers where the first Route header is the sip uri for the EBC at the enclave and the second Route header is the sip uri for the EBC serving the SS, or takes the form of one Route header with two comma-separated field values.	5.3.4.16.3.6.1	NA	R	NA
357	When an interworking SS forwards an initial AS-SIP INVITE to a peer SS, then the interworking SS MUST add a route set comprising two Route headers where the first Route header is the SIP URI for the EBC that serves the interworking SS, and the second Route header is the SIP URI for the EBC serving the peer SS.	5.3.4.16.3.7	R	NA	R
358	When an interworking AS-SIP signaling appliance generates an outbound AS-SIP request, the interworking AS-SIP signaling appliance MUST add its own VIA header to the AS-SIP request.	5.3.4.16.3.8	R	R	R
359	When an interworking AS-SIP signaling appliance receives a SIP response to be translated into TDM signaling, then the interworking AS-SIP signaling appliance operates as the UAC for SIP purposes.	5.3.4.16.3.9	R	R	R
360	When an interworking AS-SIP signaling appliance receives an inbound SIP request to be translated into TDM signaling, then the AS-SIP signaling appliance operates as the UAS for SIP purposes.	5.3.4.16.3.10	R	R	R
361	When an interworking AS-SIP signaling appliance generates a SIP response on behalf of a signaling message received from the TDM network, then before forwarding the SIP response the interworking AS-SIP signaling appliance MUST include the VIA headers received in the corresponding SIP request.	5.3.4.16.3.11	R	R	R
362	When an interworking AS-SIP signaling appliance operating as an originating gateway receives an IAM from the TDM network and sends an INVITE to another AS-SIP signaling appliance (SS or LSC), then the interworking AS-SIP signaling appliance MUST add a CCA-ID parameter to the SIP URI of the Contact header populated with its unique identifier before forwarding the INVITE onward to the next AS-SIP signaling appliance.	5.3.4.16.3.12	R	R	R
363	Interworking AS-SIP signaling appliances MUST support generating, receiving, and processing the provisional (1xx) response codes: 100 (Trying), 180 (Ringing), and 183 (Session Progress).	5.3.4.16.4.1	R	R	R
364	Interworking AS-SIP signaling appliances MUST support generating and receiving/processing the successful (2xx) response codes: 200 (OK) [RFC 3261, Section 21.2, 200 OK] and 202 (Accepted)	5.3.4.16.4.2	R	R	R
365	Interworking AS-SIP signaling appliances MUST support generating and receiving/processing the request failure (4xx) response codes: 400 (Bad Request), 401 (Unauthorized), 403 (Forbidden), 404 (Not Found), 405 (Method Not Allowed), 406 (Not Acceptable), 407 (Proxy Authentication Required), 408 (Request Timeout), 410 (Gone), 413 (Request Entity Too Large), 414 (Request-URI Too Long), 415 (Unsupported Media Type), 416 (Unsupported URI Scheme), 417 (Unknown Resource-Priority), 420 (Bad Extension), 421 (Extension Required), 422 (Session Interval Too Small), 423 (Interval Too Brief), 480 (Temporarily Unavailable), 481 (Call/Transaction Does Not Exist), 482 (Loop Detected), 483 (Too Many Hops), 484 (Address Incomplete), 485 (Ambiguous), 486 (Busy Here), 487 (Request Terminated), 488 (Not Acceptable Here), and 491 (Request Pending).	5.3.4.16.4.4	R	R	R

Table 3-1. UC Products Capability/Functional Requirements Table (continued)

ID	Requirement	UCR Ref (UCR 2008 CH3)	MFSS	LSC	WAN SS
366	Interworking AS-SIP signaling appliances upon properly receiving a CANCEL request for an INVITE MUST first send a 200 (OK) response code to the CANCEL, and then follow up with a 487 (Request Terminated) response code to the INVITE.	5.3.4.16.4.5	R	R	R
367	Interworking AS-SIP signaling appliances MUST support generating and receiving/processing the server failure (5xx) response codes: 500 (Server Internal Error), 501 (Not Implemented), 502 (Bad Gateway), 503 (Service Unavailable), 504 (Server Timeout), 505 (Version Not Supported), 513 (Message Too Large) [RFC 3261, Section 21.5, Server Failure 5xx], and 580 (Precondition Failure)	5.3.4.16.4.6	R	R	R
368	Interworking AS-SIP signaling appliances MUST support generating and receiving/processing the global failures (6xx) response codes: 600 (Busy Everywhere), 603 (Decline), 604 (Does Not Exist Anywhere), and 606 (Not Acceptable).	5.3.4.16.4.7	R	R	R
369	When an interworking AS-SIP signaling appliance receives an outbound request from the PSTN (i.e., the interworking AS-SIP signaling appliance is operating as an originating gateway) and the destination is NOT an IP EI directly served by the interworking AS-SIP signaling appliance, then the interworking AS-SIP signaling appliance MUST operate in accordance with the UAC behavior set forth in RFC 4028.	5.3.4.17.1.1	R	R	R
370	When an interworking AS-SIP signaling appliance acting as a terminating gateway receives a call request from another AS-SIP signaling appliance, then the interworking AS-SIP signaling appliance MUST operate in accordance with the UAS behavior set forth in RFC 4028.	5.3.4.17.1.3	R	R	R
371	Interworking AS-SIP signaling appliances MUST support the option tag “resource-priority” for use with the Require header.	5.3.4.18.3.1	R	R	R
372	The interworking AS-SIP signaling appliance MUST receive and accept a Require header field with the option tag “resource-priority” in the INVITE, UPDATE, and REFER messages. Interworking AS-SIP signaling appliances MUST NOT reject the message with a 420 (Bad Extension) response code, but rather it MUST accept the request and translate it into the appropriate TDM signaling message as required.	5.3.4.18.3.2	R	R	R
373	If an interworking AS-SIP signaling appliance receives an inbound ROUTINE call request over the IP network for a destination on the TDM network and the interworking AS-SIP signaling appliance has insufficient bandwidth-related resources (e.g., lack of circuit-switched trunk capacity for bearer traffic) to handle the call request, the interworking AS-SIP signaling appliance MUST reply with a 488 (Not Acceptable Here) response code and SHOULD include a Warning header with warning code 370 (Insufficient Bandwidth).	5.3.4.18.4.5	R	R	R
374	If an interworking AS-SIP signaling appliance receives an inbound precedence call request (i.e., with precedence level PRIORITY or above) over the IP network for a destination on the TDM network and the interworking AS-SIP signaling appliance has insufficient bandwidth-related resources (e.g., lack of circuit-switched trunk capacity for bearer traffic) to handle the call request, and if there are insufficient existing calls (and/or call requests) of lower precedence whose removal would provide the necessary resources to support the pending call request, then: - The interworking AS-SIP signaling appliance MUST reply with a 488 (Not Acceptable Here) response code and SHOULD include a Warning header with warning code 370 (Insufficient Bandwidth), and - The AS-SIP signaling appliance serving the calling IP EI MUST arrange for a BPA to be played to the calling IP EI before terminating the call.	5.3.4.18.4.6	R	R	R
375	AS-SIP signaling appliances must follow all call flows depicted in UCR 2008 Section 5.3.4.19 for all supplementary services.	5.3.4.19	R	R	R
376	The product shall support dual IPv4 and IPv6 stacks as described in RFC 4213.	5.3.5.4	R	R	R
377	Dual stack end points or Call Control Agents shall be configured to choose IPv4 over IPv6.	5.3.5.4	R	R	R
378	All nodes and interfaces that are “IPv6-capable” must be carefully configured and verified that the IPv6 stack is disabled until it is deliberately enabled as part of a deliberate transition strategy.	5.3.5.4	R	R	R
379	The product shall support the IPv6 format as described in RFC 2460 and updated by RFC 5095.	5.3.5.4	R	R	R
380	The product shall support the transmission of IPv6 packets over Ethernet networks using the frame format defined in RFC 2464.	5.3.5.4	R	R	R
381	The product shall support a minimum MTU of 1280 bytes.	5.3.5.4.1	R	R	R

Table 3-1. UC Products Capability/Functional Requirements Table (continued)

ID	Requirement	UCR Ref (UCR 2008 CH3)	MFSS	LSC	WAN SS
382	The product shall not use the Flow Label field as described in RFC 2460. The product shall be capable of setting the Flow Label field to zero when originating a packet. The product shall not modify the Flow Label field when forwarding packets. The product shall be capable of ignoring the Flow Label field when receiving packets.	5.3.5.4.2	R	R	R
383	The product shall support the IPv6 Addressing Architecture as described in RFC 4291.	5.3.5.4.3	R	R	R
384	The product shall support the IPv6 Scoped Address Architecture as described in RFC 4007.	5.3.5.4.3	R	R	R
385	The product shall support Neighbor Discovery for IPv6 as described in RFC 2461 and RFC 4861.	5.3.5.4.5	R	R	R
386	The product shall not set the override flag bit in the Neighbor Advertisement message for solicited advertisements for anycast addresses or solicited proxy advertisements.	5.3.5.4.5	R	R	R
387	When a valid “Neighbor Advertisement” message is received by the product and the product neighbor cache does not contain the target’s entry, the advertisement shall be silently discarded.	5.3.5.4.5	R	R	R
388	When a valid “Neighbor Advertisement” message is received by the product and the product neighbor cache entry is in the INCOMPLETE state when the advertisement is received and the link layer has addresses and no target link-layer option is included, the product shall silently discard the received advertisement.	5.3.5.4.5	R	R	R
389	When address resolution fails on a neighboring address, the entry shall be deleted from the product’s neighbor cache.	5.3.5.4.5	R	R	R
390	The product shall support the ability to configure the product to ignore Redirect messages. The product shall only accept Redirect messages from the same router as is currently being used for that destination.	5.3.5.4.5.1	R	R	R
391	If the product supports routing functions, the product shall inspect valid router advertisements sent by other routers and verify that the routers are advertising consistent information on a link and shall log any inconsistent router advertisements. The product shall prefer routers that are reachable over routers whose reachability is suspect or unknown.	5.3.5.4.5.2	NA	NA	NA
392	The product shall support manual assignment of IPv6 addresses.	5.3.5.4.6	R	R	R
393	The product shall support the ICMPv6 as described in RFC 4443. The product shall have a configurable rate limiting parameter for rate limiting the forwarding of ICMP messages.	5.3.5.4.7	R	R	R
394	The product shall support the capability to enable or disable the ability of the product to generate a Destination Unreachable message in response to a packet that cannot be delivered to its destination for reasons other than congestion.	5.3.5.4.7	R	R	R
395	The product shall support the enabling or disabling of the ability to send an Echo Reply message in response to an Echo Request message sent to an IPv6 multicast or anycast address.	5.3.5.4.7	R	R	R
396	The product shall validate ICMPv6 messages, using the information contained in the payload, before acting on them.	5.3.5.4.7	R	R	R
397	If the product supports routing functions, the product shall support the MLD process as described in RFC 2710 and extended in RFC 3810.	5.3.5.4.8	R	R	R
398	For traffic engineering purposes, the bandwidth required per voice subscriber is calculated to be 110.0 kbps (each direction) for each IPv6 call.	5.3.5.4.11	R	R	R
399	The product shall forward packets using the same IP Version as the Version in the received packet.	5.3.5.4.12	R	R	R
400	The product shall use the ANAT semantics for the SDP in accordance with RFC 4091 when establishing media streams from dual-stacked appliances for AS-SIP signaled sessions.	5.3.5.4.12	R	R	R
401	The product shall prefer any IPv4 address to any IPv6 address when using ANAT semantics.	5.3.5.4.12	R	R	R
402	The product shall place the option tag “SDP-ANAT” in a Required header field when using ANAT semantics in accordance with RFC 4092.	5.3.5.4.12	R	R	R
403	The products shall support Differentiated Services as described in RFC 2474 for a voice and video stream in accordance with Section 5.3.2, Assured Services Requirements, and Section 5.3.3, Network Infrastructure E2E Performance Requirements, plain text DSCP plan.	5.3.5.4.14	R	R	R

Table 3-1. UC Products Capability/Functional Requirements Table (continued)

LEGEND:

ABNF	Augmented Backus-Naur Form
ACD	Automatic Call Distribution
AEI	AS-SIP End Instrument
A-law	standard companding algorithm used in European digital telecommunications
AMA	Automatic Message Accounting
ANAT	Alternative Network Address Types
ANSI	American National Standards Institute
AS	Assured Services
ASAC	Assured Services Admission Control
ASLAN	Assured Services Local Area Network
AS-SIP	Assured Services Session Initiation Protocol
ATQA	Attendant Queue Announcement
B2BUA	Back-to-back User Agent
BA	Billing Agent
BER	Basic Encoding Rules
BLV	Busy Line Verification
BNF	Backus-Naur Form
B/P/C/S	Base/Post/Camp/Station
C	Conditional
C2	Command and Control
CAC	Call Admission Control
CAS	Channel Associated Signaling
CCA	Call Connection Agent
CCS7	Common Channel Signaling Number 7
CDR	Call Detail Record
CE	Customer Edge
CF	Call Forward
CFDA	Call Forward Don't Answer
CH3	Change 3
CND	Calling Number Delivery
CONUS	Continental United States
D-Channel	Data Channel
DB	Database
DHCP	Dynamic Host Configuration Protocol
DISA	Defense Information Systems Agency
DISN	Defense Information Systems Network
DN	Directory Number
DoD	Department of Defense
DSCP	Differentiated Services Code Point
DSN	Defense Switched Network
E1	European Basic Multiplex Rate
E2E	End-to-end
EBC	Edge Boundary Controller
EC	Echo Canceller
EI	End Instrument
EMS	Element Management System
EO	End Office
ETSI	European Telecommunications Standards Institute
FCAPS	Fault, Configuration, Accounting, Performance, and Security
FoIP	Fax over Internet Protocol
FQDN	Fully Qualified Domain Name
G3 Fax	Group 3 Facsimile
GR	Generic Requirement
Hz	Hertz
IAD	Integrated Access Device
IAM	Initial Address Message
IAW	in accordance with
ICA	Isolated Code Announcement
ID	Identification
ICMP	Internet Control Message Protocol
ICMPv6	Internet Control Message Protocol for IPv6
IEEE	Institute of Electrical and Electronics Engineers
IETF	Internet Engineering Task Force
IP	Internet Protocol
IPB	IP ASAC Budget
IPC	IP ASAC Call Count
IPSec	Internet Protocol Security
IPv4	Internet Protocol version 4
IPv6	Internet Protocol version 6
ISDN	Integrated Services Digital Network
ISUP	ISDN User Part
ITU-T	International Telecommunication Union - Telecommunication Standardization Sector
IWF	Interworking Function
kbps	kilobits per second
LAN	Local Area Network
LDAPv3	Lightweight Directory Access Protocol version 3
LRDB	Local Routing Database
LSC	Local Session Controller
MAC	Media Access Control
Mbps	Megabits per second
MFS	Multifunction Switch
MFSS	Multifunction SoftSwitch
MG	Media Gateway
MGC	Media Gateway Controller
MLD	Multicast Listener Discovery
MLPP	Multi-Level Precedence and Preemption
MoIP	Modem over Internet Protocol
MOS	Mean Opinion Score
MPLS	Multiprotocol Label Switching
Mrdb	Master Routing Database
ms	milliseconds
MTU	Maximum Transmission Unit
NA	Not Applicable
NE	Network Element
NM	Network Management
NMS	Network Management System
NRT	Near Real Time
OCONUS	Outside the Continental United States
PBAS	Precedence Based Assured Services
PBX	Private Branch Exchange
PCD	Precedence Call Diversion
PCM	Pulse Code Modulation
PEI	Proprietary End Instrument
PRI	Primary Rate Interface
PSTN	Public Switched Telephone Network
R	Required
RFC	Request For Comments
RTS	Real Time Services
SBU	Sensitive, but Unclassified
SCIP	Secure Communications Interoperability Protocol
SCS	Session Control and Signaling
SDP	Session Description Protocol
SG	Signaling Gateway
SIP	Session Initiation Protocol
SMEO	Small End Office
SNMPv3	Simple Network Management Protocol version 3
SRTCP	Secure Real-Time Transport Control Protocol
SRTP	Secure Real-Time Transport Protocol
SS	Softswitch
SS7	Signaling System 7
SUT	System Under Test
T1	Digital Transmission Link Level 1
TA	Terminal Adaptor
TCLw	Weighted Terminal Coupling Loss
TDM	Time Division Multiplexing
TIA	Telecommunications Industry Association
TLS	Transport Layer Security
UAC	User Agent Client
UAS	User Agent Server
UC	Unified Capabilities
UCR	Unified Capabilities Requirements
UDP	User Datagram Protocol
µ-law	standard companding algorithm used in North American and Japanese digital telecommunications
URI	Uniform Resource Identifier
U.S.	United States
VBD	Voice Band Data
VoIP	Voice over Internet Protocol
VVoIP	Voice and Video over Internet Protocol
WAN	Wide Area Network