DEFENSE INFORMATION SYSTEMS AGENCY
P. O. BOX 549
FORT MEADE, MARYLAND 20755-0549

IN REPLY REFER TO: Joint Interoperability Test Command (JTE)

MEMORANDUM FOR DISTRIBUTION **2 Sep 11**

SUBJECT: Special Interoperability Test Certification of the Avaya Aura S8800 and Hewlett Packard (HP) DL-360 G7 with Release (Rel.) Communication Manager (CM) 6.0.1 (00.1.510.1 Service Pack 19211).

References: (a) DoD Directive 4630.05, "Interoperability and Supportability of Information Technology (IT) and National Security Systems (NSS)," 5 May 2004
(b) CJCSI 6212.01E, "Interoperability and Supportability of Information Technology and National Security Systems," 15 December 2008
(c) through (i), see Enclosure 1

1. References (a) and (b) establish the Joint Interoperability Test Command (JITC), as the responsible organization for interoperability test certification.

2. The Avaya Aura S8800 and HP DL-360 G7 with Release (Rel.) Communication Manager (CM) 6.0.1 (00.1.510.1 Service Pack 19211), hereinafter referred to as the System Under Test (SUT), meets all the critical interoperability requirements for Local Session Controller (LSC) and is certified for joint use within the Defense Information System Network (DISN). The Defense Information Systems Agency adjudicated that Test Discrepancy Reports (TDRs) open at the completion of testing were determined to have a minor operational impact. The operational impact of noted discrepancies was based on the SUT's conditions of fielding during the initial transition from legacy to Internet Protocol (IP) based communications. The fielding of the SUT is limited to IP version 4 (IPv4) only across the DISN. The SUT is certified for joint use with dual stack IPv6 intra-enclave. The SUT has also been tested as a Small End Office (SMEO) switch, and met the critical interoperability requirements for a SMEO. The SUT was tested with the Avaya S8800 Core server. JITC analysis determined that the Hewlett Packard DL-360 G7 server is exactly the same as the S8800 Core server with the exception of a faster central processing unit and therefore it is also interoperability certified for joint use. Any new discrepancy noted in the operational environment will be evaluated for impact on the existing certification. These discrepancies will be adjudicated to the satisfaction of Defense Information Systems Agency (DISA) via a vendor Plan of Action & Milestones (POA&M), which will address all new critical TDRs within 120 days of identification. Testing was conducted using LSC product requirements derived from the Unified Capabilities Requirements (UCR), Reference (c) and (d), and LSC test procedures, Reference (f). SMEO product requirements were derived from UCR References (e) and (f) and SMEO test procedures derived from Reference (f) and (i). No other configurations, features, or functions, except those cited within this memorandum are certified by JITC. This certification expires upon changes that affect interoperability, but no later than three years from 20 April 2011; which is the date the DISA CA provided a positive Recommendation.

3. This finding is based on interoperability testing conducted by JITC, DISA adjudication of open TDRs, review of the vendor's Letters of Compliance (LoC), and DISA Certifying Authority (CA) approval of the IA configuration. Initial interoperability testing was conducted by JITC, Fort Huachuca, Arizona, from 2 August through 17 September 2010. Review of the vendor's LoC was completed on 8 March 2011. DISA adjudication of outstanding TDRs was completed on 21 April 2011. Verification & Validation (V&V) testing was conducted from 4-8 July 2011 to fix open test discrepancies. The DISA CA has reviewed the IA Assessment Report for the SUT, Reference (h), and based on the findings in the report has provided a positive recommendation. The acquiring agency or site will be responsible for the Department of Defense (DoD) Information Assurance Certification and Accreditation Process (DIACAP) accreditation. Enclosure 2 documents the test results and describes the tested network and system configurations including specified patch releases.

4. The interface, Capability Requirements (CR) and Functional Requirements (FR), and component status of the SUT are listed in Tables 1 and 2. The threshold Capability/Functional requirements for LSCs and SMEOs, with the exception of SMEO NM requirements which are found in UCR 2008, Section 5.2.8, are established by Sections 5.3.2, 5.3.4, 5.3.5, and 5.4 of Reference (c) and were used to evaluate the interoperability of the SUT. Enclosure 3 provides a detailed list of LSC requirements.

**Table 1. SUT Interface Interoperability Status**

| Interface | Critical | UCR Reference | Threshold CR/FR[1] | Status | Remarks[2] |
|---|---|---|---|---|---|
| **Line Interfaces** | | | | | |
| 10Base-X | Yes | 5.3.2.6.3 | 1, 2, 3, 4, 10, 13, and 16 | Certified | SUT met threshold CRs/FRs for IEEE 802.3i and 802.3j. Applies to PEIs (voice) and Softphone (voice). |
| 100Base-X | Yes | 5.3.2.6.3 | 1, 2, 3, 4, 10, 13, and 16 | Certified | SUT met threshold CRs/FRs for IEEE 802.3u with the SUT PEIs. |
| 1000Base-X | No | 5.3.2.6.3 | 1, 2, 3, 4, 10,13, and 16 | Not Tested | This interface is not offered by the SUT PEIs. |
| 2-wire analog | Yes | 5.3.2.6.1.6 | 1, 2, 3, 4, 10, and 13 | Certified | SUT met threshold CRs/FRs for 2-wire analog interfaces. |
| ISDN BRI[3] | No | 5.3.2.6.1.8 | 1, 2, 3, 4, 10, and 13 | Certified | SUT met threshold CRs/FRs for BRI interface with the. |
| Digital Proprietary | No | 5.2 | 1, 2, 3, 4, 10, and 13 | Certified | SUT met threshold CRs/FRs for Digital Proprietary interface. |
| **External Interfaces** | | | | | |
| 10Base-X | No | 5.3.2.4.2 | 1, 2, 3, 6, 7, 8, 10, 11, 13, 15, and 16 | Certified | Met threshold CRs/FRs for IEEE 802.3i and 802.3j for the AS-SIP trunk. |
| 100Base-X | No | 5.3.2.4.2 | 1, 2, 3, 6, 7, 8, 10, 11, 13, 15, and 16 | Certified | Met threshold CRs/FRs for IEEE 802.3u for the AS-SIP trunk. |
| 1000Base-X | No | 5.3.2.4.2 | 1, 2, 3, 6, 7, 8, 10, 11, 13, 15, and 16 | Not Tested | This interface is not offered by the SUT. |

**Table 1. SUT Interface Interoperability Status (continued)**

| Interface | Critical | UCR Reference | Threshold CR/FR[1] | Status | Remarks[2] |
|---|---|---|---|---|---|
| **External Interfaces** | | | | | |
| ISDN T1 PRI ANSI T1.619a | Yes | 5.3.2.4.3 | 2, 3, 7, 8, 10, and 13 | Certified | Met threshold CRs/FRs. This interface provides legacy DSN and TELEPORT connectivity. |
| ISDN T1 PRI NI-2 | Yes | 5.3.2.4.3 | 2, 3, 7, 8, 10, and 13 | Certified | Met threshold CRs/FRs. This interface provides PSTN connectivity. |
| T1 CCS7 ANSI T1.619a | No | 5.3.2.12.9 | 2 , 3, 7, 8, 10, and 13 | Not Tested | This interface is not offered by the SUT. |
| T1 CAS (DTMF[3], MFR1) | No | 5.3.2.12.11 | 2, 3, 7, 8, 10, and 13 | Certified | Met threshold CRs/FRs. This interface provides legacy DSN and TELEPORT connectivity with DTMF (Standard, ABCD) and Multifrequency R1 digit formats. |
| E1 CAS | No (LSC), Yes (SMEO) | 5.3.2.12.11 | 2, 3, 7, 8, 10, and 13 | Certified | Met threshold CRs/FRs and met interface criteria for T1 CAS with MLPP. |
| E1 PRI[4] ITU-T Q.955.3 | No | 5.3.2.12.10 | 2, 3, 7, 8, 10, and 13 | Not Tested | Although this interface is offered by the SUT, it was not tested. This interface is not certified by JITC and is not required for an LSC. |
| E1 PRI[4] ITU-T Q.931 | No | 5.3.2.12.10 | 2, 3, 7, 8, 10, and 13 | Not Tested | Although this interface is offered by the SUT, it was not tested. This interface is not certified by JITC and is not required for an LSC. |
| **Network Management Interfaces** | | | | | |
| 10Base-X | No[5] | 5.3.2.4.4 5.3.2.7.2.8 | 16, 17, and 18[6] | Certified | Met threshold CRs/FRs. Verified via LoC. |
| 100Base-X | No[5] | 5.3.2.4.4 5.3.2.7.2.8 | 16, 17, and 18[6] | Certified | Met threshold CRs/FRs. Verified via LoC. |

**NOTES:**
1. The SUT high-level CR and FR ID numbers depicted in the Threshold CRs/FRs column can be cross-referenced in Table 2. These high-level CR/FR requirements refer to a detailed list of requirements provided in Enclosure 3.
2. Detailed information pertaining to open TDRs and associated operational impacts is in Enclosure 2, paragraph 11.
3. This interface is required only for a SMEO.
4. This interface is required for only for Europe deployment.
5. The SUT must provide a minimum of one of the following NM interfaces: 10Base-X or 100Base-X.
6. These NM CRs and FRs are required only for SMEO.

## Table 1. SUT Interface Interoperability Status (continued)

**LEGEND:**

| | | | |
|---|---|---|---|
| 10Base-X | 10 Mbps Ethernet | ITU-T | International Telecommunication Union – Telecommunication Standardization Sector |
| 100Base-X | 100 Mbps Ethernet | JITC | Joint Interoperability Test Command |
| 1000Base-X | 1000 Mbps Ethernet | LoC | Letter of Compliance |
| 802.3i | 10 Mbps twisted pair media for 10Base-X networks | LSC | Local Session Controller |
| 802.3j | 10 Mbps fiber media for 10Base-X networks | Mbps | Megabits per second |
| 802.3u | 100BASE-TX, 100BASE-T4, 100BASE-FX Fast Ethernet at 100 Mbps with auto negotiation | MLPP | Multi-Level Precedence and Preemption |
| ANSI | American National Standards Institute | NI-2 | National ISDN Standard 2 |
| AS-SIP | Assured Services Session Initiation Protocol | NM | Network Management |
| BRI | Basic Rate Interface | PEI | Proprietary End Instrument |
| CAS | Channel Associated Signaling | PRI | Primary Rate Interface |
| CCS7 | Common Channel Signaling 7 | PSTN | Public Switched Telephone Network |
| CR | Capability Requirement | Q.931 | Signaling Standard for ISDN |
| DSN | Defense Switched Network | Q.955.3 | ISDN Signaling Standard for E1 MLPP |
| DTMF | Dual Tone Multi-Frequency | SMEO | Small End Office |
| E1 | European Basic Multiplex Rate (2.048 Mbps) | SS7 | Signaling System 7 |
| FR | Functional Requirement | SUT | System Under Test |
| IAD | Integrated Access Device | T1 | Digital Transmission Link Level 1 (1.544 Mbps) |
| ID | Identification | T1.619a | SS7 and ISDN MLPP Signaling Standard for T1 |
| IEEE | Institute of Electrical and Electronics Engineers | TDR | Test Discrepancy Report |
| ISDN | Integrated Services Digital Network | UCR | Unified Capabilities Requirements |

## Table 2. SUT CR and FR Status

| CR/FR ID | Capability/ Function | Applicability[1] | UCR Reference | Status | Remarks |
|---|---|---|---|---|---|
| 1 | **Assured Services Product Features and Capabilities** | | | | |
| | DSCP Packet Marking | Required | 5.3.2.2.1.4 | Met | |
| | Voice Features and Capabilities | Required | 5.3.2.2.2.1 | Met | |
| | Public Safety Features | Required | 5.3.2.2.2.2 | Met | |
| | ASAC – Open Loop | Required | 5.3.2.2.2.3 | Met | |
| | Signaling Protocols | Required | 5.3.2.2.2.3 | Met | |
| | Signaling Performance | Required | 5.3.2.2.2.4 | Met | |
| 2 | **Registration, Authentication, and Failover** | | | | |
| | Registration | Required | 5.3.2.3.1 | Met | |
| | Failover | Required | 5.3.2.3.2 | Met | |
| 3 | **Product Physical, Quality, and Environmental Factors** | | | | |
| | Availability | Required | 5.3.2.5.2.1 | Met | |
| | Maximum Downtimes | Required | 5.3.2.5.2.2 | Met | |
| | Loss of Packets | Required | 5.3.2.5.4 | Met | |

**Table 2. SUT CR and FR Status (continued)**

| CR/FR ID | Capability/ Function | Applicability[1] | UCR Reference | Status | Remarks |
|---|---|---|---|---|---|
| 4 | **Voice End Instruments** | | | | |
| | Tones and Announcements | Required | 5.3.2.6.1.1 | Met | |
| | Audio Codecs | Conditional[2] | 5.3.2.6.1.2 | Partially Met[2] | |
| | VoIP PEI or AEI Audio Performance Requirements | Required | 5.3.2.6.1.3 | Met[3] | |
| | VoIP Sampling Standard | Required | 5.3.2.6.1.4 | Met | |
| | Authentication to LSC | Required | 5.3.2.6.1.5 | Met | |
| | Analog Telephone Support | Required | 5.3.2.6.1.6 | Met | |
| | Softphones | Conditional | 5.3.2.6.1.7 | Met | |
| | ISDN BRI | Conditional | 5.3.2.6.1.8 | Met | |
| 5 | **Video End Instruments** | | | | |
| | Video End Instrument | Required | 5.3.2.6.2 | Not Tested[4] | |
| | Display Messages, Tones, and Announcements | Required | 5.3.2.6.2.1 | Not Tested[4] | |
| | Video Codecs (Including Associated Audio Codecs) | Required | 5.3.2.6.2.2 | Not Tested[4] | |
| 6 | **LSC Requirements** | | | | |
| | PBAS/ASAC Requirements | Required | 5.3.2.7.2.1 | Met | |
| | Calling Number Delivery Requirements | Required | 5.3.2.7.2.2 | Met | |
| | LSC Signaling Requirements | Required | 5.3.2.7.2.3 | Met | |
| | Service Requirements under Total Loss of WAN Transport | Required | 5.3.2.7.2.4 | Met | |
| | Local Location Server and Directory | Required | 5.3.2.7.2.5 | Met | |
| | LSC Transport Interface Functions | Required | 5.3.2.7.2.7 | Met | |
| | LSC to PEI, AEI, and Operator Console Status Verification | Required | 5.3.2.7.2.10 | Partially Met[5] | |
| | Line-Side Custom Features Interference | Conditional | 5.3.2.7.2.11 | Met | |
| | Loop Avoidance | Required | 5.3.2.7.3 | Met | |

**Table 2. SUT CR and FR Status (continued)**

| CR/FR ID | Capability/ Function | Applicability[1] | UCR Reference | Status | Remarks |
|---|---|---|---|---|---|
| 7 | **Call Connection Agent Requirements** | | | | |
| | CCA IWF Component | Required | 5.3.2.9.2.1 | Met | |
| | CCA MGC Component | Required | 5.3.2.9.2.2 | Met | |
| | SG Component | Conditional | 5.3.2.9.2.3 | Not Tested[6] | |
| | CCA-IWF Support for AS-SIP | Required | 5.3.2.9.5.1 | Met | |
| | CCA-IWF Support for SS7 | Conditional | 5.3.2.9.5.2 | Not Tested[6] | |
| | CCA-IWF Support for PRI via MG | Required | 5.3.2.9.5.3 | Met | |
| | CCA-IWF Support for CAS Trunks via MG | Conditional | 5.3.2.9.5.4 | Partially Met[7] | |
| | CCA-IWF Support for PEI and AEI Signaling Protocols | Required | 5.3.2.9.5.5 | Met[3] | |
| | CCA-IWF Support for VoIP and TDM Protocol Interworking | Required | 5.3.2.9.5.6 | Met | |
| | CCA Preservation of Call Ringing State during Failure Conditions | Required | 5.3.2.9.6 | Met | |
| | CCA Interactions with Transport Interface Functions | Required | 5.3.2.10.3 | Met | |
| | CCA Interactions with the EBC | Required | 5.3.2.10.4 | Met | |
| | CCA Support for Admission Control | Required | 5.3.2.10.5 | Met | |
| | CCA Support for UFS | Required | 5.3.2.10.6 | Met | |
| | CCA Support for IA | Required | 5.3.2.10.7 | Met | IA is covered under separate report. |
| | CCA Interaction with EIs | Required | 5.3.2.10.10 | Partially Met[3] | |
| | CCA Support for AS Voice and Video | Required | 5.3.2.10.11 | Partially Met[4] | |
| | CCA Interactions with Service Control Functions | Required | 5.3.2.10.12 | Met | |
| | CCA Interworking between AS-SIP and SS7 | Conditional | 5.3.2.11 | Not Tested[6] | |
| 8 | **MG Requirements** | | | | |
| | Role of MG In LSC | Required | 5.3.2.12.3.1 | Met | |
| | MG Support for ASAC | Required | 5.3.2.12.4.1 | Met | |
| | MG and IA Functions | Required | 5.3.2.12.4.2 | Met | IA is covered under separate report. |
| | MG Interaction with Service Control Function | Required | 5.3.2.12.4.3 | Met | |
| | MG Interactions with IP Transport Interface Functions | Required | 5.3.2.12.4.4 | Met | |
| | MG-EBC interactions | Required | 5.3.2.12.4.5 | Met | |
| | MG IP-Based PSTN Interface Requirements | Conditional | 5.3.2.12.4.7 | Not Tested[6] | |
| | MG Interaction with EIs | Required | 5.3.2.12.4.8 | Met | |
| | MG support for User Features and Services | Required | 5.3.2.12.4.9 | Met | |
| | MG Interface to TDM | Required | 5.3.2.12.5 | Met | |
| | MG Interface to TDM Allied and Coalition | Conditional | 5.3.2.12.6 | Not Tested[6] | |
| | MG Interface to TDM PSTN in U.S. | Required | 5.3.2.12.7 | Met | |
| | MG Interfaces to TDM PSTN OCONUS | Required | 5.3.2.12.8 | Not Met[8] | |
| | MG Support for CCS7 | Conditional | 5.3.2.12.9 | Not Tested[6] | |
| | MG Support for ISDN PRI Trunks | Required | 5.3.2.12.10 | Met | |

**Table 2. SUT CR and FR Status (continued)**

| CR/FR ID | Capability/ Function | Applicability[1] | UCR Reference | Status | Remarks |
|---|---|---|---|---|---|
| 8 | **MG Requirements (continued)** | | | | |
| | MG Support for CAS Trunks | Required | 5.3.2.12.11 | Partially Met[7] | |
| | MG requirements for VoIP Internal Interfaces | Required | 5.3.2.12.12 | Met | |
| | MG Echo Cancellation | Required | 5.3.2.12.13 | Met | |
| | MG Clock Timing | Required | 5.3.2.12.14 | Met | |
| | MGC-MG CCA Functions | Required | 5.3.2.12.15 | Met | |
| | MG ITU-T V.150.1 | Required | 5.3.2.12.16 | Not Met[9] | |
| | MG Preservation of Call Ringing during Failure | Required | 5.3.2.12.17 | Met | |
| 9 | **SG Requirements** | | | | |
| | SG and CCS7 Network Interactions | Conditional | 5.3.2.13.5.1 | Not Tested[7] | |
| | SG Interactions with CCA | Conditional | 5.3.2.13.5.2 | Not Tested[7] | |
| | SG Interworking Functions | Conditional | 5.3.2.13.5.3 | Not Tested[7] | |
| 10 | **WWNDP Requirements** | | | | |
| | WWNDP | Required | 5.3.2.16 | Met | |
| | DSN WWNDP | Required | 5.3.2.16.1 | Met | |
| 11 | **Commercial Cost Avoidance** | | | | |
| | Commercial Cost Avoidance | Required | 5.3.2.23 | Not Met[10] | |
| 12 | **AS-SIP Based for External Devices (Voicemail, Unified Messaging, and Automated Receiving Devices)** | | | | |
| | AS-SIP Requirements for External Interfaces | Conditional | 5.3.2.24 | Met[11] | |
| 13 | **Precedence Call Diversion** | | | | |
| | Precedence call Diversion | Required | 5.3.2.25 | Met | |
| 14 | **Attendant Station Features** | | | | |
| | Precedence and Preemption | Required | 5.3.2.26.1 | Met | |
| | Call Display | Required | 5.3.2.26.2 | Met | |
| | Class of Service Override | Required | 5.3.2.26.3 | Met | |
| | Busy Override and Busy Verification | Required | 5.3.2.26.4 | Met | |
| | Night service | Required | 5.3.2.26.5 | Met | |
| | Automatic Recall of Attendant | Required | 5.3.2.26.6 | Met | |
| | Calls in Queue to the Attendant | Required | 5.3.2.26.7 | Met | |
| 15 | **AS-SIP Requirements** | | | | |
| | SIP Requirements for AS-SIP Signaling Appliances and AS-SIP Eis | Required | 5.3.4.7 | Met | |
| | SIP Session Keep-Alive Timer | Required | 5.3.4.8 | Met | |
| | Session Description Protocol | Required | 5.3.4.9 | Met | |
| | Precedence and Preemption | Required | 5.3.4.10 | Met | |
| | Video Telephony – General Rules | Required | 5.3.4.12 | Not Met[4] | |
| | Calling Services | Required | 5.3.4.13 | Partially Met[12] | |
| | SIP Translation Requirements for Inter-working AS-SIP Signaling Appliances | Required | 5.3.4.14 | Met | |
| | Relevant Timers for the Terminating Gateway and the Originating Gateway | Required | 5.3.4.15 | Met | |
| | SIP Requirements for Interworking AS-SIP Signaling Appliances | Required | 5.3.4.16 | Met | |
| | Keep-Alive Timer Requirements for Interworking AS-SIP Signaling Appliances | Required | 5.3.4.17 | Met | |
| | Precedence and Preemption Extensions for Interworking AS-SIP Signaling Appliances | Required | 5.3.4.18 | Met | |
| | Supplementary Services | Required | 5.3.4.19 | Partially Met[12] | |

## Table 2. SUT CR and FR Status (continued)

| CR/FR ID | Capability/ Function | Applicability (See note 1.) | UCR Reference | Status | Remarks |
|---|---|---|---|---|---|
| 16 | **IPv6 Requirements** | | | | |
| | Product Requirements | Required | 5.3.5.4 | Met | G450 supports IPv4/v6 dual stack. G650 supports IPv4 only. |
| 17 | **NM Requirements (LSC)** | | | | |
| | LSC Management Function | Required | 5.3.2.7.2.6 | Met | |
| | VVoIP NMS Interface Requirements | Required | 5.3.2.4.4 | Met | |
| | General Management requirements | Required | 5.3.2.17.2 | Met | |
| | Requirement for FCAPS Management | Required | 5.3.2.17.3 | Partially Met[13] | |
| | NM requirements of Appliance Functions | Required | 5.3.2.18 | Met | |
| | Accounting Management | Required | 5.3.2.19 | Partially Met[14] | |
| 18 | **NM Requirements (SMEO)** | | | | |
| | Physical Interface to ADIMSS | Required | 5.2.8.1 | Met | SUT requirement was met with an IEEE 8.02.3u Ethernet Interface. |
| | Measurements and Data Generation | Required | 5.2.8.2 | Met | |
| | Fault Management | Required | 5.2.8.3 | Met | |
| | Configuration Management | Required | 5.2.8.4 | Met | |
| | Automated Message Accounting | Required | 5.2.8.5 | Met | |
| | Performance Management | Required | 5.2.8.6 | Met | |

**NOTES:**

1. The annotation of 'required' refers to a high-level requirement category. The applicability of each sub-requirement is provided in Enclosure 3.
2. The SUT Media Gateway and CCA do not support the ITU-T G.723.1 codec. This requirement was changed in UCR 2008 change 2 from required to conditional with an immediate applicability.
3. The SUT met the requirement for ITU-T H.323 PEIs, but did not meet requirements for an AEI because none were provided. The SUT was tested to UCR 2008 change 1 requirements and since the AEI requirements are new, vendor has 18 months to comply (July 2011).
4. The SUT supports Legacy H.320 video with ISDN PRI and BRI interfaces; however, it does not support IP video PEI or AEI EIs. This was adjudicated by DISA to have a minor operational impact because of the limited deployment of IP video.
5. The SUT LSC to PEI, AEI and Operator Console Status Verification do not support a default set of 5mintues. The SUT default is 20 every 20 seconds but is configurable up to 2 hours. This was adjudicated by DISA as having a minor operational impact with the recommendation to change this requirement to remove the default value as long as it is configurable.
6. The SUT met the IWF requirements with the T1 PRI interfaces and T1/E1 CAS. The SUT does not support SS7 or IP based PSTN interfaces which are not required for an LSC.
7. The SUT met all critical T1 CAS interface requirements with the following exceptions adjudicated by DISA as having a minor operational impact with no POA&M to fix it:
   - The SUT acknowledges a wink start signal greater than 350 ms. The SUT recognizes wink start signals up to 395 ms.
   - The SUT preempt signal is out of tolerance. The SUT generates a preempt signal from 336 to 339 ms. The requirement is 340 to 350 ms. Since all switches acknowledge the preempt signal from 328 to 363 ms there is no impact.
8. The SUT offers an E1 ETSI ISDN PRI interface however it was not tested and is not covered under this certification. The E1 ETSI ISDN PRI interface is required only for deployment in Europe. The SUT does support the conditional E1 CAS interface for Europe, and therefore the SUT is not certified for deployment in Europe.
9. The vendor submitted a LoC stating that the SUT does not support ITU-T V.150.1 Vendor submitted a POA&M and plans to support this feature in the next major CM release for July 2012. ITU-T V.150.1 is a new UCR 2008 change 1 requirement and the vendor has 18 months (July 2011) to comply.
10. The SUT do not support Commercial Cost Avoidance with the DISN RTS Routing Database or LDAP Version 3 messages for a Database Query. This is a new UCR 2008 change 1 requirement and the vendor has 18 months (July 2011) to comply. Vendor submitted a POA&M stating plans to support this feature in the next major CM release for May 2012; however DISA stipulated that they would need to see the vendor comply by September 2011.
11. The SUT met this requirement with the Communication Manager Messaging Voice Mail System which is listed separately on the UC APL.
12. The SUT met the UCR Supplementary Services and Calling Services Requirements with the following exceptions adjudicated by DISA as having a minor operational impact with a Vendor POA&M to fix in next major CM release for July 2012:
   - Call Forwarded calls above ROUTINE ring the destination at ROUTINE cadence although the precedence level is maintained.
   - Unattended Call Transfers to the Avaya AS5300 @ precedence above ROUTINE are class marked at ROUTINE.
   - Instruments assigned the Hotline Feature cannot restrict other features (i.e. Hold, Transfer, Add hock Conferencing, etc.)
   - SUT plays Precedence Notification Tone (PNT) to an active user for only 3 seconds. The requirement is indefinite or until user hangs up.

**Table 2. SUT CR and FR Status (continued)**

**NOTES:**
13. The SUT met the NM requirements in accordance with UCR 2008 Change 1 Section 5.3.2.17.3 with the following exception: The SUT does not have the ability to limit calls to a destination based on percentage of calls based on vendors LoC. This discrepancy was adjudicated by DISA as having a minor operational impact with a vendor POA&M to fix in May 2012.
14. The SUT met the NM requirements in accordance with UCR 2008 Change 1 Section 5.3.2.19 with the following exceptions stipulated in the vendor's LoC which were adjudicated by DISA as having a minor operational impact with a vendor POA&M to fix in May 2012.
- Does Not Comply with E-Model MOS in the Call Detail Record (CDR) Requirements
- Does Not Support the Equipment Impairment Factor (le) and the TCLw.
- Does Not Generate Alarms to the VVoIP EMS when E-Model R-factor record in CDR is not met.
- Does not provide a CDR with the R-Factor and associated raw statistics

**LEGEND:**

| | |
|---|---|
| ADIMSS | Advanced Defense Switched Network Integrated Management Support System |
| AEI | AS-SIP End Instrument |
| AS | Assured Services |
| ASAC | Assured Services Admission Control |
| AS-SIP | Assured Services Session Initiation Protocol |
| BRI | Basic Rate Interface |
| CAS | Channel Associated Signaling |
| CCA | Call Connection Agent |
| CR | Capability Requirement |
| CCS7 | Common Channel Signaling |
| DISA | Defense Information Systems Agency |
| DSCP | Differentiated Services Code Point |
| DSN | Defense Switched Network |
| EBC | Edge Boundary Controller |
| EI | End Instrument |
| FCAPS | Fault, Configuration, Accounting, Performance and Security |
| FR | Functional Requirement |
| G.711 | PCM of voice frequencies |
| IA | Information Assurance |
| IP | Internet Protocol |
| ID | Identification |
| ISDN | Integrated Services Digital Network |
| IP | Internet Protocol |
| IPv4 | Internet Protocol version 4 |
| IPv6 | Internet Protocol version 6 |
| ITU-T | International Telecommunication Union - Telecommunication Standardization Sector |
| IWF | Interworking Function |
| kbps | kilobits per second |
| LoC | Letter of Compliance |
| LSC | Local Session Controller |
| Mbps | Megabits per second |
| MG | Media Gateway |
| MGC | Media Gateway Controller |
| NM | Network Management |
| NMS | Network Management System |
| OCONUS | Outside the Continental United States |
| PBAS | Precedence Based Assured Services |
| PCM | Pulse Code Modulation |
| PEI | Proprietary End Instrument |
| POA&M | Plan of Action and Milestones |
| PRI | Primary Rate Interface |
| PSTN | Public Switched Telephone Network |
| SG | Signaling Gateway |
| SIP | Session Initiation Protocol |
| SNMPv3 | Simple Network Management Protocol version 3 |
| SS7 | Signaling System 7 |
| SUT | System Under Test |
| T1 | Digital Transmission Link Level 1 (1.544 Mbps) |
| TDM | Time Division Multiplexing |
| UCR | Unified Capabilities Requirements |
| UFS | User Features and Services |
| U.S. | United States |
| V.150 | Modem over Internet Protocol Networks |
| VoIP | Voice over Internet Protocol |
| VVoIP | Voice and Video over Internet Protocol |
| WAN | Wide Area Network |
| WWNDP | Worldwide Numbering and Dialing Plan |

5. No detailed test report was developed in accordance with the Program Manager's request. JITC distributes interoperability information via the JITC Electronic Report Distribution (ERD) system, which uses Unclassified-But-Sensitive Internet Protocol Router Network (NIPRNet) e-mail. More comprehensive interoperability status information is available via the JITC System Tracking Program (STP). The STP is accessible by .mil/gov users on the NIPRNet at https://stp.fhu.disa.mil. Test reports, lessons learned, and related testing documents and references are on the JITC Joint Interoperability Tool (JIT) at https://jit.fhu.disa.mil (NIPRNet). Information related to DSN testing is on the Telecom Switched Services Interoperability (TSSI) website at https://jitc.fhu.disa.mil/tssi. All associated data is available on the DISA Unified Capability Coordination Office (UCCO) website located at http://www.disa.mil/ucco/.

Special Interoperability Test Certification of the Avaya Aura S8800 and Hewlett Packard (HP) DL-360 G7 with Release (Rel.) Communication Manager (CM) 6.0.1 (00.1.510.1 Service Pack 19211)

6. The JITC point of contact is Capt Stéphane Arsenault, DSN 879-5269, commercial (520) 538-5269, FAX DSN 879-4347, or e-mail to stephane.arsenault@disa.mil. The JITC's mailing address is P.O. Box 12798, Fort Huachuca, AZ 85670-2798. The tracking number for the SUT as an LSC is 1009101 and as a SMEO is 1020101.

FOR THE COMMANDER:

3 Enclosures a/s

for BRADLEY A. CLARK
Chief
Battlespace Communications Portfolio

Distribution (electronic mail):
Joint Staff J-6
Joint Interoperability Test Command, Liaison, TE3/JT1
Office of Chief of Naval Operations, CNO N6F2
Headquarters U.S. Air Force, Office of Warfighting Integration & CIO, AF/XCIN (A6N)
Department of the Army, Office of the Secretary of the Army, DA-OSA CIO/G-6 ASA (ALT), SAIS-IOQ
U.S. Marine Corps MARCORSYSCOM, SIAT, MJI Division I
DOT&E, Net-Centric Systems and Naval Warfare
U.S. Coast Guard, CG-64
Defense Intelligence Agency
National Security Agency, DT
Defense Information Systems Agency, TEMC
Office of Assistant Secretary of Defense (NII)/DOD CIO
U.S. Joint Forces Command, Net-Centric Integration, Communication, and Capabilities Division, J68
Defense Information Systems Agency, GS23

## ADDITIONAL REFERENCES


(c) Office of the Assistant Secretary of Defense, "Department of Defense Unified Capabilities Requirements 2008, Change 1," 22 January 2010
(d) Office of the Assistant Secretary of Defense, "Department of Defense Unified Capabilities Requirements 2008, Change 2," 31 December 2010
(e) Office of the Assistant Secretary of Defense, "Department of Defense Unified Capabilities Requirements 2008," 31 December 2008
(f) Joint Interoperability Test Command, "Unified Capabilities Test Plan (UCTP),"
(g) Joint Interoperability Test Command, "Information Assurance (IA) Assessment of Avaya S8800 and Hewlett Packard (HP) DL-360 G7 Local Session Controller (LSC) with Aura Communication Manager (CM) Release (Rel.) 6.0.1 (Tracking Number 1009101),"
(h) Joint Interoperability Test Command, "Information Assurance (IA) Assessment of Avaya S8800 and Hewlett Packard (HP) DL-360 G7 Small End Office (SMEO) with Aura Communication Manager (CM) Release (Rel.) 6.0.1, (Tracking Number 1020101)," 28 June 2011.
(i) Joint Interoperability Test Command, "Defense Switched Network Generic Switch Test Plan (GSTP), Change 2," 2 October 2006

## CERTIFICATION TESTING SUMMARY

**1. SYSTEM TITLE.** Avaya Aura S8800 and Hewlett Packard (HP) DL360 G7 with Release (Rel.) Communication Manager (CM) 6.0.1 (00.1.510.1 Service Pack 19211); hereinafter referred to as the System Under Test (SUT).

**2. SPONSOR.** SPAWAR PMW 790 Attention: Shirley Dolengo, Address: 4301 Pacific Highway OT4 Rm 2043 San Diego, CA 92110-3127, Phone: (858) 537-8510 e-mail:shirley.dolengo@navy.mil.

**3. SYSTEM POC**. Avaya Government, Governmental Solutions, Attention: Scott Birdzell, Address: 12730 Fair Lakes Circle, Fairfax, VA 22033 U S. Phone: 720-444-8071 . e-mail:scott.birdzell@avayagov.com .

**4. TESTER.** Joint Interoperability Test Command (JITC), Fort Huachuca, Arizona.

**5. SYSTEM DESCRIPTION.** The SUT is a software-based call processing product that provides voice and video services. The SUT only supports legacy H.320 based video; Internet Protocol (IP) based Video services are not supported. The SUT supports legacy analog, Integrated Services Digital Network (ISDN) and digital proprietary line interfaces, T1 and E1 Channel Associated Signaling (CAS), T1 ISDN Primary Rate Interface (PRI) trunk interfaces, as well as IP line and trunk interfaces. The LSC software and functions may be distributed physically among several high-availability server platforms with redundant call management modules and subscriber tables to provide robustness and survivability.

The SUT is an open, scalable, and secure telephony application which provides user and system management functionality; call routing, application integration and extensibility, and enterprise communications networking. The SUT runs under system platform Cent OS/XEN on the Avaya S8800 or HP DL360 G7 server. The SUT supports dual stack IPv4/v6. Both the Avaya S8800 and the HP DL360 G7 servers are based on the Intel Xeon processors. Both come equipped with a Redundant Array of Independent Disks (RAID) controller and a standard redundant hard disk drive. A second power supply is supported to enhance system availability.

The SUT includes two media gateways (G450 and the G650) which provide legacy line and trunk interfaces. In addition the G450 provides intra-enclave IPv6 translations between non-IPv6 IP end instruments and other non IPv6 components (i.e. G650). The G650 is IPv4 only and the G450 is IPv6 dual stack capable.

CM Messaging (CMM) is an open, scalable voice messaging application for Avaya CM and is an optional component of the SUT and the SUT can be purchased with or without the CMM. The CMM provides up to 15000 mailboxes.

The SUT includes Automatic Call Distribution (ACD) communication server software feature that processes incoming, outgoing, and internal calls and distributes them to groups of extensions called hunt groups or splits.

**6. OPERATIONAL ARCHITECTURE.** Figure 2-1 depicts the LSC functional model and Figure 2-2 the Unified Capabilities (UC) Network architecture that the SUT may be used in.

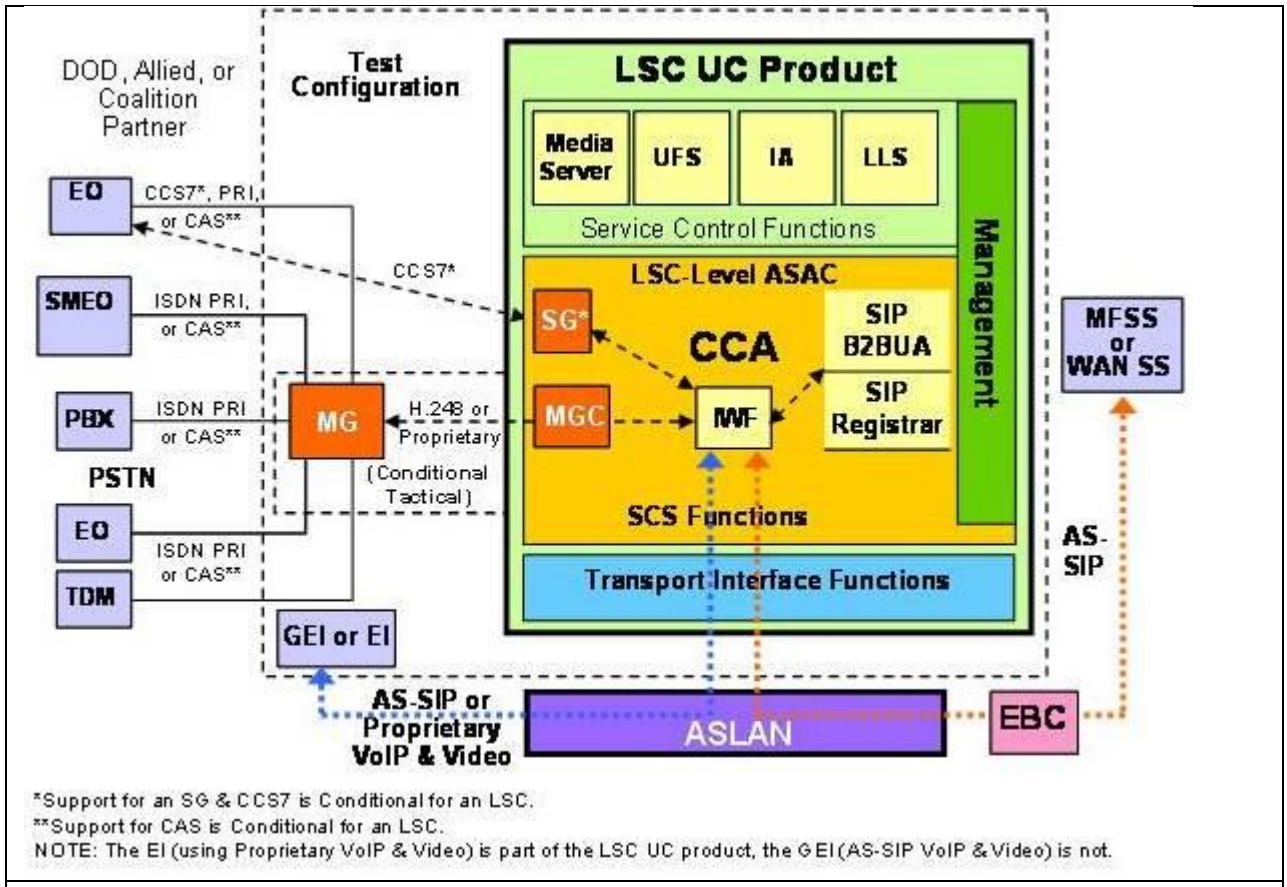


**LEGEND:**

| | | | |
|---|---|---|---|
| ASAC | Assured Service Admission Control | LSC | Local Session Controller |
| ASLAN | Assured Services Local Area Network | MFS | Multifunction Switch |
| AS-SIP | Assured Services Session Initiation Protocol | MFSS | Multifunction Softswitch |
| B2BUA | Back-to-Back User Agent | MG | Media Gateway |
| CAS | Channel Associated Signaling | MGC | Media Gateway Controller |
| CCA | Call Connection Agent | PBX | Private Branch Exchange |
| CCS7 | Common Channel Signaling No. 7 | PRI | Primary Rate Interface |
| DOD | Department of Defense | PSTN | Public Switched Telephone Network |
| EBC | Edge Boundary Controller | SCS | Session Control and Signaling |
| EI | End Instrument | SG | Signaling Gateway |
| EO | End Office | SIP | Session Initiation Protocol |
| GEI | Generic End Instrument | SMEO | Small End Office |
| IA | Information Assurance | SS | Softswitch |
| ISDN | Integrated Services Digital Network | TDM | Time Division Multiplexer |
| IWF | Interworking Function | UC | Unified Capabilities |
| LLS | Local Location Service | UFS | User Features and Services |
| LSC | Local Session Controller | WAN | Wide Area Network |
| | | VoIP | Voice over Internet Protocol |

**Figure 2-1. LSC Functional Reference Model**

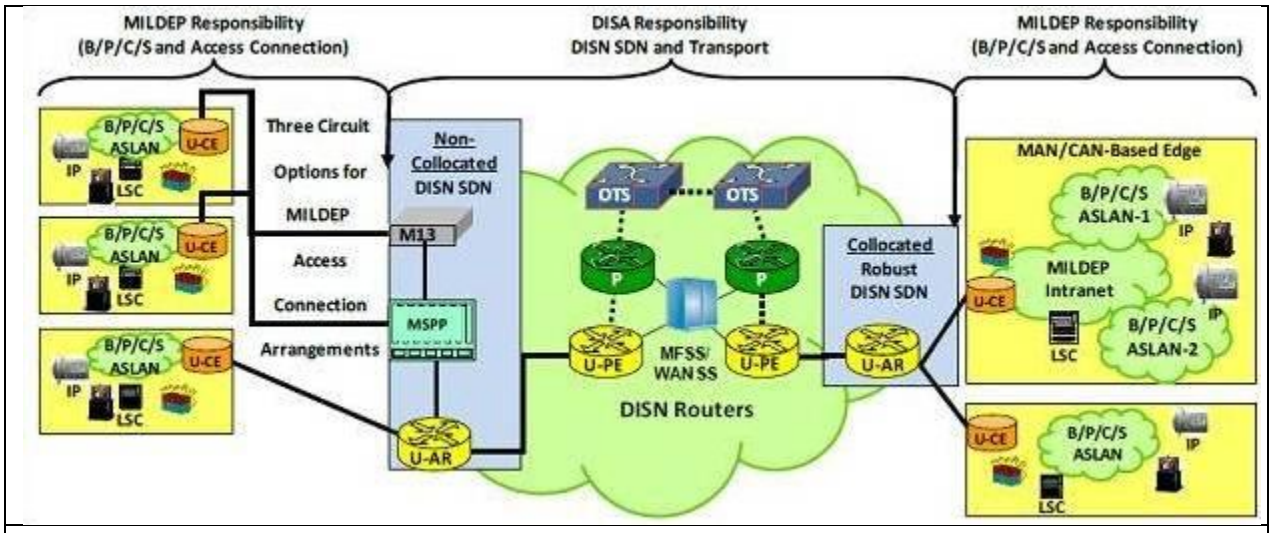


**LEGEND:**

| | | | |
|---|---|---|---|
| ASLAN | Assured Services Local Area Network | MILDEP | Military Department |
| B/P/C/S | Base, Post, Camp, Station | MSPP | Multi-Service Provisioning Platform |
| CAN | Campus Area Network | OTS | Optical Transport System |
| DISA | Defense Information Systems Agency | P | Provider |
| DISN | Defense Information System Network | SDN | Service Delivery Node |
| IP | Internet Protocol | SS | Softswitch |
| LSC | Local Session Controller | U-AR | Unclassified Aggregation Router |
| M13 | Multiplexer | U-CE | Unclassified Customer Edge Router |
| MAN | Metropolitan Area Network | U-PE | Unclassified Provider Edge Router |
| MFSS | Multifunction Softswitch | WAN | Wide Area Network |

**Figure 2-2. UC Network Architecture**

**7. INTEROPERABILITY REQUIREMENTS.** The interface, Capability Requirements (CR) and Functional Requirements (FR), Information Assurance (IA), and other requirements for LSCs are established by Sections 5.3.2, 5.3.4, 5.3.5, and 5.4 of Reference (c).

**7.1 Interfaces.** The SUT uses the external interfaces to connect to the Global Information Grid network and other UC products. Table 2-1, shows the physical interfaces supported by the SUT. The table documents the physical interfaces and the associated standards.

## Table 2-1. SUT Interface Requirements

| Interface | Critical | UCR Reference | Criteria[1] | Remarks |
|---|---|---|---|---|
| **Line Interfaces** | | | | |
| 10Base-X | Yes | 5.3.2.6.3 | Support minimum threshold CRs/FRs (2, 4,10, 13, and 16) and meet interface criteria for 802.3i and 802.3j | |
| 100Base-X | Yes | 5.3.2.6.3 | Support minimum threshold CRs/FRs (2, 4,10, 13, and 16) and meet interface criteria for 802.3.u | |
| 1000Base-X | No | 5.3.2.6.3 | Support minimum threshold CRs/FRs (2, 4, 10, 13, and 16) and meet interface criteria for 802.3z. | |
| 2-wire analog | Yes | 5.3.2.6.1.6 | Support minimum threshold CRs/FRs (2, 4, 10, and 13) and meet interface criteria for analog. | |
| ISDN BRI | No (LSC), Yes (SMEO) | 5.3.2.6.1.8 | Support minimum threshold CRs/FRs (2, 4, 10, and 13) and meet interface criteria for BRI | |
| **External Interfaces** | | | | |
| 10Base-X | No[2] | 5.3.2.4.2 | Support minimum threshold CRs/FRs (1, 2, 3, 6, 7, 8, 10, 11, 13, 15, and 16) and meet interface criteria for 802.3i and 802.3j | |
| 100Base-X | No[2] | 5.3.2.4.2 | Support minimum threshold CRs/FRs (1, 2, 3, 6, 7, 8, 10, 11, 13, 15, and 16) and meet interface criteria for 802.3u | |
| 1000Base-X | No[2] | 5.3.2.4.2 | Support minimum threshold CRs/FRs (1, 2, 3, 6, 7, 8, 10, 11, 13, 15, and 16)and meet interface criteria for 802.3z | |
| ISDN T1 PRI ANSI T1.619a | Yes | 5.3.2.4.3 | Support minimum threshold CRs/FRs (2, 3, 7, 8, 10, and 13) and meet interface criteria for ISDN T1 PRI (T1.619a) | Provides legacy DSN and TELEPORT connectivity. |
| ISDN T1 PRI NI-2 | Yes | 5.3.2.4.3 | Support minimum threshold CRs/FRs (2, 3, 7, 8, 10, and 13)and meet interface criteria for ISDN T1 PRI (NI-2) | Provides PSTN Connectivity. |
| T1 CCS7 ANSI T1.619a | No | 5.3.2.12.9 | Support minimum threshold CRs/FRs (2, 3, 7, 8, 10, and 13) and meet interface criteria for T1 CCS7 (ANSI T1.619a) | |
| T1 CAS | No (LSC), Yes (SMEO) | 5.3.2.12.11 | Support minimum threshold CRs/FRs (2, 3, 7, 8, 10, and 13) and meet interface criteria for T1 CAS | T1 CAS with MLPP. |
| E1 CAS | No (LSC), Yes (SMEO) | 5.3.2.12.11 | Support minimum threshold CRs/FRs (2, 3, 7, 8, 10, and 13) and meet interface criteria for T1 CAS | E1 CAS with MLPP. |
| E1 PRI ITU-T Q.955.3 | No | 5.3.2.12.10 | Support minimum threshold CRs/FRs (2, 3, 7, 8, 10, and 13)and meet interface criteria for EI PRI (Q.955.3) | Conditionally required for DSN European connectivity. |
| E1 PRI ITU-T Q.931 | No | 5.3.2.12.10 | Support minimum threshold CRs/FRs (2, 3, 7, 8, 10, and 13)and meet interface criteria for E1 PRI (ITU-T Q.931) | Conditionally required for commercial European connectivity. |
| **NM** | | | | |
| 10Base-X | No[2] | 5.3.2.4.4 5.3.2.7.2.8 | Support minimum threshold CR/FRs (16 and 17) and meet interface criteria for 802.3i and 802.3j | |
| 100Base-X | No[2] | 5.3.2.4.4 5.3.2.7.2.8 | Support minimum threshold CR/FRs (16 and 17) and meet interface criteria for 802.3u | |

## Table 2-1. SUT Interface Requirements (continued)

**NOTES:**
1. CR/FR requirements are contained in Table 2-2. CR/FR numbers represent a roll-up of UCR requirements. Enclosure 3 provides a list of more detailed requirements for security device products.
2. Must provide a minimum of one of the listed interfaces.

**LEGEND:**

| | | | |
|---|---|---|---|
| ANSI | American National Standards Institute | ITU-T | International Telecommunication Union Telecommunication Standardization Sector |
| BRI | Basic Rate Interface | | |
| CR | Capability Requirement | LSC | Local Session Controller |
| CCS7 | Common Channel Signaling | Mbps | Megabits per second |
| DSN | Defense Switched Network | MLPP | Multi-Level Precedence and Preemption |
| E1 | European Basic Multiplex Rate (2.048 Mbps) | NI-2 | National ISDN Standard 2 |
| | | PRI | Primary Rate Interface |
| FR | Functional Requirement | PSTN | Public Switched Telephone Network |
| ISDN | Integrated Services Digital Network | SMEO | Small End Office |
| | | T1 | Digital Transmission Link Level 1 (1.544 Mbps) |
| | | UCR | Unified Capabilities Requirements |

**7.2 CRs and FRs.** The LSCs have required and conditional features and capabilities that are established by Sections 5.3.2, 5.3.4, 5.3.5, and 5.4 of the Unified Capabilities Requirements (UCR). The SUT does not need to provide non-critical (conditional) requirements. If they are provided, they must function according to the specified requirements. The SUTs features and capabilities and its aggregated requirements are listed in Table 2-2. Detailed CR/FR requirements are provided in Table 3-1 of Enclosure 3.

## Table 2-2. SUT CRs and FRs

| CR/FR ID | Capability/Function | Applicability[1] | UCR Reference[2] | Criteria |
|---|---|---|---|---|
| 1 | **Assured Services Product Features and Capabilities** | | | |
| | DSCP Packet Marking | Required | 5.3.2.2.1.4 | |
| | Voice Features and Capabilities | Required | 5.3.2.2.2.1 | |
| | Public Safety Features | Required | 5.3.2.2.2.2 | |
| | ASAC – Open Loop | Required | 5.3.2.2.3 | |
| | Signaling Protocols | Required | 5.3.2.2.2.3 | |
| | Signaling Performance | Required | 5.3.2.2.4 | |
| 2 | **Registration, Authentication, and Failover** | | | |
| | Registration | Required | 5.3.2.3.1 | |
| | Failover | Required | 5.3.2.3.2 | |
| 3 | **Product Physical, Quality, and Environmental Factors** | | | |
| | Availability | Required | 5.3.2.5.2.1 | |
| | Maximum Downtimes | Required | 5.3.2.5.2.2 | |
| | Loss of Packets | Required[3] | 5.3.2.5.4 | |
| 4 | **Voice End Instruments** | | | |
| | Tones and Announcements | Required | 5.3.2.6.1.1 | |
| | Audio Codecs | Required | 5.3.2.6.1.2 | |
| | VoIP PEI or AEI Audio Performance Requirements | Required | 5.3.2.6.1.3 | |
| | VoIP Sampling Standard | Required | 5.3.2.6.1.4 | |
| | Authentication To LSC | Required | 5.3.2.6.1.5 | |
| | Analog Telephone Support | Required[4] | 5.3.2.6.1.6 | |
| | Softphones | Conditional | 5.3.2.6.1.7 | |
| | ISDN BRI | Conditional | 5.3.2.6.1.8 | |

## Table 2-2. SUT CRs and FRs (continued)

| CR/FR ID | Capability/Function | Applicability[1] | UCR Reference[2] | Criteria |
|---|---|---|---|---|
| 5 | **Video End Instruments** | | | |
| | Video End Instrument | Required | 5.3.2.6.2 | |
| | Display Messages, Tones, and Announcements | Required | 5.3.2.6.2.1 | |
| | Video Codecs (Including Associated Audio Codecs) | Required | 5.3.2.6.2.2 | |
| 6 | **LSC Requirements** | | | |
| | PBAS/ASAC Requirements | Required | 5.3.2.7.2.1 | |
| | Calling Number Delivery Requirements | Required | 5.3.2.7.2.2 | |
| | LSC Signaling Requirements | Required | 5.3.2.7.2.3 | |
| | Service Requirements under Total Loss of WAN Transport | Required | 5.3.2.7.2.4 | |
| | Local Location Server and Directory | Required | 5.3.2.7.2.5 | |
| | LSC Transport Interface Functions | Required | 5.3.2.7.2.7 | |
| | LSC to PEI, AEI, and Operator Console Status Verification | Required | 5.3.2.7.2.10 | |
| | Line-Side Custom Features Interference | Conditional | 5.3.2.7.2.11 | |
| | Loop Avoidance | Required[3] | 5.3.2.7.3 | |
| 7 | **Call Connection Agent Requirements** | | | |
| | CCA IWF Component | Required[5] | 5.3.2.9.2.1 | |
| | CCA MGC Component | Required[5] | 5.3.2.9.2.2 | |
| | SG Component | Conditional | 5.3.2.9.2.3 | |
| | CCA-IWF Support for AS-SIP | Required | 5.3.2.9.5.1 | |
| | CCA-IWF Support for SS7 | Conditional | 5.3.2.9.5.2 | |
| | CCA-IWF Support for PRI via MG | Required | 5.3.2.9.5.3 | |
| | CCA-IWF Support for CAS Trunks via MG | Conditional | 5.3.2.9.5.4 | |
| | CCA-IWF Support for PEI and AEI Signaling Protocols | Required | 5.3.2.9.5.5 | |
| | CCA-IWF Support for VoIP and TDM Protocol Interworking | Required[5] | 5.3.2.9.5.6 | |
| | CCA Preservation of Call Ringing State during Failure Conditions | Required | 5.3.2.9.6 | |
| | CCA Interactions with Transport Interface Functions | Required | 5.3.2.10.3 | |
| | CCA Interactions with the EBC | Required | 5.3.2.10.4 | |
| | CCA Support for Admission Control | Required | 5.3.2.10.5 | |
| | CCA Support for UFS | Required | 5.3.2.10.6 | |
| | CCA Support for IA | Required | 5.3.2.10.7 | |
| | CCA Interaction with EIs | Required | 5.3.2.10.10 | |
| | CCA Support for AS Voice and Video | Required | 5.3.2.10.11 | |
| | CCA Interactions with Service Control Functions | Required | 5.3.2.10.12 | |
| | CCA Interworking between AS-SIP and SS7 | Conditional | 5.3.2.11 | |

## Table 2-2. SUT CRs and FRs (continued)

| CR/FR ID | Capability/Function | Applicability[1] | UCR Reference[2] | Criteria |
|---|---|---|---|---|
| 8 | **MG Requirements** | | | |
| | Role of MG In LSC | Required | 5.3.2.12.3.1 | |
| | MG Support for ASAC | Required | 5.3.2.12.4.1 | |
| | MG and IA Functions | Required | 5.3.2.12.4.2 | |
| | MG Interaction with Service Control Function | Required | 5.3.2.12.4.3 | |
| | MG Interactions with IP Transport Interface Functions | Required | 5.3.2.12.4.4 | |
| | MG-EBC interactions | Required | 5.3.2.12.4.5 | |
| | MG IP-Based PSTN Interface Requirements | Conditional | 5.3.2.12.4.7 | |
| | MG Interaction with EIs | Required | 5.3.2.12.4.8 | |
| | MG support for User Features and Services | Required | 5.3.2.12.4.9 | |
| | MG Interface to TDM | Required[6] | 5.3.2.12.5 | |
| | MG Interface to TDM Allied and Coalition | Conditional | 5.3.2.12.6 | |
| | MG Interface to TDM PSTN in US | Required[6] | 5.3.2.12.7 | |
| | MG Interfaces to TDM PSTN OCONUS | Required[6,7] | 5.3.2.12.8 | |
| | MG Support for CCS7 | Conditional | 5.3.2.12.9 | |
| | MG Support for ISDN PRI Trunks | Required | 5.3.2.12.10 | |
| | MG Support for CAS Trunks | Required | 5.3.2.12.11 | |
| | MG requirements for VoIP Internal Interfaces | Required | 5.3.2.12.12 | |
| | MG Echo Cancellation | Required | 5.3.2.12.13 | |
| | MG Clock Timing | Required | 5.3.2.12.14 | |
| | MGC-MG CCA Functions | Required | 5.3.2.12.15 | |
| | MG V.150.1 | Required | 5.3.2.12.16 | |
| | MG Preservation of Call Ringing during Failure | Required[3] | 5.3.2.12.17 | |
| 9 | **SG Requirements** | | | |
| | SG and CCS7 network Interactions | Conditional | 5.3.2.13.5.1 | |
| | SG Interactions with CCA | Conditional | 5.3.2.13.5.2 | |
| | SG Interworking Functions | Conditional | 5.3.2.13.5.3 | |
| 10 | **WWNDP Requirements** | | | |
| | WWNDP | Required | 5.3.2.16 | |
| | DSN WWNDP | Required | 5.3.2.16.1 | |
| 11 | **Commercial Cost Avoidance** | | | |
| | Commercial Cost Avoidance | Required[3] | 5.3.2.23 | |
| 12 | **AS-SIP Based for External Devices (Voicemail, Unified Messaging, and Automated Receiving Devices)** | | | |
| | AS-SIP Requirements for External Interfaces | Conditional | 5.3.2.24 | |
| 13 | **Precedence Call Diversion** | | | |
| | Precedence Call Diversion | Required | 5.3.2.25 | |

## Table 2-2. SUT CRs and FRs (continued)

| CR/FR ID | Capability/Function | Applicability[1] | UCR Reference[2] | Criteria |
|---|---|---|---|---|
| 14 | **Attendant Station Features** | | | |
| | Precedence and Preemption | Required[3] | 5.3.2.26.1 | |
| | Call Display | Required[3] | 5.3.2.26.2 | |
| | Class of Service Override | Required[3] | 5.3.2.26.3 | |
| | Busy Override and Busy Verification | Required[3] | 5.3.2.26.4 | |
| | Night service | Required[3] | 5.3.2.26.5 | |
| | Automatic Recall of Attendant | Required[3] | 5.3.2.26.6 | |
| | Calls in Queue to the Attendant | Required[3] | 5.3.2.26.7 | |
| 15 | **AS-SIP Requirements** | | | |
| | SIP Requirements for AS-SIP Signaling Appliances and AS-SIP EIs | Required[3] | 5.3.4.7 | |
| | SIP Session Keep-Alive Timer | Required | 5.3.4.8 | |
| | Session Description Protocol | Required | 5.3.4.9 | |
| | Precedence and Preemption | Required | 5.3.4.10 | |
| | Video Telephony – General Rules | Required | 5.3.4.12 | |
| | Calling Services | Required | 5.3.4.13 | |
| | SIP Translation Requirements for Inter-working AS-SIP Signaling Appliances | Required | 5.3.4.14 | |
| | Relevant Timers for the Terminating Gateway and the Originating Gateway | Required | 5.3.4.15 | |
| | SIP Requirements for Interworking AS-SIP Signaling Appliances | Required | 5.3.4.16 | |
| | Keep-Alive Timer Requirements for Interworking AS-SIP Signaling Appliances | Required | 5.3.4.17 | |
| | Precedence and Preemption Extensions for Interworking AS-SIP Signaling Appliances | Required | 5.3.4.18 | |
| | Supplementary Services | Required | 5.3.4.19 | |

## Table 2-2. SUT CRs and FRs (continued)

| CR/FR ID | Capability/Function | Applicability[1] | UCR Reference[2] | Criteria |
|---|---|---|---|---|
| 16 | **IPv6 Requirements** | | | |
| | Product Requirements | Required | 5.3.5.4 | |
| 17 | **NM Requirements (LSC)** | | | |
| | LSC Management Function | Required | 5.3.2.7.2.6 | |
| | VVoIP NMS Interface Requirements | Required | 5.3.2.4.4 | |
| | General Management requirements | Required | 5.3.2.17.2 | |
| | Requirement for FCAPS Management | Required | 5.3.2.17.3 | |
| | NM requirements of Appliance Functions | Required | 5.3.2.18 | |
| | Accounting Management | Required | 5.3.2.19 | |
| 18 | **NM Requirements (SMEO)** | | | |
| | Physical Interface to ADIMSS | Required | 5.2.8.1 | |
| | Measurements and Data Generation | Required | 5.2.8.2 | |
| | Fault Management | Required | 5.2.8.3 | |
| | Configuration Management | Required | 5.2.8.4 | |
| | Automated Message Accounting | Required | 5.2.8.5 | |
| | Performance Management | Required | 5.2.8.6 | |

**NOTES:**
1. Annotation of 'required' refers to high level requirement category. Applicability of each sub-requirement is provided in Enclosure 3.
2. Detailed requirements and associated criteria for LSC s are listed in Table 3-1 of Enclosure 3.
3. This requirement represents a new UCR requirement for which the vendor has 18-months (July 2011) to comply.
4. The UCR 2008 Change 1 added 18-month rule for G.711 and V.150.1 IAD support.
5. The LSC must meet T1 PRI (ANSI T1.619a and NI-2) CCA IWF. The T1 CAS and T1 CCS7 CCA IWF are conditional.
6. The LSC must meet TDM requirements for T1 PRI (ANSI T1.619a and NI-2). The TDM requirements for T1 CAS and T1 CCS7 are conditional.
7. The E1 requirements for OCONUS are conditionally required for deployments in Europe.

## Table 2-2. SUT CRs and FRs (continued)

**LEGEND:**

| | |
|---|---|
| AEI | AS-SIP En Instrument |
| AS | Assured Services |
| AS-SIP | Assured Services Session Initiation Protocol |
| BRI | Basic Rate Interface |
| C2 | Command and Control |
| CAS | Channel Associated Signaling |
| CCA | Call Connection Agent |
| CR | Capabilities Requirement |
| CCS7 | Common Channel Signaling |
| DHCP | Dynamic Host Configuration Protocol |
| DISA | Defense Information Systems Agency |
| DSCP | Differentiated Services Code Point |
| DSN | Defense Switched Network |
| EBC | Edge Boarder Controller |
| EI | End Instrument |
| FCAPS | Fault, Configuration, Accounting, Performance and Security |
| FR | Functional Requirement |
| G.711 | Standard for PCM of Voice Frequencies |
| IA | Information Assurance |
| IAD | Integrated Access Device |
| IP | Internet Protocol |
| ID | Identification |
| ISDN | Integrated Services Digital Network |
| IEEE | Institute of Electrical and Electronics Engineers, Inc. |
| IP | Internet Protocol |
| IPv6 | Internet Protocol version 6 |
| IWF | Interworking Function |
| JITC | Joint Interoperability Test Command |
| LoC | Letter of Compliance |
| LSC | Local Session Controller |
| Mbps | Megabits per second |
| MG | Media Gateway |
| MGC | Media Gateway Controller |
| MFSS | Multi-Function Soft Switch |
| MLPP | Multilevel Precedence and Preemption |
| NI-2 | National ISDN Standard 2 |
| NM | Network Management |
| NMS | Network Management System |
| OCONUS | Outside the Continental United States |
| PBAS | Precedence Based Assured Services |
| PEI | Proprietary End Instrument |
| PoAM | Plan of Action and Milestones |
| PRI | Primary Rate Interface |
| PSTN | Public Switched Telephone Network |
| SG | Signaling Gateway |
| SIP | Session Initiation Protocol |
| SS7 | Signaling System 7 |
| SUT | System Under Test |
| T1 | Digital Transmission Link Level 1 (1.544 Mbps) |
| T1.619a | SS7 and ISDN MLPP Signaling Standard for T1 |
| TDM | Time Division Multiplexing |
| TDR | Test Discrepancy Report(s) |
| UCR | Unified Capabilities Requirements |
| UFS | User Features and Services |
| U.S. | United States |
| VoIP | Voice over Internet Protocol |
| WAN | Wide Area Network |
| WWNDP | Worldwide Numbering and Dialing Plan |

**7.3 Information Assurance (IA).** Table 2-3 details the IA requirements applicable to the SUT.

## Table 2-3. SUT IA Requirements

| Requirement | Applicability (See note.) | UCR Reference | Criteria |
|---|---|---|---|
| General Requirements | Required | 5.4.6.2 | Detailed IA requirements and associated criteria for the SUT are listed in Reference (c) Section 5.4. Detailed test procedures were conducted using the IATP. |
| Authentication | Required | 5.4.6.2.1 | |
| Integrity | Required | 5.4.6.2.2 | |
| Confidentiality | Required | 5.4.6.2.3 | |
| Non-Repudiation | Required | 5.4.6.2.4 | |
| Availability | Required | 5.4.6.2.5 | |

**NOTE:** The annotation of 'required' refers to a high-level requirement category. Detailed IA requirements are included in Reference (c) section 5.4.

**LEGEND:**

| | |
|---|---|
| IA | Information Assurance |
| IATP | IA Test Plan |
| LSC | Local Session Controller |
| UCR | Unified capabilities Requirements |

**7.4 Other.** None.

**8. TEST NETWORK DESCRIPTION.** The SUT was tested at the JITC, Fort Huachuca, Arizona in a manner and configuration similar to that of an operational environment. Figure 2-3 depicts the SUTs minimum LSC notional test architecture. Testing the SUTs required functions and features for an LSC and Small End Office (SMEO) were conducted using the test configuration depicted in Figures 2-4.

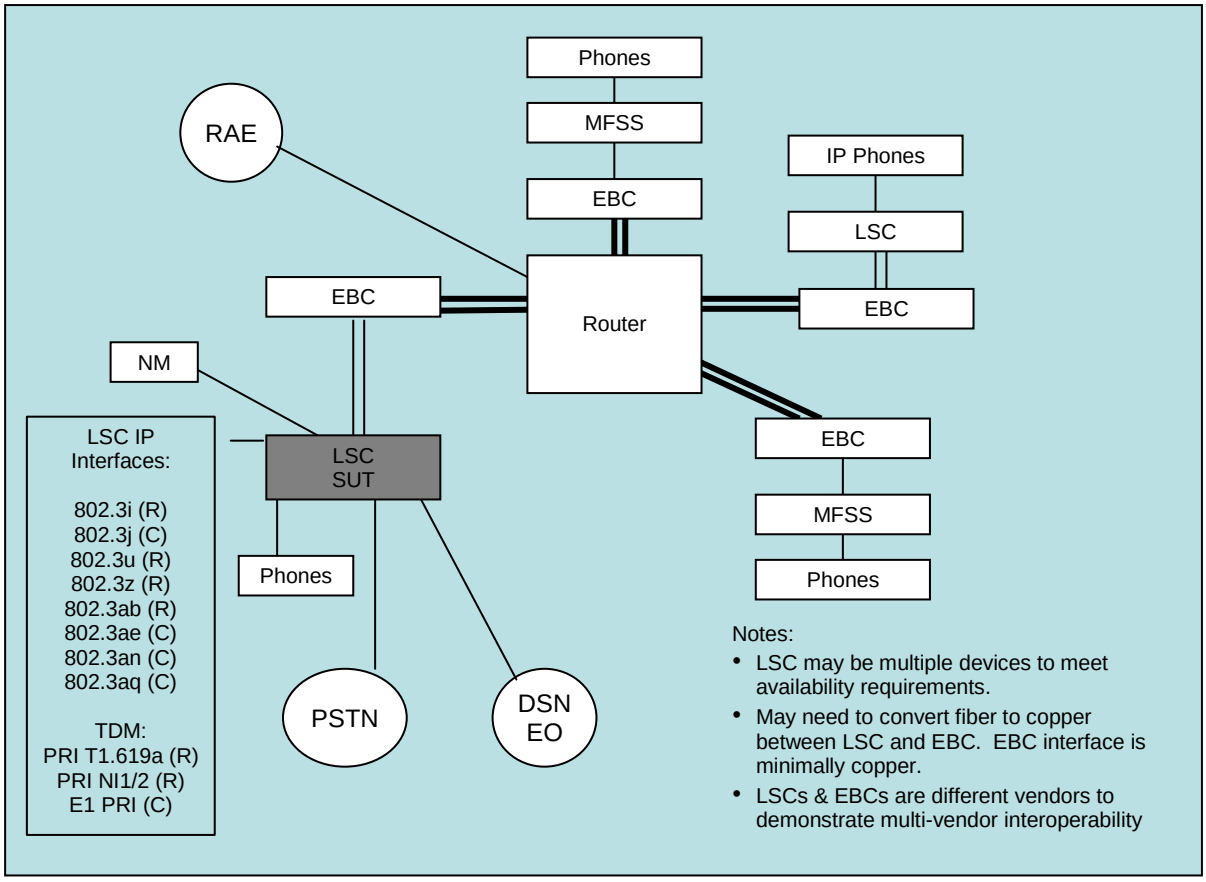


**LEGEND:**

| | | | |
|---|---|---|---|
| C | Conditional | NI 1/2 | National ISDN Standard 1 or 2 |
| DSN | Defense Switched Network | NM | Network Management |
| EBC | Edge Boundary Controller | PRI | Primary Rate Interface |
| E1 | European Basic Multiplex Rate (2.048 Mbps) | PSTN | Public Switched Telephone Network |
| EO | End Office | R | Required |
| IP | Internet Protocol | RAE | Required Ancillary Equipment |
| ISDN | Integrated Services Digital Network | SUT | System Under Test |
| LSC | Local Session Controller | T1 | Digital Transmission Link Level 1 (1.544 Mbps) |
| Mbps | Megabits per second | T1.619a | SS7 and ISDN MLPP Signaling Standard for T1 |
| MFSS | Multifunction Softswitch | TDM | Time Division Multiplexing |
| MLPP | Multi-Level Precedence and Preemption | | |

**Figure 2-3. LSC Notional Minimum Test Architecture**

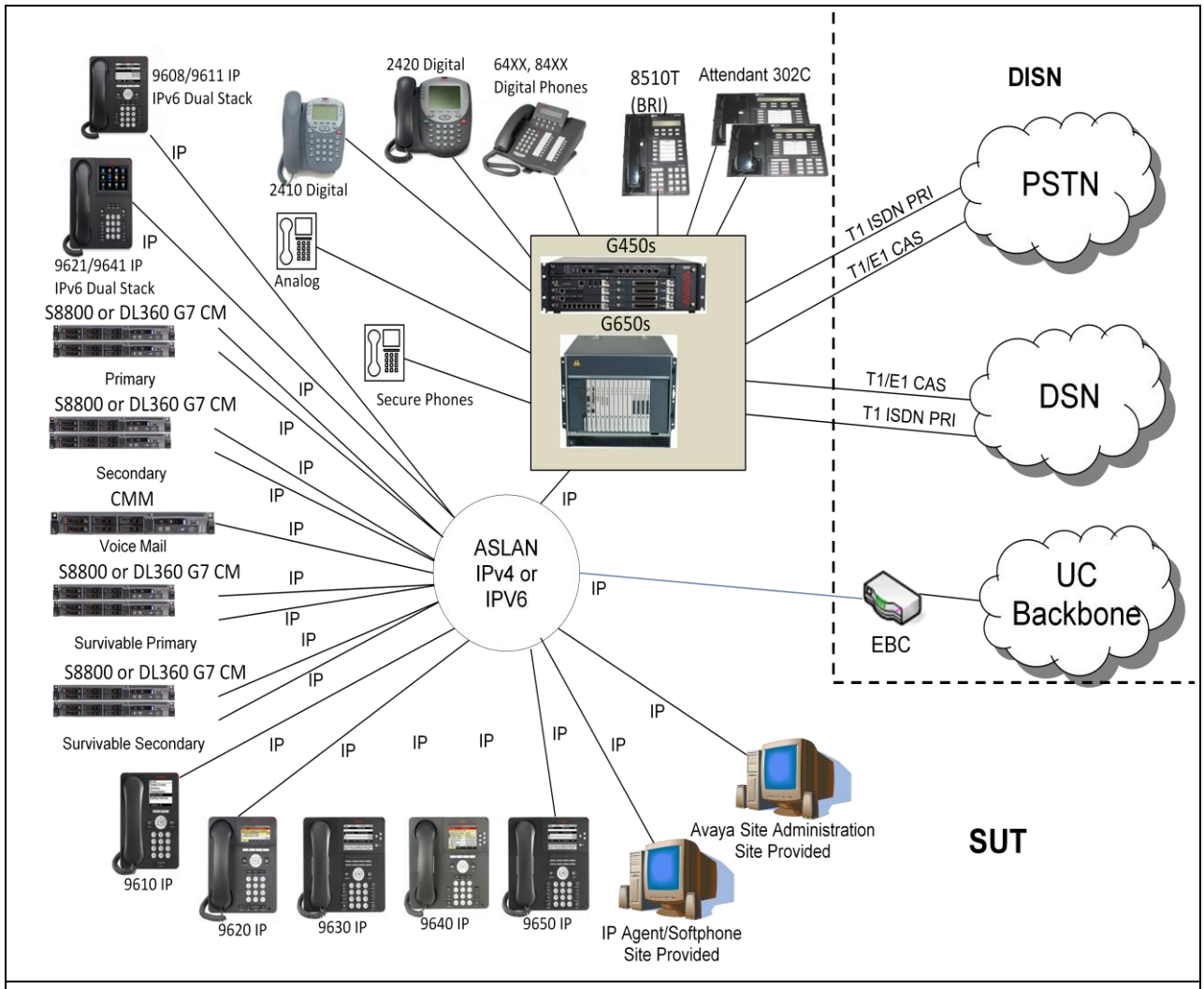


**LEGEND:**

| | | | |
|---|---|---|---|
| ASLAN | Assured Services Local Area Network | IP | Internet Protocol |
| CAS | Channel Associated Signaling | PSTN | Public Switch Telephone Network |
| CM | Communication Manager | PRI | Primary Rate Interface |
| DISN | Defense Information System Network | SUT | System Under Test |
| DSN | Defense Switched Network | T1 | Digital Transmission Link Level 1 (1.544 Mbps) |
| EBC | Edge Boundary Controller | UC | Unified Capabilities |
| G | Gateway | | |

**Figure 2-4. SUT Test Configuration**

**9. SYSTEM CONFIGURATIONS.** Table 2-4 provides the system configurations and hardware and software components tested with the SUT. The SUT was tested in an operationally realistic environment to determine its interoperability capability with associated network devices and network traffic.

## Table 2-4. SUT Tested System Configurations

| System Name | Software Release |
|---|---|
| Avaya CS2100 w/ AS5300 (MFSS) | CS2100 Release SE09.1 w/AS5300 Release 2.0 (Patch Bulletin 12) |
| Avaya AS5300 (LSC) | AS5300 Release 2.0 (Patch Bulletin 12) |
| Cisco Unified Communications Manager LSC | 8.0 (2) with Gateway IOS 15.1.(1)T |
| Nokia Siemens Networks HiQ8000 | Software Release 13.90.02.10 Patch Set (PS) 14, Patch (P) 102 |

| Component | | Hardware | OS/Software | | Firmware/Software |
|---|---|---|---|---|---|
| SUT | Avaya Aura CM (Communication Manager) 6.0.11 (00.1.510.1 Service Pack 19211) | CMM (IPv4 & IPv6) | Core | CentOS | 5.4 |
| | | | Virtual Controller | XEN Hypervisor | 3.4.2 |
| | | | Virtual Machine | CDOM CentOS | 5.4 |
| | | | | Tomcat | 6.0.29 |
| | | | Virtual Machine | CMM Redhat Linux | 5.3 |
| | | | | Apache | 2.2.3 |
| | | Avaya S8800, HP DL360 G7[1] CM SVR-1 (IPv4 & IPv6) | Core | CentOS | 5.4 |
| | | | Virtual Controller | XEN Hypervisor | 3.4.2 |
| | | | Virtual Machine | CDOM CentOS | 5.4 |
| | | | | Tomcat | 6.0.29 |
| | | | Virtual Machine | Redhat Linux | 5.3 |
| | | | | Apache | 2.2.3 |
| | | Avaya S8800, HP DL360 G7[1] CM SVR-2 (IPv4 & IPv6) | Core | CentOS | 5.4 |
| | | | Virtual Controller | XEN Hypervisor | 3.4.2 |
| | | | Virtual Machine | CDOM CentOS | 5.4 |
| | | | | Tomcat | 6.0.29 |
| | | | Virtual Machine | Redhat Linux | 5.3 |
| | | | | Apache | 2.2.3 |
| | | Avaya S8800, HP DL360 G7[1] CM Surv Core-1 (IPv4 & IPv6) | Core | CentOS | 5.4 |
| | | | Virtual Controller | XEN Hypervisor | 3.4.2 |
| | | | Virtual Machine | CDOM CentOS | 5.4 |
| | | | | Tomcat | 6.0.29 |
| | | | Virtual Machine | Redhat Linux | 5.3 |
| | | | | Apache | 2.2.3 |
| | | Avaya S8800, HP DL360 G7[1] CM Surv Core-2 (IPv4 & IPv6) | Core | CentOS | 5.4 |
| | | | Virtual Controller | XEN Hypervisor | 3.4.2 |
| | | | Virtual Machine | CDOM CentOS | 5.4 |
| | | | | Tomcat | 6.0.29 |
| | | | Virtual Machine | Redhat Linux | 5.3 |
| | | | | Apache | 2.2.3 |
| | | G450-1 (IPv4 and IPv6) | MM710 | VxWorks 6.8 Firmware g450_sw_31_17_2 | HW11, FW050 |
| | | | MM712 | | HW07, FW011 |
| | | | MM716 | | HW06, FW094 |
| | | | MM720 | | HW06, FW08 |
| | | G450-2 (IPv4 and IPv6) | MM710 | VxWorks 6.8 Firmware g450_sw_31_17_2 | HW11, FW050 |
| | | | MM711 | | HW33, FW094 |
| | | | MM717 | | HW11, FW05 |
| | | | MM720 | | HW06, FW08 |
| | | G450-3 (IPv4 and IPv6) | MM710 | VxWorks 6.8 Firmware g450_sw_31_17_2 | HW11, FW050 |
| | | | MM716 | | HW06, FW094 |
| | | | MM717 | | HW05, FW011 |

## Table 2-4. SUT Tested System Configurations (Continued)

| Component | | Hardware | OS/Software | | Firmware/Software |
|---|---|---|---|---|---|
| SUT | Avaya Aura CM (Communication Manager) 6.0.11 (00.1.510.1 Service Pack 19211) continued | G650-1 (IPv4 Only) [2] | TN2312BP | N/A | HW36, FW050 |
| | | | TN799DP | | HW16, FW037 |
| | | | TN793CP | | HW17, FW010 |
| | | | TN2224CP | | HW11, FW05 |
| | | | TN2602AP | | HW28, FW054 |
| | | | TN464HP | | HW04, FW019 |
| | | | TN464HP | | HW13, FW024 |
| | | | TN464HP | | HW13, FW024 |
| | | G650-2 (IPv4 Only) [2] | TN2312BP | N/A | HW36, FW050 |
| | | | TN799DP | | HW16, FW037 |
| | | | TN793CP | | HW17, FW010 |
| | | | TN2602AP | | HW28, FW010 |
| | | | TN464GP | | HW06, FW019 |
| | | | TN464GP | | HW13, FW024 |
| | | | TN464GP | | HW13, FW024 |
| | | Avaya Site Administration-1 (IPv4 Only) | Windows XP SP3 | Avaya Site Administration | 4.0 |
| | | | | Version | 4.0.12 |
| | | Avaya Site Administration-2 (IPv4 Only) | Windows Vista SP2 | Avaya Site Administration | 6.0 |
| | | | | Version | 6.0.07 |
| | | IP Agent-2 (IPv4 Only) | Windows XP SP3 | Avaya One-X Communicator | R5.2300-SP3-22584 |
| | | | | Product Version | 5.2.0.8 |
| | | | | Signaling Protocol | H.323 |
| | | | | .NET | 3.5 SP1 |
| | | IP Agent-1 (IPv4 Only) | Windows Vista SP2 | Avaya One-X Communicator | R5.2300-SP3-22584 |
| | | | | Product Version | 5.2.0.18 |
| | | | | Signaling Protocol | H.323 |
| | | | | .NET | 3.5 SP1 |

| Telephones, Voicemail, and Conference Bridge Components | | |
|---|---|---|
| **Interface Type** | **Model** | **Firmware** |
| H.323 IPv4 & IPv6 | 9641, 9621 | S9621_41HALBR6_0_16T_V452.var |
| H.323 IPv4 & IPv6 | 9608, 9611 | S9608_11HALBR6_0_16T_V452.var |
| H.323 IPv4 Only | 9610 | ha96xxua3_0_21r02St.bin |
| H.323 IPv4 Only | 9620, 9620L, 9620C | ha96xxua3_0_21r02St.bin |
| H.323 IPv4 Only | 9630 | ha96xxua3_0_21r02St.bin |
| H.323 IPv4 Only | 9640 | ha96xxua3_0_21r02St.bin |
| H.323 IPv4 Only | 9650 | ha96xxua3_0_21r02St.bin |
| Secure Phones (Analog) | GD ViPer (PSTN) | 2.12 |
| | GD Sectera Wireline Terminal | 12.05 |
| | L3 Omni | 6.01 |
| | L3 STE | 2.7 |
| Secure Phone (BRI) | L3 STE | 2.7 |
| 2-Wire Analog | Panasonic KX-TS15-W | NA |
| 2-Wire Digital Proprietary | 6402D, 2420, 6408D, 6416D+M, 6402, 8410D | NA |
| Attendant Console | 302C | NA |
| ISDN BRI | Avaya 8510T | NA |
| | Tone Commander phones : 6210U, 6210T, 6220U, 6220T, and 6220T TSG | 01.07.22 |

**Table 2-4. SUT Tested System Configurations (Continued)**

**Notes:**
1. The SUT was tested with the Avaya S8800 Core server. JITC analysis determined that the Hewlett Packard DL-360 G7 is exactly the same as the S8800 Core servers with the exception of a faster central processing unit and it is similar to the S8800 for interoperability purposes and it is also certified for joint use.
2. The SUT G650 gateways are IPv4 only. The G450 gateways provided IPv4 to IPv6 intra- and inter-switch translations between dual stack phones and components and non IPv6 components.

**Legend:**

| | | | |
|---|---|---|---|
| CM | Communication Manager | MM | Media Module |
| CMM | Communication Manager Messenger | OS | Operating System |
| FW | Firmware | SP | Service Pack |
| G | Gateway | SUT | System Under Test |
| HW | Hardware | Surv | Survivability |
| IP | Internet Protocol | SVR | Server |

**10. TESTING LIMITATIONS.** The JITC test team noted the following testing limitations including the impact they may have on interpretation of the results and conclusions. Any untested requirements are also included in the testing limitations.

**a. Call Loading.** Due to limitations in test equipment the JITC could not create a large volume of line and trunk calls to simulate operational traffic loads. This is issue will be resolved in the near future to allow for simulated call loads during interoperability certification testing. The use of operational data as the SUT is fielded will validate the SUTs ability to support its proposed number of subscribers (up to 125,000 per engineer documentation).

**b. AS-SIP End Instruments (AEI).** The JITC did not test the SUT with generic AEI because no AEI have been submitted for testing or exist on the Unified Capabilities Approved Product List. Furthermore the SUT does not support AS-SIP line interfaces.

**c. Proprietary End Instruments (PEI).** The JITC did not test PEIs for video requirements. Since the DSN has not deployed videophones under legacy certifications, this poses a minor operational impact.

**d. Network Management (NM).** The JITC did not test the SUTs Unified Capabilities NM requirements. The vendor did submit an NM LoC that was reviewed by JITC. The JITC's evaluation of the SUT's NM capabilities and DISA adjudication results are provided in paragraph 11.

**e. Master/Slave.** The SUT was tested in a standalone LSC configuration and the SUT's ability to meet master/slave requirements was not tested. Initial fielding of an LSC will not be used in this configuration. The operational impact was adjudicated to be minor.

**f. Secure Data and Secure Voice Calls.** The standard for modem over IP is based on ITU-T V.150.1. Secure calls were tested inter-enclave (between LSCs via the DISN). The SUT does not support V.150.1 on its media gateways G450 and G650. In Accordance with UCR 2008 change 1, V.150.1 is a new requirement and the vendor

has 18 months to develop (July 2011). The SUT was under test prior to the 18 month expiration period.

**11. INTEROPERABILITY EVALUATION RESULTS.** The SUT meets the critical interoperability requirements for an LSC in accordance with the UCR and is certified for joint use with other UC Products listed on the APL. Additional discussion regarding specific testing results is located in subsequent paragraphs.

**11.1 Interfaces.** The SUT met line interface requirements for 10/100 Base-X interfaces. These IP line interfaces were met through use of PEIs (voice only). The SUT supports the following line and trunk interfaces on both the G450 and G650 gateways: Line (2-wire digital gateway, 2-wire analog, 2-wire (U), and 4-wire (S/T) Integrated Services Digital Network (ISDN) Basic Rate Interface, IP (ITU-T H.323) Interface), Trunk (10/100 Base-X (AS-SIP), T1 ISDN Primary Rate Interface (PRI) for both ANSI T1.619a MLPP and National ISDN-2 (NI-2, T1 Channel Associated Signaling (CAS), and E1 CAS). The interface status of the SUT is provided in Table 2-5.

**Table 2-5. SUT Interface Requirements Status**

| Interface | Critical | UCR Reference | Threshold CR/FR[1] | Status | Remarks[2] |
|---|---|---|---|---|---|
| **Line Interfaces** | | | | | |
| 10Base-X | Yes | 5.3.2.6.3 | 1, 2, 3, 4, 10, 13, and 16 | Certified | SUT met threshold CRs/FRs for IEEE 802.3i and 802.3j. Applies to PEIs (voice) and Softphone (voice). |
| 100Base-X | Yes | 5.3.2.6.3 | 1, 2, 3, 4, 10, 13, and 16 | Certified | SUT met threshold CRs/FRs for IEEE 802.3u with the SUT PEIs. |
| 1000Base-X | No | 5.3.2.6.3 | 1, 2, 3, 4, 10,13, and 16 | Not Tested | This interface is not offered by the SUT PEIs. |
| 2-wire analog | Yes | 5.3.2.6.1.6 | 1, 2, 3, 4, 10, and 13 | Certified | SUT met threshold CRs/FRs for 2-wire analog interfaces. |
| ISDN BRI[3] | No | 5.3.2.6.1.8 | 1, 2, 3, 4, 10, and 13 | Certified | SUT met threshold CRs/FRs for BRI interface with the. |
| Digital Proprietary | No | 5.2 | 1, 2, 3, 4, 10, and 13 | Certified | SUT met threshold CRs/FRs for Digital Proprietary interface. |
| **External Interfaces** | | | | | |
| 10Base-X | No | 5.3.2.4.2 | 1, 2, 3, 6, 7, 8, 10, 11, 13, 15, and 16 | Certified | Met threshold CRs/FRs for IEEE 802.3i and 802.3j for the AS-SIP trunk. |
| 100Base-X | No | 5.3.2.4.2 | 1, 2, 3, 6, 7, 8, 10, 11, 13, 15, and 16 | Certified | Met threshold CRs/FRs for IEEE 802.3u for the AS-SIP trunk. |
| 1000Base-X | No | 5.3.2.4.2 | 1, 2, 3, 6, 7, 8, 10, 11, 13, 15, and 16 | Not Tested | This interface is not offered by the SUT. |
| ISDN T1 PRI ANSI T1.619a | Yes | 5.3.2.4.3 | 2, 3, 7, 8, 10, and 13 | Certified | Met threshold CRs/FRs. This interface provides legacy DSN and TELEPORT connectivity. |
| ISDN T1 PRI NI-2 | Yes | 5.3.2.4.3 | 2, 3, 7, 8, 10, and 13 | Certified | Met threshold CRs/FRs. This interface provides PSTN connectivity. |
| T1 CCS7 ANSI T1.619a | No | 5.3.2.12.9 | 2 , 3, 7, 8, 10, and 13 | Not Tested | This interface is not offered by the SUT. |
| T1 CAS (DTMF[3], MFR1) | No | 5.3.2.12.11 | 2, 3, 7, 8, 10, and 13 | Certified | Met threshold CRs/FRs. This interface provides legacy DSN and TELEPORT connectivity with DTMF (Standard, ABCD) and Multi-frequency R1 digit formats. |

## Table 2-5. SUT Interface Requirements Status (continued)

| Interface | Critical | UCR Reference | Threshold CR/FR[1] | Status | Remarks[2] |
|---|---|---|---|---|---|
| **External Interfaces (continued)** | | | | | |
| E1 PRI[4] ITU-T Q.955.3 | No | 5.3.2.12.10 | 2, 3, 7, 8, 10, and 13 | Not Tested | Although this interface is offered by the SUT, it was not tested. This interface is not certified by JITC and is not required for an LSC. |
| E1 PRI[4] ITU-T Q.931 | No | 5.3.2.12.10 | 2, 3, 7, 8, 10, and 13 | Not Tested | Although this interface is offered by the SUT, it was not tested. This interface is not certified by JITC and is not required for an LSC. |
| **Network Management Interfaces** | | | | | |
| 10Base-X | No[5] | 5.3.2.4.4<br>5.3.2.7.2.8 | 16, 17, and 18[6] | Certified | Met threshold CRs/FRs. Verified via LoC. |
| 100Base-X | No[5] | 5.3.2.4.4<br>5.3.2.7.2.8 | 16, 17, and 18[6] | Certified | Met threshold CRs/FRs. Verified via LoC. |

**NOTES:**
1. The SUT high-level CR and FR ID numbers depicted in the Threshold CRs/FRs column can be cross-referenced in Table 2. These high-level CR/FR requirements refer to a detailed list of requirements provided in Enclosure 3.
2. Detailed information pertaining to open TDRs and associated operational impacts is in Enclosure 2, paragraph 11.
3. This interface is required only for a SMEO.
4. This interface is required for only for Europe deployment.
5. The SUT must provide a minimum of one of the following NM interfaces: 10Base-X or 100Base-X.
6. These NM CRs and FRs are required only for SMEO.

**LEGEND:**

| | |
|---|---|
| 10Base-X | 10 Mbps Ethernet |
| 100Base-X | 100 Mbps Ethernet |
| 1000Base-X | 1000 Mbps Ethernet |
| 802.3i | 10 Mbps twisted pair media for 10Base-X networks |
| 802.3j | 10 Mbps fiber media for 10Base-X networks |
| 802.3u | 100BASE-TX, 100BASE-T4, 100BASE-FX Fast Ethernet at 100 Mbps with auto negotiation |
| ANSI | American National Standards Institute |
| AS-SIP | Assured Services Session Initiation Protocol |
| BRI | Basic Rate Interface |
| CAS | Channel Associated Signaling |
| CCS7 | Common Channel Signaling 7 |
| CR | Capability Requirement |
| DSN | Defense Switched Network |
| E1 | European Basic Multiplex Rate (2.048 Mbps) |
| FR | Functional Requirement |
| IAD | Integrated Access Device |
| ID | Identification |
| IEEE | Institute of Electrical and Electronics Engineers |
| ISDN | Integrated Services Digital Network |
| ITU-T | International Telecommunication Union – Telecommunication Standardization Sector |
| JITC | Joint Interoperability Test Command |
| LoC | Letter of Compliance |
| LSC | Local Session Controller |
| Mbps | Megabits per second |
| MLPP | Multi-Level Precedence and Preemption |
| NI-2 | National ISDN Standard 2 |
| NM | Network Management |
| PEI | Proprietary End Instrument |
| PRI | Primary Rate Interface |
| PSTN | Public Switched Telephone Network |
| Q.931 | Signaling Standard for ISDN |
| Q.955.3 | ISDN Signaling Standard for E1 MLPP |
| SMEO | Small End Office |
| SS7 | Signaling System 7 |
| SUT | System Under Test |
| T1 | Digital Transmission Link Level 1 (1.544 Mbps) |
| T1.619a | SS7 and ISDN MLPP Signaling Standard for T1 |
| TDRs | Test Discrepancy Reports |
| UCR | Unified Capabilities Requirements |

**11.2 CR and FR.** The SUT CR and FR status is depicted in Table 2-6. Detailed CR/FR requirements are provided in Enclosure 3, Table 3-1. A summary of the SUT's ability to meet UCR requirements are provided in the sub-paragraphs below. All requirements and associated references were derived from UCR 2008, Change 1. Discrepancies discussed below were adjudicated to be minor based on vendor submission and compliance to a Plan of Actions and Milestones.

**Table 2-6. SUT CR and FR Status**

| CR/FR ID | Capability/Function | Applicability[1] | UCR Reference | Status | Remarks |
|---|---|---|---|---|---|
| 1 | **Assured Services Product Features and Capabilities** | | | | |
| | DSCP Packet Marking | Required | 5.3.2.2.1.4 | Met | |
| | Voice Features and Capabilities | Required | 5.3.2.2.2.1 | Met | |
| | Public Safety Features | Required | 5.3.2.2.2.2 | Met | |
| | ASAC – Open Loop | Required | 5.3.2.2.2.3 | Met | |
| | Signaling Protocols | Required | 5.3.2.2.2.3 | Met | |
| | Signaling Performance | Required | 5.3.2.2.2.4 | Met | |
| 2 | **Registration, Authentication, and Failover** | | | | |
| | Registration | Required | 5.3.2.3.1 | Met | |
| | Failover | Required | 5.3.2.3.2 | Met | |
| 3 | **Product Physical, Quality, and Environmental Factors** | | | | |
| | Availability | Required | 5.3.2.5.2.1 | Met | |
| | Maximum Downtimes | Required | 5.3.2.5.2.2 | Met | |
| | Loss of Packets | Required | 5.3.2.5.4 | Met | |
| 4 | **Voice End Instruments** | | | | |
| | Tones and Announcements | Required | 5.3.2.6.1.1 | Met | |
| | Audio Codecs | Conditional[2] | 5.3.2.6.1.2 | Partially Met[2] | |
| | VoIP PEI or AEI Audio Performance Requirements | Required | 5.3.2.6.1.3 | Met[3] | |
| | VoIP Sampling Standard | Required | 5.3.2.6.1.4 | Met | |
| | Authentication to LSC | Required | 5.3.2.6.1.5 | Met | |
| | Analog Telephone Support | Required | 5.3.2.6.1.6 | Met | |
| | Softphones | Conditional | 5.3.2.6.1.7 | Met | |
| | ISDN BRI | Conditional | 5.3.2.6.1.8 | Met | |
| 5 | **Video End Instruments** | | | | |
| | Video End Instrument | Required | 5.3.2.6.2 | Not Tested[4] | |
| | Display Messages, Tones, and Announcements | Required | 5.3.2.6.2.1 | Not Tested[4] | |
| | Video Codecs (Including Associated Audio Codecs) | Required | 5.3.2.6.2.2 | Not Tested[4] | |
| 6 | **LSC Requirements** | | | | |
| | PBAS/ASAC Requirements | Required | 5.3.2.7.2.1 | Met | |
| | Calling Number Delivery Requirements | Required | 5.3.2.7.2.2 | Met | |
| | LSC Signaling Requirements | Required | 5.3.2.7.2.3 | Met | |

## Table 2-6. SUT CR and FR Status (continued)

| CR/FR ID | Capability/ Function | Applicability[1] | UCR Reference | Status | Remarks |
|---|---|---|---|---|---|
| 6 | **LSC Requirements** | | | | |
| | Service Requirements under Total Loss of WAN Transport | Required | 5.3.2.7.2.4 | Met | |
| | Local Location Server and Directory | Required | 5.3.2.7.2.5 | Met | |
| | LSC Transport Interface Functions | Required | 5.3.2.7.2.7 | Met | |
| | LSC to PEI, AEI, and Operator Console Status Verification | Required | 5.3.2.7.2.10 | Partially Met[5] | |
| | Line-Side Custom Features Interference | Conditional | 5.3.2.7.2.11 | Met | |
| | Loop Avoidance | Required | 5.3.2.7.3 | Met | |
| 7 | **Call Connection Agent Requirements** | | | | |
| | CCA IWF Component | Required | 5.3.2.9.2.1 | Met | |
| | CCA MGC Component | Required | 5.3.2.9.2.2 | Met | |
| | SG Component | Conditional | 5.3.2.9.2.3 | Not Tested[6] | |
| | CCA-IWF Support for AS-SIP | Required | 5.3.2.9.5.1 | Met | |
| | CCA-IWF Support for SS7 | Conditional | 5.3.2.9.5.2 | Not Tested[6] | |
| | CCA-IWF Support for PRI via MG | Required | 5.3.2.9.5.3 | Met | |
| | CCA-IWF Support for CAS Trunks via MG | Conditional | 5.3.2.9.5.4 | Partially Met[7] | |
| | CCA-IWF Support for PEI and AEI Signaling Protocols | Required | 5.3.2.9.5.5 | Met[3] | |
| | CCA-IWF Support for VoIP and TDM Protocol Interworking | Required | 5.3.2.9.5.6 | Met | |
| | CCA Preservation of Call Ringing State during Failure Conditions | Required | 5.3.2.9.6 | Met | |
| | CCA Interactions with Transport Interface Functions | Required | 5.3.2.10.3 | Met | |
| | CCA Interactions with the EBC | Required | 5.3.2.10.4 | Met | |
| | CCA Support for Admission Control | Required | 5.3.2.10.5 | Met | |
| | CCA Support for UFS | Required | 5.3.2.10.6 | Met | |
| | CCA Support for IA | Required | 5.3.2.10.7 | Met | IA is covered under separate report. |
| | CCA Interaction with EIs | Required | 5.3.2.10.10 | Partially Met[3] | |
| | CCA Support for AS Voice and Video | Required | 5.3.2.10.11 | Partially Met[4] | |
| | CCA Interactions with Service Control Functions | Required | 5.3.2.10.12 | Met | |
| | CCA Interworking between AS-SIP and SS7 | Conditional | 5.3.2.11 | Not Tested[6] | |
| 8 | **MG Requirements** | | | | |
| | Role of MG In LSC | Required | 5.3.2.12.3.1 | Met | |
| | MG Support for ASAC | Required | 5.3.2.12.4.1 | Met | |
| | MG and IA Functions | Required | 5.3.2.12.4.2 | Met | IA is covered under separate report. |
| | MG Interaction with Service Control Function | Required | 5.3.2.12.4.3 | Met | |
| | MG Interactions with IP Transport Interface Functions | Required | 5.3.2.12.4.4 | Met | |

## Table 2-6. SUT CR and FR Status (continued)

| CR/FR ID | Capability/ Function | Applicability[1] | UCR Reference | Status | Remarks |
|---|---|---|---|---|---|
| 8 | **MG Requirements (continued)** | | | | |
| | MG-EBC interactions | Required | 5.3.2.12.4.5 | Met | |
| | MG IP-Based PSTN Interface Requirements | Conditional | 5.3.2.12.4.7 | Not Tested[6] | |
| | MG Interaction with EIs | Required | 5.3.2.12.4.8 | Met | |
| | MG support for User Features and Services | Required | 5.3.2.12.4.9 | Met | |
| | MG Interface to TDM | Required | 5.3.2.12.5 | Met | |
| | MG Interface to TDM Allied and Coalition | Conditional | 5.3.2.12.6 | Not Tested[6] | |
| | MG Interface to TDM PSTN in U.S. | Required | 5.3.2.12.7 | Met | |
| | MG Interfaces to TDM PSTN OCONUS | Required | 5.3.2.12.8 | Not Met[8] | |
| | MG Support for CCS7 | Conditional | 5.3.2.12.9 | Not Tested[6] | |
| | MG Support for ISDN PRI Trunks | Required | 5.3.2.12.10 | Met | |
| | MG Support for CAS Trunks | Required | 5.3.2.12.11 | Partially Met[7] | |
| | MG requirements for VoIP Internal Interfaces | Required | 5.3.2.12.12 | Met | |
| | MG Echo Cancellation | Required | 5.3.2.12.13 | Met | |
| | MG Clock Timing | Required | 5.3.2.12.14 | Met | |
| | MGC-MG CCA Functions | Required | 5.3.2.12.15 | Met | |
| | MG ITU-T V.150.1 | Required | 5.3.2.12.16 | Not Met[9] | |
| | MG Preservation of Call Ringing during Failure | Required | 5.3.2.12.17 | Met | |
| 9 | **SG Requirements** | | | | |
| | SG and CCS7 Network Interactions | Conditional | 5.3.2.13.5.1 | Not Tested[7] | |
| | SG Interactions with CCA | Conditional | 5.3.2.13.5.2 | Not Tested[7] | |
| | SG Interworking Functions | Conditional | 5.3.2.13.5.3 | Not Tested[7] | |
| 10 | **WWNDP Requirements** | | | | |
| | WWNDP | Required | 5.3.2.16 | Met | |
| | DSN WWNDP | Required | 5.3.2.16.1 | Met | |
| 11 | **Commercial Cost Avoidance** | | | | |
| | Commercial Cost Avoidance | Required | 5.3.2.23 | Not Met[10] | |
| 12 | **AS-SIP Based for External Devices (Voicemail, Unified Messaging, and Automated Receiving Devices)** | | | | |
| | AS-SIP Requirements for External Interfaces | Conditional | 5.3.2.24 | Met[11] | |
| 13 | **Precedence Call Diversion** | | | | |
| | Precedence call Diversion | Required | 5.3.2.25 | Met | |
| 14 | **Attendant Station Features** | | | | |
| | Precedence and Preemption | Required | 5.3.2.26.1 | Met | |
| | Call Display | Required | 5.3.2.26.2 | Met | |
| | Class of Service Override | Required | 5.3.2.26.3 | Met | |
| | Busy Override and Busy Verification | Required | 5.3.2.26.4 | Met | |
| | Night service | Required | 5.3.2.26.5 | Met | |
| | Automatic Recall of Attendant | Required | 5.3.2.26.6 | Met | |
| | Calls in Queue to the Attendant | Required | 5.3.2.26.7 | Met | |

## Table 2-6. SUT CR and FR Status (continued)

| CR/FR ID | Capability/ Function | Applicability[1] | UCR Reference | Status | Remarks |
|---|---|---|---|---|---|
| 15 | **AS-SIP Requirements** | | | | |
| | SIP Requirements for AS-SIP Signaling Appliances and AS-SIP Eis | Required | 5.3.4.7 | Met | |
| | SIP Session Keep-Alive Timer | Required | 5.3.4.8 | Met | |
| | Session Description Protocol | Required | 5.3.4.9 | Met | |
| | Precedence and Preemption | Required | 5.3.4.10 | Met | |
| | Video Telephony – General Rules | Required | 5.3.4.12 | Not Met[4] | |
| | Calling Services | Required | 5.3.4.13 | Partially Met[12] | |
| | SIP Translation Requirements for Inter-working AS-SIP Signaling Appliances | Required | 5.3.4.14 | Met | |
| | Relevant Timers for the Terminating Gateway and the Originating Gateway | Required | 5.3.4.15 | Met | |
| | SIP Requirements for Interworking AS-SIP Signaling Appliances | Required | 5.3.4.16 | Met | |
| | Keep-Alive Timer Requirements for Interworking AS-SIP Signaling Appliances | Required | 5.3.4.17 | Met | |
| | Precedence and Preemption Extensions for Interworking AS-SIP Signaling Appliances | Required | 5.3.4.18 | Met | |
| | Supplementary Services | Required | 5.3.4.19 | Partially Met[12] | |
| 16 | **IPv6 Requirements** | | | | |
| | Product Requirements | Required | 5.3.5.4 | Met | G450 supports IPv4/v6 dual stack. G650 supports IPv4 only. |
| 17 | **NM Requirements (LSC)** | | | | |
| | LSC Management Function | Required | 5.3.2.7.2.6 | Met | |
| | VVoIP NMS Interface Requirements | Required | 5.3.2.4.4 | Met | |
| | General Management requirements | Required | 5.3.2.17.2 | Met | |
| | Requirement for FCAPS Management | Required | 5.3.2.17.3 | Partially Met[13] | |
| | NM requirements of Appliance Functions | Required | 5.3.2.18 | Met | |
| | Accounting Management | Required | 5.3.2.19 | Partially Met[14] | |
| 18 | **NM Requirements (SMEO)** | | | | |
| | Physical Interface to ADIMSS | Required | 5.2.8.1 | Met | SUT requirement was met with an IEEE 8.02.3u Ethernet Interface. |
| | Measurements and Data Generation | Required | 5.2.8.2 | Met | |
| | Fault Management | Required | 5.2.8.3 | Met | |
| | Configuration Management | Required | 5.2.8.4 | Met | |
| | Automated Message Accounting | Required | 5.2.8.5 | Met | |
| | Performance Management | Required | 5.2.8.6 | Met | |

## Table 2-6. SUT CR and FR Status (continued)

**NOTES:**

1. The annotation of 'required' refers to a high-level requirement category. The applicability of each sub-requirement is provided in Enclosure 3.
2. The SUT Media Gateway and CCA do not support the ITU-T G.723.1 codec. This was adjudicated by DISA as having a minor operational impact. Additionally this requirement was changed in UCR 2008 change 2 from required to conditional with an immediate applicability.
3. The SUT met the requirement for ITU-T H.323 PEIs, but did not meet requirements for an AEI, therefore none were provided. The SUT was tested to UCR 2008 change 1 requirements and since the AEI requirements are new, vendor has 18 months to comply (July 2011).
4. The SUT supports Legacy H.320 video with ISDN PRI and BRI interfaces, however it does not support IP video PEI or AEI EIs. This was adjudicated by DISA to have a minor operational impact because of the limited deployment of IP video.
5. The SUT LSC to PEI, AEI and Operator Console Status Verification do not support a default set of 5 minutes. The SUT default is 20 every 20 seconds but is configurable up to 2 hours. This was adjudicated by DISA as having a minor operational impact with the recommendation to change this requirement to remove the default value as long as it is configurable.
6. The SUT met the IWF requirements with the T1 PRI interfaces and T1/E1 CAS. The SUT does not support and SS7 or IP based PSTN interfaces which are not required for an LSC.
7. The SUT met all critical T1 CAS interface requirements with the following exceptions adjudicated by DISA as having a minor operational impact with no POA&M to fix it:
   a. The SUT acknowledges a wink start signal greater than 350 ms. The SUT recognizes wink start signals up to 395 ms.
   b. The SUT preempt signal is out of tolerance. The SUT generates a preempt signal from 336 to 339 ms. The requirement is 340 to 350 ms. Since all switches acknowledge the preempt signal from 328 to 363 ms there is no impact.
8. The SUT offers an E1 ETSI ISDN PRI interface however it was not tested and is not covered under this certification. The E1 ETSI ISDN PRI interface is required only for deployment in Europe. The SUT does support the conditional E1 CAS interface for Europe, and therefore the SUT is not certified for deployment in Europe.
9. The vendor submitted a LoC stating that the SUT do not support ITU-T V.150.1 Vendor submitted a POA&M and plans to support this feature in the next major release of CM for July 2012. ITU-T V.150.1 is a new UCR 2008 change 1 requirement and the vendor has 18 months (July 2011) to comply.
10. The SUT does not support Commercial Cost Avoidance with the DISN RTS Routing Database or LDAP Version 3 messages for a Database Query. This is a new UCR 2008 change 1 requirement and the vendor has 18 months (July 2011) to comply. Vendor submitted a POA&M stating plans to support this feature in the next major CM release.
11. The SUT met this requirement with the CM Messaging Voice Mail System which is listed separately on the UC APL.
12. The SUT met the UCR Supplementary Services and Calling Services Requirements with the following exceptions adjudicated by DISA as having a minor operational impact with a Vendor POA&M to fix in next major CM release for July 2012:
    - Call Forwarded calls above ROUTINE ring the destination at ROUTINE cadence although the precedence level is maintained.
    - Unattended Call Transfers to the Avaya AS5300 @ precedence above ROUTINE are class marked at ROUTINE.
    - Instruments assigned the Hotline Feature cannot restrict other features (i.e. Hold, Transfer, Add hock Conferencing, etc.)
    - SUT plays Precedence Notification Tone (PNT) to an active user for only 3 seconds. The requirement is indefinite or until user hangs up.
13. The SUT met the NM requirements in accordance with UCR 2008 Change 1 Section 5.3.2.17.3 with the following exception: The SUT does not have the ability to limit calls to a destination based on percentage of calls based on vendors LoC. This discrepancy was adjudicated by DISA as having a minor operational impact with a vendor POA&M to fix in May 2012.
14. The SUT met the NM requirements in accordance with UCR 2008 Change 1 Section 5.3.2.19 with the following exceptions stipulated in the vendor's LoC which were adjudicated by DISA as having a minor operational impact with a vendor POA&M to fix in May 2012.
    - Does Not Comply with E-Model MOS in the Call Detail Record (CDR) Requirements
    - Does Not Support the Equipment Impairment Factor (Ie) and the TCLw.
    - Does Not Generate Alarms to the VVoIP EMS when E-Model R-factor record in CDR is not met.
    - Does not provide a CDR with the R-Factor and associated raw statistics

## Table 2-6. SUT CR and FR Status (continued)

**LEGEND:**

| | |
|---|---|
| AEI | AS-SIP End Instrument |
| AS | Assured Services |
| ASAC | Assured Services Admission Control |
| AS-SIP | Assured Services Session Initiation Protocol |
| BRI | Basic Rate Interface |
| CAS | Channel Associated Signaling |
| CCA | Call Connection Agent |
| CDR | Call Detail Record |
| CM | Communication Manager |
| CR | Capability Requirement |
| CCS7 | Common Channel Signaling |
| DISA | Defense Information Systems Agency |
| DSCP | Differentiated Services Code Point |
| DSN | Defense Switched Network |
| EBC | Edge Boundary Controller |
| EI | End Instrument |
| FCAPS | Fault, Configuration, Accounting, Performance and Security |
| FR | Functional Requirement |
| G.711 | PCM of voice frequencies |
| IA | Information Assurance |
| IP | Internet Protocol |
| ID | Identification |
| ISDN | Integrated Services Digital Network |
| IP | Internet Protocol |
| IPv4 | Internet Protocol version 4 |
| IPv6 | Internet Protocol version 6 |
| ITU-T | International Telecommunication Union - Telecommunication Standardization Sector |
| IWF | Interworking Function |
| kbps | kilobits per second |
| LoC | Letter of Compliance |
| LSC | Local Session Controller |
| Mbps | Megabits per second |
| MG | Media Gateway |
| MGC | Media Gateway Controller |
| NM | Network Management |
| NMS | Network Management System |
| OCONUS | Outside the Continental United States |
| PBAS | Precedence Based Assured Services |
| PCM | Pulse Code Modulation |
| PEI | Proprietary End Instrument |
| PNT | Precedence Notification Tone |
| POA&M | Plan of Action and Milestones |
| PRI | Primary Rate Interface |
| PSTN | Public Switched Telephone Network |
| SG | Signaling Gateway |
| SIP | Session Initiation Protocol |
| SNMPv3 | Simple Network Management Protocol version 3 |
| SS7 | Signaling System 7 |
| SUT | System Under Test |
| T1 | Digital Transmission Link Level 1 (1.544 Mbps) |
| TDM | Time Division Multiplexing |
| UCR | Unified Capabilities Requirements |
| UFS | User Features and Services |
| U.S. | United States |
| V.150 | Modem over Internet Protocol Networks |
| VoIP | Voice over Internet Protocol |
| VVoIP | Voice and Video over Internet Protocol |
| WAN | Wide Area Network |
| WWNDP | Worldwide Numbering and Dialing Plan |

### a. Assured Services Product Features and Capabilities.

(1) Differentiated Services Code Point (DSCP) Packet Marking. As part of the session setup process, the LSC controls what DSCP to use in the subsequent session media stream packets. The exact DSCP method used shall comply with Section 5.3.3.3.2. The SUT met all DSCP Packet Marking requirements for IPv4 and IPv6.

(2) Voice Features and Capabilities. The LSC must provide all of the features listed in Table 5.3.2.2-1 of the UCR. The SUT met the Voice Features and Capabilities Requirements with the following exceptions adjudicated by DISA as having a minor operational impact with a Vendor Plan of Action and Milestones (POA&M) to fix in next major CM release for July 2012:

- Call Forwarded calls above ROUTINE ring the destination at ROUTINE cadence although the precedence level is maintained.

- Unattended Call Transfers to the Avaya AS5300 @ precedence above

ROUTINE are class marked at ROUTINE.

- Instruments assigned the Hotline Feature cannot restrict other features (i.e. Hold, Transfer, Add hock Conferencing, etc.)

- SUT plays Precedence Notification Tone (PNT) to an active user for only 3 seconds. The requirement is indefinite or until user hangs up.

(3) Public Safety Features. The LSC must provide basic emergency service (911), tracing of terminating calls, outgoing call tracing, and tracing of a call in progress. The SUT met all Public Safety Features requirements.

(4) Assured Service Admission Control (ASAC) – Open Loop. The LSC must meet the ASAC requirements for the LSC and the Multifunction Softswitch (MFSS). In the execution of ASAC, certain procedures need to be followed, such as (a) actions to be taken if a precedence session request cannot be completed because existing sessions are at equal or higher precedence, or (b) tones to be generated when a session is preempted. The SUT met all ASAC requirements.

(5) Signaling Protocols. The LSC must use appropriate signaling for specific trunk types. The control/management protocol between the SUT PEI and its CCA is a proprietary ITU-T H.323. The SUT does not support AEIs. AEIs are new requirements in UCR change 1 and the vendor has 18 months (July 2011) to comply. The signaling protocol used by the SUT on UC IP trunks is AS-SIP as specified in Section 5.3.4, AS-SIP Requirements. The SUT MG supports the following TDM interfaces: ANSI T1.619a PRI, ANSI T1.607 PRI (NI2), T1 CAS, and E1 CAS. The SUT met all Signaling Protocol requirements for PEIs but does not support AEIs.

(6) Signaling Performance. The LSC has conditional requirements for call setup and tear-down times. SUT met all signaling performance requirements

**b. Registration, Authentication, and Failover.**

(1) Registration. Registration and authentication between the LSC and EIs shall follow the requirements set forth in UCR 2008, Section 5.4, IA Requirements. IA requirements are tested separately; see paragraph 11.3.

(2) Failover. The LSCs shall be registered to a primary and backup MFSS. In case of failure of the primary MFSS, the LSC will default to the backup MFSS. This functionality is accomplished and met by the Edge Boundary Controller within the UC network.

**c. Product Physical, Quality, and Environmental Factors.**

(1) Availability. The Assured Services subsystem shall have a

hardware/software availability of 0.99999 (non-availability of no more than 5 minutes per year). This requirement was met via vendor LoC. The SUT met all component failover requirements.

(2) Maximum Downtimes. The performance parameters associated with the Assured Services Local Area Network (ASLAN), MFSS, and LSC, when combined, shall meet the following maximum downtime requirements:

- IP (10/100 Ethernet) network links – 35 minutes/year
- IP subscriber – 12 minutes/year

This requirement was met via vendor LoC.

(3) Loss of Packets. For Voice over Internet Protocol (VoIP) devices, the voice quality shall have a MOS of 4.0 (R-Factor equals 80) or better, as measured in accordance with the E-Model. Additionally, these devices shall not lose two or more consecutive packets in a minute and shall not lose more than seven voice packets (excluding signaling packets) in a five-minute period. The SUT met all Packet Loss requirements for PEIs.

**d. Voice End Instrument.** The SUT met PEI requirements.

(1) Tones and announcements. Tones and announcements, as required in UCR 2008, Sections 5.2.4.5.2, DSN Information Signals, and Section 5.2.2.1.3, Announcements, shall be supported, except for the loss of Command and Control announcement. The SUT met all requirements for tones and announcements.

(2) Audio codecs. In accordance with UCR 2008 Change 1, the LSC shall support the origination and termination of a voice session using the following codecs: G.711 (a-law and µ-law), G.722.1, and G.729 or G.729A, and G723.1. The SUT met these requirements except for the G.723.1 codec on PEIs. However, in accordance with UCR 2008 Change 2 the G.723.1 codec was changed from required to conditional which has an immediate applicability.

(3) VoIP PEI or AEI Audio Performance Requirements. Voice over IP PEIs or AEIs (i.e., handset, headset, and hands-free types) shall comply with TIA-810-B, November 3, 2006. The SUT met all audio performance requirements for PEIs with testing and vendor's LoC.

(4) VoIP Sampling Standard. For Fixed-to-Fixed calls, the product shall use 20 ms as the default voice sample length, and as the basis for the voice payload packet size. The SUT met the VoIP sampling standard requirements for PEIs.

(5) Authentication to LSC. The PEI and AEI shall be capable of authenticating itself to its associated LSC and vice versa. The SUT met all PEI to LSC authentication requirements for PEIs but AEIs are not supported by the SUT. AEIs are

new requirements in UCR change 1 and the vendor has 18 months (July 2011) to comply.

(6) Analog Telephone Support. Analog instruments, including secure analog End Instruments (EI), analog facsimile EIs, and analog modem EIs, shall be supported by the LSC either by a Terminal Adapter or an Integrated Access Device (IAD) connected to an Ethernet port. The SUT met all analog telephone support requirements via an IAD integrated within their G450 and G650 Gateways.

(7) Softphones. The softphone shall be conceptually identical to a traditional IP "hard" telephone and is required to provide voice features and functionality provided by a traditional IP hard telephone. The SUT met all softphone requirements for an LSC with a PEI softphone.

(8) ISDN Basic Rate Increase (BRI). The ISDN BRI EIs, including secure ISDN BRI EIs, may be supported by the LSC. The SUT met all ISDN BRI requirements for an LSC with both U and S/T interfaces. This interface is required for a SMEO.

(9) Digital Proprietary EIs. The SUT met all the Capability and Feature Requirements with their Digital Proprietary EIs.

**e. Video End Instruments.** The SUT must support both voice and video. PEIs and AEIs can support voice-only, video-only or both voice and video. The SUT's PEI support voice-only and did not support video. The SUT does not support AEI voice or Video EIs. This was adjudicated by DISA to have minor operational impact because of the limited deployment of PEIs with video.

(1) Video EI. Video EIs are considered associated with the LSC and must have been designed in conjunction with the LSC design. An IP video instrument shall be designed in accordance with the acquiring activity requirements. This was not tested as the SUT did not provide any Video EIs.

(2) Display Messages, Tones, and Announcements. Tones and announcements, as appropriate for voice and video over IP, and as required, in UCR 2008, Sections 5.2.4.5.2, DSN Information Signals, 5.2.2.1.3, Announcements, shall be supported by the PEI and AEI. This was not tested as the SUT did not provide any Video EIs.

(3) Video Codecs (Including Associated Audio Codecs). The product shall support the origination, maintenance, and termination of a video session using the following codecs: one G.xxx and one H.xxx must be used to create and sustain a video session. This was not tested as the SUT did not provide any video EIs.

**f. LSC Requirements.**

(1) Precedence Base Assured Service/Assured Services Admission Control (PBAS/ASAC) Requirements. The LSC shall meet all the requirements for

PBAS/ASAC, as appropriate for VoIP only as specified in UCR 2008, Section 5.2.2, Multilevel Precedence and Preemption. The SUT met all PBAS/ASAC requirements.

(2) Calling Number Delivery Requirements. The calling number provided to the called party shall be determined by the dial plan serving the calling instrument in accordance with Telcordia Technologies GR-31-CORE *"CLASS$^{SM}$ Feature: Calling Number Delivery,"* Issue 1, June 2000. The SUT met all calling number delivery requirements.

(3) LSC Signaling Requirements. The LSC must provide signaling on the line side for local intra-enclave subscriber-to-subscriber calls, and trunk-side signaling for calls between an external enclave and a local subscriber. The SUT met all LSC Signaling Requirements.

(4) Service Requirements under Total Loss of Wide Area Network (WAN) Transport. In the event that a total loss of connectivity to the DISN WAN occurs, the LSC shall provide the following functions:

- Completion of local (intra-enclave) calls
- Routing of calls to the PSTN using a local MG (PRI or CAS as required by the local interface)
- User look-up of local directory information

The SUT met all Service Requirements under Total Loss of WAN Transport. This was verified with testing and vendor's LoC.

(5) Local Location Server (LLS) and Directory. The purpose of the LLS is to provide information on call routing and called address translation (where a called address is contained within the called SIP Uniform Resource Identifier (URI) in the form of the called number). The SUT met all LLS and directory requirements.

(6) LSC Transport Interface Functions. The LSC Transport Interface functions provide interface and connectivity functions with the ASLAN and its IP packet transport network. The SUT met all transport interface function requirements.

(7) LSC to PEI, AEI and Operator Console Status Verification. Periodically, the LSC shall verify the status of its registered and authenticated IP EIs. The SUT met all status verification requirements for PEIs. The SUT does not support AEIs or Video EIs. The SUT met the Operator Console requirement with their 302C Attendant Console.

(8) Line-Side Custom Features Interference. Vendors may implement unique custom features applicable to the line side of the LSC. Line-side custom features must not interfere with the Assured Services requirements. The SUT offers line-side custom features. JITC did not test any of those features; therefore, they are not certified for use.

(9) Loop Avoidance. During the call establishment process, the product shall be capable of preventing or detecting and stopping hair-pin routing loops over ANSI T1.619a and commercial PRI trunk groups (i.e., T1 PRI and E1 PRI) between a legacy switch (e.g., TDM EO) and an LSC. The SUT met all Loop Avoidance requirements for T1 PRI (ANSI T1.619a and NI-2), T1 CAS and E1 CAS.

**g. Call Connection Agent (CCA) Requirements.**

(1) CCA Interworking Function (IWF) Component. The role of the IWF within the CCA is to support all the VoIP and TDM signaling protocols that the LSC supports for EIs, Media Gateways (MG), and Edge Boundary Controllers (EBC), and to Interwork all these various signaling protocols with one another. The SUT met all CCA IWF requirements for the following interfaces: T1 PRI (ANSI T1.619a and NI-2), T1 CAS and E1 CAS.

(2) CCA Media Gateway Controller (MGC) Component. The MGC within the CCA must control all MGs within the LSC or MFSS control all trunks within each MG, control all signaling and media streams on each trunk within each MG, accept IP-encapsulated signaling streams from a Serial Gateway (SG) or MG, and to use either ITU-T recommendation H.248 or a supplier-proprietary protocol to accomplish these controls. The SUT met all CCA MGC requirements.

(3) SG Component. The role of the CCA with respect to the SG is to control all SGs within the network appliance, and to control all signaling links (DoD CCS7) within each SG. The SG is conditional for an LSC and is not offered by the SUT.

(4) CCA-IWF Support for AS-SIP. The CCA IWF shall support the AS-SIP protocol consistent with the detailed AS-SIP protocol requirements in Section 5.3.4, AS-SIP Requirements. The SUT met all CCA IWF requirements for the following interfaces: T1 PRI (ANSI T1.619a and NI-2), T1 CAS and E1 CAS.

(5) CCA-IWF Support for SS7. CCA-IWF support for SS7 is a conditional requirement for LSCs and is not supported by the SUT.

(6) CCA-IWF Support for PRI, via MG. The CCA IWF shall support the U.S./National ISDN version of the ISDN PRI protocol. The SUT met all requirements for CCA-IWF support for T1 PRI (ANSI T1.619a and NI-2).

(7) CCA-IWF Support for CAS Trunks via MG. The SUT met all the CCA IWF Support for CAS Trunks via MG requirements with following exceptions adjudicated by DISA as having a minor operational impact with no POA&M to fix them:

- The SUT acknowledges a wink start signal greater than 350 milliseconds (ms). The SUT recognizes wink start signals up to 395 ms.
- The SUT preempt signal is out of tolerance. The SUT generates a

preempt signal from 336 to 339 ms. The requirement is 340 to 350 ms. Since all switches acknowledge the preempt signal from 328 to 363 ms there is no impact.

(8) CCA-IWF Support for PEI and AEI Signaling Protocols. The CCA IWF shall support supplier-proprietary Voice and Video EIs and their associated proprietary EI signaling protocols. The SUT's PEI support voice only and did not support video. The SUT does not support AEI voice or Video EIs. This was adjudicated by DISA to have minor operational impact because of the limited deployment of PEIs with video.

(9) CCA-IWF Support for VoIP and TDM Protocol Interworking. The role of the IWF within the CCA is to support all the VoIP and TDM signaling protocols that the appliance supports for PEIs, AEIs, MGs, and EBCs, and interwork all these various signaling protocols with one another. The SUT met all requirements for CCA-IWF Support for VoIP and TDM Protocol Interworking required interfaces (T1 PRI (ANSI T1.619a and NI-2), T1 CAS and E1 CAS.

(10) CCA Preservation of Call Ringing State during Failure Conditions. The CCA in the LSC, MFSS, and WAN SS shall not allow AS-SIP sessions that have reached the ringing state to fail when an internal failure occurs within the CCA. The SUT met all requirements for Preservation of Call Ringing State during Failure Conditions.

(11) CCA Interactions with Transport Interface Functions. The CCA interacts with Transport Interface functions by using them to communicate with PEIs, AEIs, the EBC, the MGs, and the SG over the ASLAN. The SUT met all requirements for CCA interactions with Transport Interface Functions with the exception of AEIs which are not supported by the SUT.

(12) CCA Interactions with the EBC. The CCA interacts with the EBC by directing AS-SIP signaling packets to it (for signaling messages destined for an MFSS) and by accepting AS-SIP signaling packets from it (for signaling messages directed to the LSC from an MFSS). The SUT met all requirements for CCA interactions with the EBC.

(13) CCA Support for Admission Control. The CCA interacts with the ASAC component of the LSC and MFSS to perform specific functions related to ASAC, such as counting internal, outgoing, and incoming calls; managing separate call budgets for VoIP and Video over IP calls; and providing preemption. The SUT met all requirements for CCA support for Admission Control.

(14) CCA Support for UFS. The UFS Server is responsible for providing features and services to VoIP and Video PEIs/AEIs on an LSC or MFSS, where the CCA alone cannot provide the feature or service. The SUT met all requirements for CCA Support for UFS for PEIs only.

(15) CCA Support for IA. The Information Assurance function within the

appliance ensures that end users, PEIs, AEIs, MGs, SGs, and EBCs that use the appliance are all properly authenticated and authorized by the appliance. The Information Assurance function ensures that Voice and Video signaling streams that traverse the appliance and its ASLAN are encrypted properly with SIP/TLS. IA requirements are tested separately; see paragraph 11.3.

(16) CCA Interaction with EIs. The LLS provides information on called address translation in response to call routing queries from the CCA. The CCA sends call routing queries to the LLS for both outgoing calls from appliance PEIs or AEIs (i.e., LSC and MFSS) and incoming calls to appliance PEIs or AEIs (i.e., LSC and MFSS). The SUT met some requirements for CCA interaction with ITU-T H.323 PEIs only.

(17) CCA Support for AS Voice and Video. The CCA in the MFSS or LSC needs to interact with VoIP PEIs and AEIs served by that MFSS or LSC. The VoIP interface between the PEI and the MFSS or LSC is left up to the network appliance supplier. The VoIP interface between the AEI and the MFSS or LSC is AS-SIP. The SUT's PEI support voice only and did not support AEI voice or video. This was adjudicated by DISA to have minor operational impact because of the limited deployment of PEIs with video.

(18) CCA Interactions with Service Control Functions. The CCA shall support the ability to remove VoIP and Video sessions and session requests from the media server so the CCA can continue with necessary session processing once the media server has completed its functions. The SUT met all requirements for CCA Interactions with Service Control Functions for VoIP sessions only.

(19) CCA Interworking between AS-SIP and CCS7. Interworking is performed at a node with CCA (SIP/CCS7 IWF) functionality that processes/interworks incoming CCS7 messages to outgoing AS-SIP messages, and similarly, incoming AS-SIP messages to outgoing CCS7 messages. This is a conditional requirement for LSCs and is not supported by the SUT.

**h. MG Requirements.**

(1) Role of MG in LSC. The MG supports interconnection of VoIP, Fax over Internet Protocol (FoIP), and Messaging over Internet Protocol (MoIP) media streams with the LSC media server, which provides tones and announcements for LSC calls and LSC features. To support inter-enclave MoIP and FoIP, the LSC must meet ITU-T V.150.1 requirements. This requirement was not met by the SUT and is a new UCR 2008 change 1 requirement. The vendor has 18 months (July 2011) to comply. The vendor stated in their PoAM they will fix this discrepancy in their next major CM release scheduled for July 2012.

(2) MG Support for ASAC. The MG assists the CCA in performing ASAC (i.e., call preemption based on per-call precedence levels) for outgoing TDM calls at MGs and for incoming TDM calls at MGs. The SUT met all requirements for MG

Support for ASAC.

(3) MG and IA Functions. The IA function within the appliance ensures that end users, PEIs, AEIs, MGs, SGs, and EBCs that use the appliance are all properly authenticated by the appliance. The IA function also ensures that VoIP signaling streams and media streams that traverse the appliance and its ASLAN are properly encrypted, using SIP/TLS and SRTP, respectively. IA requirements are tested separately; see paragraph 11.3.

(4) MG Interaction with Service Control Function. The MG is responsible for routing individual VoIP, FoIP, and MoIP media streams to the media server when instructed to do so by the CCA/MGC. When instructed to do so by the CCA/MGC, the MG is responsible for removing individual VoIP, FoIP, and MoIP media streams from the media server, and for either disconnecting them entirely, or routing them on to other LSC end users (e.g., VoIP or video EIs). The SUT met all requirements for MG Interaction with Service Control Function except for V.150.1. This is a new UCR 2008 change 1 requirement. The vendor has 18 months (July 2011) to comply. The vendor stated in their PoAM they will fix this discrepancy in their next major CM release scheduled for July 2012.

(5) MG Interactions with IP Transport Interface Functions. The Transport Interface functions in the LSC provide interface and connectivity functions with the ASLAN and its IP packet transport network. The SUT met all requirements for MG Interactions with IP Transport Interface Functions.

(6) MG-EBC interactions. The MG interacts with the EBC by sending SRTP media streams to it (for call media destined for a PEI, AEI, or MG that is served by another appliance outside the LSC), or by accepting SRTP media streams from it (for call media arriving from a PEI, AEI, or MG that is served by another appliance outside the LSC). The SUT met all requirements for MG-EBC interactions for PEI interactions only.

(7) MG IP-Based PSTN Interface Requirements. Voice and Video over IP interfaces from the UC network to the PSTN have not been defined. Interfaces from an LSC or MFSS to the PSTN will be via an MG with TDM interfaces as specified in UCR 2008, Section 5.2, Circuit-Switched Capabilities and Features. The SUT does not support this requirement which is conditional for an LSC.

(8) MG Interaction with EIs. The MG in the MFSS or LSC needs to interact with VoIP EIs served by that MFSS or LSC, and with VoIP EIs served by other MFSSs or LSCs. The VoIP signaling interface between the PEI and the MFSS or LSC is left up to the network appliance supplier. The VoIP signaling interface between the AEI and the MFSS or LSC is AS-SIP. The SUT met all MG Interaction with VoIP EIs requirements.

(9) MG Support for User Features and Services. The MG shall support the

operation of features for VoIP and Video end users, consistent with the operation of this feature on analog and ISDN lines in DoD TDM switches today. The SUT met all requirements for MG Support for User Features and Services with the exception of video which is not supported by the SUT. This was adjudicated by DISA to have a minor operational impact because of the limited deployment of PEIs with video.

(10) MG Interface to TDM network elements in DoD Networks. Each appliance MG shall support TDM trunk groups that can interconnect with the following devices in DoD networks, in the United States and worldwide: PBXs, SMEOs, EOs, and MFSs. The SUT met all requirements for MG Interface to TDM devices in DoD Networks.

(11) MG Interface to TDM Allied and Coalition. The appliance suppliers should support TDM trunk groups on their MG product that can interconnect with devices in U.S. allied and coalition partner networks worldwide. This requirement is conditional in an LSC and not offered by SUT.

(12) MG Interface to TDM PSTN in US. Each appliance MG shall support TDM trunk groups that can interconnect with NEs in the PSTN in the United States. The SUT met all requirements for MG Interface to TDM PSTN in the US using T1 ISDN PRI and T1 CAS.

(13) MG Interfaces to TDM PSTN OCONUS. The appliance supplier (i.e., LSC or MFSS supplier) should support TDM trunk groups on its MG product that can interconnect with devices in foreign country PTT networks (OCONUS) worldwide. The SUT met this requirement with E1 CAS only.

(14) MG Support for CCS7. The MG shall support TDM trunk groups that are controlled by a separate CCA-to-SG signaling link that carries DoD CCS7 protocol. The MG shall support these TDM trunk groups, and the SG shall support DoD CCS7 signaling. This is a conditional requirement for an LSC and is not supported by the SUT.

(15) MG Support for ISDN PRI Trunks. The MG shall support ISDN PRI trunk groups that carry the U.S./National ISDN version of the ISDN PRI protocol. The SUT met all requirements for MG Support for ISDN T1 PRI Trunks.

(16) MG Support for CAS Trunks. The MG shall support CAS trunk groups that carry the U.S. version of the CAS protocol. CAS is a conditional requirement for LSCs but was tested on the SUT. The SUT met all requirements for T1 CAS and E1 CAS trunk groups.

(17) MG requirements for VoIP Internal Interfaces. The MG shall connect to the ASLAN of the appliance using the physical layer and data link layer protocols of the ASLAN. In this case, the MG shall appear to the MGC, EBC, and appliance PEIs/AEIs as a physical layer and data link layer endpoint on a LAN switch in the ASLAN. The

SUT partially met requirements for VoIP Internal Interfaces. The SUT does not support Clear mode 64 Kbps in accordance with RFC 4040. This discrepancy was adjudicated by DISA as having a minor operational impact with the vendor PoAM to fix this discrepancy in their next major CM release scheduled for July 2012.

(18) MG Echo Cancellation. The MG shall provide an EC capability with an echo path capacity (echo tail length) of at least 64 ms. The MG shall provide echo cancellation for voice, G3 Fax, and VBD modem fax calls. Each MG EC shall be equipped with an "echo canceller disabling signal" tone detector. The SUT met all requirements for MG Echo Cancellation.

(19) MG Clock Timing. The MG shall derive its clock timing from a designated T1 or E1 interface. The SUT met all MG Clock Timing requirements derived from their T1 or E1 interfaces.

(20) MG V.150.1. When the MG uses V.150.1 inband signaling to transition between audio, FoIP, modem relay, or VBD states or modes, the MG shall continue to use the established session's protocol (e.g., decimal 17 for UDP) and port numbers so that the transition is transparent to the EBC. The V.150.1 is not supported by the SUT; this is a new UCR 2008 change 1 requirement. The vendor has 18 months (July 2011) to comply. The vendor stated in their PoAM they will fix this discrepancy in their next major CM release scheduled for July 2012.

(21) MG Preservation of Call Ringing during Failure. The LSC MG, MFSS MG, and WAN SS MG shall not allow AS-SIP sessions that have reached the ringing state to fail when an internal failure occurs within that MG. The SUT met all requirements for Preservation of Call Ringing during Failure.

**i. SG Requirements.**

(1) SG and CCS7 network Interactions. The SG shall support signaling connectivity to the DoD CCS7 network based on UCR 2008, Section 5.2, Circuit-Switched Capabilities and Features, specifications for CCS7. This is a conditional requirement for LSCs and is not supported by the SUT.

(2) SG Interactions with CCA. The SG shall support a supplier-specific interface to the CCA for interactions between the SG and CCA. This is a conditional requirement for LSCs and was not tested on the SUT.

(3) SG Interworking Functions. The SG will terminate CCS7 links on its CCS7 side and transport the CCS7 call control and service control protocols (i.e., ISUP and TCAP) to the CCA. Similarly, the SG will receive CCS7 call control and service control messages from the CCA. The SG is responsible for the appropriate formatting of the messages for transmission on the CCS7 links. This is a conditional requirement for LSCs and is not supported by the SUT.

**j. WWNDP Requirements.**

(1) WWNDP. The precedence level and dialed number input to the PEI or AEI shall be as specified in UCR 2008, Section 5.2.3.5.1.2, Inter-switch and Intra-switch Dialing. The SUT met all requirements for WWNDP for PEIs only.

(2) DSN WWNDP. LSCs must support DSN WWNDP and must support mapping of DSN telephone numbers to SIP URIs, provides examples of DSN numbers using SIP URIs that use the syntax defined in RFC 3966. The SUT met all DSN WWNDP requirements for PEIs only.

**k. Commercial Cost Avoidance:** Commercial Cost Avoidance. The LSC must use a Commercial Cost Avoidance functionality to route calls from an IP EI to a PSTN E.164 number in a manner which will minimize commercial costs associated with DSN calls. This is a new UCR 2008, Change 1, requirement; this discrepancy was adjudicated by DISA to have a minor operational impact with the vendor's PoAM to fix in September 2011.

**l. AS-SIP Based for External Devices (Voicemail, Unified Messaging and Automated Receiving Devices).** The LSC shall support all mandatory requirements in RFC 3842. The LSC shall support all mandatory requirements in IETF Internet Draft draft-levy-sip-diversion-08.txt, Diversion Indication in SIP. The SUT was tested with the Communication Manager Messenger (CMM).

**m. Precedence Call Diversion.** The AS-SIP signaling appliance shall divert ALL unanswered RTS VoIP calls above the ROUTINE precedence level to a designated RTS DN for PCD. The SUT met all precedence call diversion requirements.

**n. Attendant Station Features.** The SUT met the Attendant Station Features with their 302C Attendant Consoles.

(1) Precedence and Preemption. The RTS Attendant Console shall interoperate with PBAS/ASAC.

(2) Call Display. The RTS Attendant Console shall provide a visual display of each precedence level and the calling number, for incoming direct dialed calls to the attendant, and diverted calls to the attendant.

(3) Class of Service Override. If the LSC, MFSS, or WAN SS supports assignment of a CoS to an individual EI, then this appliance and the attendant console shall give the attendant the ability to override any incoming call's calling party CoS (based on calling area or precedence) on a call-by-call basis.

(4) Busy Override and Busy Verification. The appliance and the attendant console shall give the attendant the ability to verify and override a busy line condition.

(5) Night service. The appliance and the attendant console shall have the ability to route all calls that are normally directed to the console to a separate night service deflection number.

(6) Automatic Recall of Attendant. When an attendant redirects an incoming call to a destination station, and that station is either busy or does not answer the call within a preset time, the appliance and the attendant console shall ensure that calling party on the redirected call is recalled automatically to the console.

(7) Calls in Queue to the Attendant. The appliance and the attendant console shall have the ability to place calls (both directed to the attendant and diverted to the attendant) into a waiting queue.

**o. AS-SIP Requirements.**

(1) SIP Requirements for AS-SIP Signaling Appliances and AS-SIP EIs. The LSCs that support SIP EIs must comply with the differentiated set of requirements defined for SIP EIs if they serve SIP EIs and LSCs MUST comply with the differentiated set of requirements defined for H.323 and/or vendor-proprietary EIs if they serve H.323 and/or vendor-proprietary EIs. The SUT met all requirements for AS-SIP trunk signaling and ITU.T H.323 PEI signaling.

(2) SIP Session Keep-Alive Timer. The AS-SIP signaling appliances MUST support the keep-alive mechanism for SIP sessions in accordance with RFC 4028. The SUT met all keep-alive timer requirements.

(3) Session Description Protocol (SDP). A session description consists of a session-level description (details that apply to the whole session and all media streams) and optionally several media-level descriptions (details that apply to a single media stream). The LSC must support SDP in accordance with RFC 2327. The SUT met all SDP requirements.

(4) Precedence and Preemption. The LSC must meet the detailed requirements for the execution of preemption and the handling of precedence information as defined in section 5.3.4.2.10 of the UCR. The SUT met all critical precedence and preemption requirements.

(5) Video Telephony – General Rules. Video calls must meet the detailed requirements for video telephony messaging as defined in section 5.3.4.12 of the UCR. Video telephony requirements were not tested on the SUT. The SUT does not support PEI or AEI video EIs. This was adjudicated by DISA to have minor operational impact because of the limited deployment of PEIs with video.

(6) Calling Services. The LSC must meet AS-SIP call flow requirements for calling services features as defined in section 5.3.4.13 of the UCR. The SUT met the

Calling Services requirements with the following with the following exceptions adjudicated by DISA as having a minor operational impact with a Vendor PoAM to fix in their next major CM release scheduled for July 2012:

- Call Forwarded calls above ROUTINE ring the destination at ROUTINE cadence although the precedence level is maintained.
- Unattended Call Transfers to the Avaya AS5300 @ precedence above ROUTINE are class marked at ROUTINE.
- Instruments assigned the Hotline Feature cannot restrict other features (i.e. Hold, Transfer, Add hock Conferencing, etc.)
- SUT plays Precedence Notification Tone (PNT) to an active user for only 3 seconds. The requirement is indefinite or till user hangs up.

(7) SIP Translation Requirements for Inter-working AS-SIP Signaling Appliances. This specification uses SIP translation for converting between ISUP signaling and AS-SIP signaling but does not use SIP encapsulation of ISUP. This requirement applies to translations between AS-SIP and CCS7. CCS7 is a conditional interface not supported by the SUT.

(8) Relevant Timers for the Terminating Gateway and the Originating Gateway. This requirement applies to gateways between AS-SIP and CCS7 links. The SUT met all requirements for Timers for the Termination Gateway and the Originating Gateway.

(9) SIP Requirements for Interworking AS-SIP Signaling Appliances. Interworking AS-SIP signaling appliances MUST comply with UCR 2008 Section 5.3.4.7.1, AS-SIP Signaling Appliances and AS-SIP EIs, as well as the additional general requirements in UCR 2008 Section 5.3.4.16. The SUT met all requirements for interworking AS-SIP signaling appliances.

(10) Keep-Alive Timer Requirements for Interworking AS-SIP Signaling Appliances. Interworking AS-SIP signaling appliances MUST comply with UCR 2008, Section 5.3.4.8, SIP Session Keep-Alive Timer, as well as the additional E1 requirements listed in UCR 2008 Section 5.3.4.17. The SUT met all keep-alive timer requirements for interworking AS-SIP signaling appliances.

(11) Precedence and Preemption Extensions for Interworking AS-SIP Signaling Appliances. The LSC must meet all requirements for header fields as listed in UCR 2008 section 5.3.4.18. The SUT met all requirements for precedence and preemption extensions for interworking AS-SIP signaling appliances.

(12) Supplementary Services. The LSC must meet call flow requirements as described in section 5.3.4.19. The SUT met the Supplementary Services requirements with the following with the following exceptions adjudicated by DISA as having a minor operational impact with a Vendor PoAM to fix in their next major CM release scheduled for July 2012:

- Call Forwarded calls above ROUTINE ring the destination at ROUTINE cadence although the precedence level is maintained.
- Unattended Call Transfers to the Avaya AS5300 @ precedence above ROUTINE are class marked at ROUTINE.
- Instruments assigned the Hotline Feature cannot restrict other features (i.e. Hold, Transfer, Add hock Conferencing, etc.)
- SUT plays Precedence Notification Tone (PNT) to an active user for only 3 seconds. The requirement is indefinite or till user hangs up.

**p. IPv6 Requirements.** The SUT the IPv6 requirements in accordance with UCR 2008 section 5.3.5. This requirement was met with testing and vendor's LoC. The SUT G450 gateways provide IPv4 to IPv6 dual stack translations for both intra-and inter-switch calls. The SUT was however only tested and certified for intra-enclave dual stack due to limitations of IPv6 dual stack capable products in the test architecture. End-to-End testing IPv6 testing of multi-vendors will be tested at a later date in 2011.

**q. NM Requirements.** The Vendor submitted an NM LoC with noted discrepancies. Open TDRs were adjudicated by DISA to have a minor operational impact with vendor submitted PoAM. The vendor submitted PoAM states that the discrepancies listed in the subparagraphs below will be fixed in their next major CM release scheduled for July 2012. .

(1) LSC Management Function. The LSC Management function supports functions for LSC FCAPS management and audit logs. This was met by the SUT with a vendor submitted LoC.

(2) VVoIP NMS Interface Requirements. The physical interface between the DISA VVoIP EMS and the network components (i.e., LSC, MFSS, EBC, CE Router) is a 10/100-Mbps Ethernet interface. The interface will work in either of the two following modes using auto-negotiation: IEEE, Ethernet Standard 802.3, 1993; or IEEE, Fast Ethernet Standard 802.3u, 1995. This was met by the SUT with a vendor submitted LoC and testing.

(3) General Management Requirements. The SUT components shall each have an individual pair of Ethernet interfaces for management purposes, even in cases where the SS or LSC component contains multiple physical devices. The SUT does not support EMS requests for resource inventory. The discrepancies were stated in the Vendor supplied LoC and were noted.

(4) Requirement for FCAPS Management. The SUT must meet all general requirements for the Fault, Configuration, Accounting, Performance, and Security (FCAPS) management functional areas as defined in UCR 2008 Section 5.3.2.17. The SUT met the NM FCAPS requirements a vendor LoC with one exception. The SUT does not have the ability to limit calls to a destination based on percentage of calls. This was adjudicated by DISA as having a minor operational impact.

.

(5) NM requirements of Appliance Functions. The SUT must meet all management requirements for ASAC, CCA, and MG functions as defined in UCR 2008 Section 5.3.2.18. The SUT meets the NM requirements of appliance functions. This requirement was satisfied with a vendor LoC.

(6) Accounting Management. Identifies a set of events during which call detail information is collected. These events are call connect, call attempt, and call disconnect. When these events are detected, specific call data will be provided by the network appliances that were involved in the event. The SUT met accounting management requirements with the following exceptions which were adjudicated by DISA as having a minor operational impact with a vendor PoAM of May 2012:

- Does Not Comply with E-Model MOS in the Call Detail Record (CDR) Requirements.
- Does Not Support the Equipment Impairment Factor (Ie) and the TCLw.
- Does Not Generate Alarms to the VVoIP EMS when E-Model R-factor record in CDR is not met.
- Does not provide a CDR with the R-Factor and associated raw statistics.

**11.3 Information Assurance.** Detailed IA requirements and associated criteria for the SUT are listed in Reference (c) Section 5.4. Detailed test procedures were conducted using the IATP and results can be found in the IA Assessment Report, reference (g) and (h).

**11.4 Other.** None.

**12. TEST AND ANALYSIS REPORT.** No detailed test report was developed in accordance with the Program Manager's request. JITC distributes interoperability information via the JITC Electronic Report Distribution (ERD) system, which uses Unclassified-But-Sensitive Internet Protocol Router Network (NIPRNet) e-mail. More comprehensive interoperability status information is available via the JITC System Tracking Program (STP). The STP is accessible by .mil/gov users on the NIPRNet at https://stp.fhu.disa.mil. Test reports, lessons learned, and related testing documents and references are on the JITC Joint Interoperability Tool (JIT) at http://jit.fhu.disa.mil (NIPRNet). Information related to DSN testing is on the Telecom Switched Services Interoperability (TSSI) website at http://jitc.fhu.disa.mil/tssi. All associated data is available on the Defense Information Systems Agency Unified Capability Coordination Office (UCCO) website located at http://www.disa.mil/ucco/.

## SYSTEM FUNCTIONAL AND CAPABILITY REQUIREMENTS

The Internet Protocol Call Control products have required and conditional features and capabilities that are established by the Unified Capabilities Requirements (UCR). The System Under Test (SUT) need not provide conditional requirements. If they are provided, they must function according to the specified requirements. The detailed Functional requirements (FR) and Capability Requirements for Multi-Function SoftSwitch (MFSS), Local Session Controller (LSC), and Wide Area Network SoftSwitch (WAN SS) are listed in Table 3-1. Detailed Information Assurance (IA) requirements are included in Reference (e) and are not listed below.

### Table 3-1. Unified Capabilities Products Capability/Functional Requirements Table

| ID | Requirement | UCR Ref (UCR 2008 CH1) | MFSS | LSC | WAN SS |
|---|---|---|---|---|---|
| 1 | As part of the session setup process, the LSC controls what DSCP to use in the subsequent session media stream packets. (two sub requirements) | 5.3.2.2.1.4 | Y | Y | |
| 2 | The SUT must provide the following features: Precedence Call Waiting, Call Forwarding, Call Transfer, Call Hold, Three-Way Calling, Hotline Service, and Calling Party and Called Party ID. | Table 5.3.2.2-1 | Y | Y | |
| 3 | Calls to a DN that does not have any CF feature activated shall be delivered to the DN EI IAW the MLPP procedures specified in UCR 2008, Section 5.2.2 Multilevel Precedence and Preemption | 5.3.2.2.2.1.1 | Y | Y | |
| 4 | Call forwarding, when activated on a line DN, shall allow any terminating call at a ROUTINE DSN precedence level, to be completed to the designated destination (IAW the call forward options activated), and shall comply with the requirements as stated in Telcordia Technologies GR-217-CORE, GR-580-CORE, and GR-586-CORE. | 5.3.2.2.2.1.1 | Y | Y | |
| 5 | Calls to 911 shall be preempted in accordance with assured service priority rules specified in UCR 2008, Section 5.2.2, Multilevel Precedence and Preemption. | 5.3.2.2.2.2.1 | Y | Y | |
| 6 | The Tracing of Terminating Calls feature identifies the calling number on intraoffice and interoffice calls terminating to a specified DN. When this feature is activated, the originating DN, the terminating DN, and the time and date are printed out for each call to the specified line. | 5.3.2.2.2.2.2 | Y | Y | |
| 7 | The Outgoing Call Tracing feature allows the tracing of nuisance calls to a specified DN suspected of originating from a given local office. The tracing is activated when the specified DN is entered. A printout of the originating DN, and the time and date, are generated for every call to the specified DN. | 5.3.2.2.2.2.3 | Y | Y | |
| 8 | The Tracing of a Call in Progress feature identifies the originating DN for a call in progress. Authorized personnel entering a request that includes the specific terminating DN involved in the call activate the feature. | 5.3.2.2.2.2.4 | Y | Y | |
| 9 | The Tandem Call Trace feature identifies the incoming trunk of a tandem call to a specified office DN. The feature is activated by entering the specified distant office DN for a tandem call trace. A printout of the incoming trunk number and terminating DN, and the time and date, is generated for every call to the specified DN. | 5.3.2.2.2.2.5 | Y | Y | |
| 10 | One voice session budget unit shall be equivalent to 110 kilobits per second (kbps) of access circuit bandwidth independent of the PEI or AEI codec used. This includes ITU-T Recommendation G.711 encoding rate plus Internet Protocol Version 6 (IPv6) packet overhead plus ASLAN Ethernet overhead. IPv6 overhead, not IPv4 overhead, is used to determine bandwidth equivalents here. | 5.3.2.2.2.3.1 | Y | Y | |
| 11 | If the MFSS's count of an IPC is greater than or equal to the corresponding IPB, and it receives an INVITE request for a precedence session, the MFSS shall preempt a lower priority session (if such a session exists), and then proceed with processing the higher precedence session connect request. | 5.3.2.2.2.3.1.2 | Y | | |
| 12 | If the MFSS receives a CCA-ID for which there is no entry in ASAC budget table, the SS will reject the session and generate an alarm for the EMS. | 5.3.2.2.2.3.1.2 | Y | | |
| 13 | If necessary, the MFSS will preempt for a session request that is at precedence level FLASH OVERRIDE or FLASH and the counts equal the budgets. | 5.3.2.2.2.3.2 | Y | | |
| 14 | Registration and authentication between NEs shall follow the requirements set forth in UCR 2008, Section 5.4, Information Assurance Requirements. | 5.3.2.3.1 | Y | Y | |

## Table 3-1. Unified Capabilities Products Capability/Functional Requirements Table (continued)

| ID | Requirement | UCR Ref (UCR 2008 CH1) | MFSS | LSC | WAN SS |
|---|---|---|---|---|---|
| 15 | The LSCs shall be registered to a primary and backup MFSS. In case of failure of the primary MFSS, the LSC will default to the backup MFSS. | 5.3.2.3.2 | Y | Y | |
| 16 | The LSC shall send an OPTIONS request with a Request-URI identifying the primary SS (the Request-URI does not have a userinfo part) on a configurable periodic time interval (default equals 45 seconds; minimum time interval equals 35 seconds). (4 sub requirements) | 5.3.2.3.2.2 | | Y | |
| 17 | When a properly functioning primary SS receives the OPTIONS request from a served LSC, the primary SS shall respond with a 200 OK response that includes the Accept header and the Supported header. | 5.3.2.3.2.2 | Y | | Y |
| 18 | When the LSC sends a defined configurable number of successive OPTIONS requests (default equals 2) for which there either is no response or the response is a 408 (Request Time-Out), 503 (Service Unavailable), or 504 (Server Time-Out) response, then it must failover to the secondary SS. (3 sub requirements) | 5.3.2.3.2.3 | | Y | |
| 19 | If the LSC receives a 200 OK response to an OPTIONS request from the primary SS before the configurable number of successive failures to the OPTIONS requests (default equals 2) has been reached, then no action is taken to failover to the secondary SS. | 5.3.2.3.2.3 | | Y | |
| 20 | Upon failover, the LSC will send OPTIONS requests to the primary SS at a failback configurable periodic time interval (default equals 60 seconds; minimum time interval equals 35 seconds). (4 sub requirements) | 5.3.2.3.2.4 | | Y | |
| 21 | Each SS shall send an OPTIONS request to every other SS on a “standard” configurable periodic time interval (default equals 45 seconds; minimum time interval equals 35 seconds). | 5.3.2.3.2.5 | Y | | Y |
| 22 | Whenever an originating SS sends an INVITE request to another SS and receives either a 408 (Request Time-Out), 503 (Service Unavailable), or 504 (Server Time-Out) response and the originating SS is not already awaiting a response to a pending OPTIONS request to the other SS, then the originating SS shall send an OPTIONS request with a Request-URI identifying the SS. | 5.3.2.3.2.5 | Y | | Y |
| 23 | When a properly functioning SS receives the OPTIONS request, the SS shall respond with a 200 OK response that includes the Accept header and the Supported header. | 5.3.2.3.2.5 | Y | | Y |
| 24 | Each MFSS (SS) shall be configured with knowledge of each pair of SSs that act as backups for each other. (7 sub requirements) | 5.3.2.3.2.6 | Y | | Y |
| 25 | Upon failover, the SS will send OPTIONS requests to the failed SS at a “failback” configurable periodic time interval (default equals 60 seconds; minimum time interval equals 35 seconds). (5 sub requirements) | 5.3.2.3.2.7 | Y | | Y |
| 26 | The Assured Services subsystem shall have a hardware/software availability of 0.99999 (nonavailability of no more than 5 minutes per year). | 5.3.2.5.2.1 | Y | Y | |
| 27 | The performance parameters associated with the ASLAN, MFSS, and LSC, when combined, shall meet the following maximum downtime requirements:<br>• IP (10/100 Ethernet) network links – 35 minutes/year<br>• IP subscriber – 12 minutes/year | 5.3.2.5.2.2 | Y | Y | |
| 28 | For these VoIP devices, the voice quality shall have a MOS of 4.0 (R-Factor equals 80) or better, as measured in accordance with the E-Model. Additionally, these devices shall not lose two or more consecutive packets in a minute and shall not lose more than seven voice packets (excluding signaling packets) in a 5-minute period. | 5.3.2.5.4 | Y | Y | |
| 29 | An IP voice instrument shall be designed in accordance with the acquiring activity requirements, but the following capabilities are specifically required as indicated:<br>• **[Objective]** DoD Common Access Card (CAC) reader<br>• **[Required]** Display calling number<br>• **[Required]** Display precedence level of the session<br>• **[Required]** Support for Dynamic Host Configuration Protocol (DHCP). | 5.3.2.6.1 | Y | Y | |
| 30 | Tones and announcements, as required in UCR 2008, Sections 5.2.4.5.2, DSN Information Signals, and Section 5.2.2.1.3, Announcements, shall be supported, except for the loss of C2 announcement. | 5.3.2.6.1.1 | Y | Y | |
| 31 | The product shall support the origination and termination of a voice session using the following codecs:<br>• ITU-T Recommendation G.711, to include both the μ-law and A-law algorithms<br>• ITU-T Recommendation G.723.1<br>• ITU-T Recommendation G.729 or G.729A<br>• ITU-T Recommendation G.722.1 | 5.3.2.6.1.2 | Y | Y | |

## Table 3-1. Unified Capabilities Products Capability/Functional Requirements Table (continued)

| ID | Requirement | UCR Ref (UCR 2008 CH1) | MFSS | LSC | WAN SS |
|---|---|---|---|---|---|
| 32 | Voice over IP PEIs or AEIs (i.e., handset, headset, and hands-free types) shall comply with TIA-810-B, November 3, 2006. | 5.3.2.6.1.3 | Y | Y | |
| 33 | For Fixed-to-Fixed calls, the product shall use 20 ms as the default voice sample length, and as the basis for the voice payload packet size. | 5.3.2.6.1.4 | Y | Y | |
| 34 | The PEI or AEI shall be capable of authenticating itself to its associated LSC and vice versa. | 5.3.2.6.1.5<br>5.3.2.6.2.3 | Y | Y | |
| 35 | Analog instruments, including secure analog EIs, analog facsimile EIs, and analog modem EIs, shall be supported by the LSC either by a TA or an Integrated Access Device (IAD) connected to an Ethernet port. | 5.3.2.6.1.6 | Y | Y | |
| 36 | The LSC shall meet all the requirements for PBAS/ASAC, as appropriate for VoIP and Video over IP services, as specified in UCR 2008, Section 5.2.2, Multilevel Precedence and Preemption. | 5.3.2.7.2.1 | | Y | |
| 37 | The LSC shall support CND, as specified in UCR 2008, Section 5.2.3.5.1.8.2, Calling Number Delivery. | 5.3.2.7.2.2 | | Y | |
| 38 | The LSC must provide signaling on the line side for local intra-enclave subscriber-to-subscriber calls, and trunk-side signaling for calls between an external enclave and a local subscriber. | 5.3.2.7.2.3 | | Y | |
| 39 | In the event that a total loss of connectivity to the DISN WAN occurs, the LSC shall provide the following functions:<br>• Completion of local (intra-enclave) calls<br>• Routing of calls to the PSTN using a local MG (PRI or CAS as required by the local interface)<br>• User look-up of local directory information | 5.3.2.7.2.4 | | Y | |
| 40 | The LSC Management function supports functions for LSC FCAPS management and audit logs. Collectively, these functions are called FCAPS Management and Audit Logs. | 5.3.2.7.2.6 | | Y | |
| 41 | The LSC Transport Interface functions provide interface and connectivity functions with the ASLAN and its IP packet transport network. | 5.3.2.7.2.7 | | Y | |
| 42 | The LSC shall provide an interface to the DISA NMS. The interface consists of a 10/100-Mbps Ethernet connection | 5.3.2.7.2.8 | | Y | |
| 43 | Periodically, the LSC shall verify the status of its registered and authenticated IP EIs, including operator (dial service attendant) consoles. The verification interval shall be configurable with the default set at 5 minutes. | 5.3.2.7.2.10 | | Y | |
| 44 | Line-side custom features must not interfere with the Assured Services requirements. | 5.3.2.7.2.11 | | Y | |
| 45 | During the call establishment process, the product shall be capable of preventing or detecting and stopping hair-pin routing loops over ANSI T1.619a and commercial PRI trunk groups (i.e., T1 PRI and E1 PRI) between a legacy switch (e.g., TDM EO) and an LSC | 5.3.2.7.3 | | Y | |
| 46 | When the AS-SIP TDM Gateway receives a call request over an ISDN MLPP PRI then the AS-SIP TDM Gateway MUST map the telephony numbers received from the Q.931 SETUP message to SIP URIs | 5.3.2.7.4.3.3 | Y | Y | |
| 47 | The AS-SIP TDM Gateway MG MUST support the ITU-T Recommendation G.711 (μ-law and A-law) audio codec. | 5.3.2.7.4.3.4 | Y | Y | |
| 48 | The AS-SIP TDM Gateway MG MUST support RFC 4040 and the AS-SIP TDM Gateway MUST support the signaling for establishing the 64kbps unrestricted bearer per Section 5.3.4.7.7, 64 kbps Transparent Calls (Clear Channel). | 5.3.2.7.4.3.4 | Y | Y | |
| 49 | The AS-SIP TDM Gateway MG MUST support T.38 Fax Relay | 5.3.2.7.4.3.4 | Y | Y | |
| 50 | The AS-SIP TDM Gateway MG MUST support the SCIP-216 subset of V.150.1 Modem Relay (see Section 5.3.2.21.2, RTS SCIP Gateway Requirements) and the AS-SIP TDM Gateway MUST support the AS-SIP signaling requirements in support of modem relay | 5.3.2.7.4.3.4 | Y | Y | |
| 51 | The AS-SIP TDM Gateway MUST satisfy the Information Assurance requirements in Section 5.4 Information Assurance for a media gateway. | 5.3.2.7.4.3.5 | Y | Y | |
| 52 | The AS-SIP TDM Gateway MUST provide an interface to the DISA NMS. The interface MUST consist of a 10/100-Mbps Ethernet connection | 5.3.2.7.4.3.9 | Y | Y | |
| 53 | The AS-SIP IP Gateway MUST implement call count thresholds for voice sessions and for video sessions in order to perform Session Admission Control (SAC). | 5.3.2.7.5.1.1 | Y | Y | |
| 54 | The requirements for the TDM side of the MFSS are entirely the same as for the DSN MFS specified in UCR 2008, Section 5.2, Circuit-Switched Capabilities and Features. The TDM side of the MFSS must meet these requirements. | 5.3.2.8.2.1 | Y | | |
| 55 | MFSS shall support PRI signaling for TDM communication with other systems. | 5.3.2.8.2.3 | Y | | |

## Table 3-1. Unified Capabilities Products Capability/Functional Requirements Table (continued)

| ID | Requirement | UCR Ref (UCR 2008 CH1) | MFSS | LSC | WAN SS |
|---|---|---|---|---|---|
| 56 | The TDM side of the MFSS shall support CCS7 signaling for communication with other TDM systems. | 5.3.2.8.2.3 | Y | | |
| 57 | MFSS shall support AS-SIP signaling for IP communication with other MFSSs and LSCs. | 5.3.2.8.2.3 | Y | | |
| 58 | The MFSS shall provide internal signaling and media conversion for calls between the TDM side and SS side of the MFSS. | 5.3.2.8.2.3 | Y | | |
| 59 | The CCA/SG/MGC/MG complex in the SS side of the MFSS needs to interface and interact with the EO and Tandem functions in the TDM side of the MFSS. | 5.3.2.8.2.4 | Y | | |
| 60 | The MFSS MG must support internal MG connections that interconnect the SS side of the MFSS with the EO and Tandem functions on the TDM side of the MFSS. | 5.3.2.8.2.4 | Y | | |
| 61 | The MFSS MG shall interact with the MFSS MGC so that Internal MG connections between the SS and TDM sides of the MFSS support<br>(1) Intra-MFSS calls between TDM EIs connected to the TDM side, and PEIs/AEIs connected to the SS side of the MFSS<br>(2) Incoming and outgoing calls to/from systems external to the MFSS that require conversion between TDM and IP | 5.3.2.8.2.4 | Y | | |
| 62 | When a U.S. ISDN PRI-based connection is used between the SS and TDM sides of the MFSS, the MFSS MG shall interact with the MFSS MGC so that U.S. ISDN PRI signaling (National ISDN PRI signaling with the Precedence Level IE and related MLPP IEs included) is used between the softswitch and TDM sides, and the T1.619/T1.619a version of the ISDN PRI MLPP feature operates correctly between the SS and TDM sides of the MFSS, for both VoIP-to-TDM calls and TDM-to-VoIP calls over this trunk group. | 5.3.2.8.2.4 | Y | | |
| 63 | The SS side of the MFSS shall meet all the requirements for MLPP, as appropriate for VoIP and Video over IP services, as specified in Section 5.2.2, Multilevel Precedence and Preemption. | 5.3.2.8.2.6 | Y | | |
| 64 | The SS side of the MFSS shall support CND as specified in UCR 2008, Section 5.2.3.5.1.8.2, Calling Number Delivery. | 5.3.2.8.2.6 | Y | | |
| 65 | The requirements for SCS functions (i.e., CCA, IWF, MG, MGC, and SG) and NM are provided in separate sections of this document. The MFSS must meet all these requirements. | 5.3.2.8.2.6 | Y | | |
| 66 | The CCA IWF must support AS-SIP and ISDN PRI protocols. | 5.3.2.9.2.1 | Y | Y | |
| 67 | The MGC within the CCA must control all MGs within the LSC or MFSS, support DoD ISDN trunks, control all signaling and media streams on each trunk within each MG, and accept IP-encapsulated singaling streams from an SG or MG. | 5.3.2.9.2.2 | Y | Y | |
| 68 | The CCA shall be responsible for controlling all the SGs within the MFSS and LSC. | 5.3.2.9.2.3 | Y | C | |
| 69 | The CCA shall be responsible for controlling each signaling link within each SG within the MFSS or LSC. | 5.3.2.9.2.3 | Y | C | |
| 70 | The CCA shall be responsible for controlling the DoD CCS7 signaling stream(s) within each signaling link within each SG. | 5.3.2.9.2.3 | Y | C | |
| 71 | Within the network appliance (i.e., MFSS and LSC), the CCA shall use either an IETF-standard set of CCS7-over-IP protocols, or a supplier-proprietary protocol to accomplish the above SG, signaling link, and signaling stream controls. | 5.3.2.9.2.3 | Y | C | |
| 72 | The CCA IWF shall support the AS-SIP protocol consistent with the detailed AS-SIP protocol requirements in Section 5.3.4, AS-SIP Requirements. | 5.3.2.9.5.1 | Y | Y | |
| 73 | The CCA IWF shall use the AS-SIP protocol on LSC-MFSS and MFSS-MFSS sessions. | 5.3.2.9.5.1 | Y | Y | |
| 74 | When the CCA IWF uses the AS-SIP protocol over the Access Segment between the EBC and the DISN WAN, or over the DISN WAN itself, the CCA IWF shall secure the AS-SIP protocol using TLS. | 5.3.2.9.5.1 | Y | Y | |
| 75 | The CCA IWF shall support the U.S./National ISDN version of the ISDN PRI protocol. | 5.3.2.9.5.3 | Y | Y | |
| 76 | The CCA IWF shall support reception of ISDN PRI messages from the MG and transmission of ISDN PRI messages to the MG. | 5.3.2.9.5.3 | Y | Y | |
| 77 | The CCA IWF shall be able to determine the ISDN PRI (and its D-Channel signaling link) that an incoming PRI message was received on, when processing an incoming PRI message from the MG. | 5.3.2.9.5.3 | Y | Y | |
| 78 | The CCA IWF shall be able to identify the ISDN PRI (and its D-Channel signaling link) that an outgoing PRI message will be sent on, when generating an outgoing PRI message to the MG. | 5.3.2.9.5.3 | Y | Y | |

## Table 3-1. Unified Capabilities Products Capability/Functional Requirements Table (continued)

| ID | Requirement | UCR Ref (UCR 2008 CH1) | MFSS | LSC | WAN SS |
|---|---|---|---|---|---|
| 79 | The CCA IWF shall be able to support multiple ISDN PRIs (and their D-Channel signaling links) at the MG, where each PRI is connected to a different PRI end point. | 5.3.2.9.5.3 | Y | Y | |
| 80 | The CCA IWF shall be able to differentiate between the individual ISDN PRIs (and their D-Channel signaling links) at the MG. | 5.3.2.9.5.3 | Y | Y | |
| 81 | The CCA IWF shall support the full set of ISDN MLPP requirements in ANSI T1.619 and ANSI T1.619a. | 5.3.2.9.5.3 | Y | Y | |
| 82 | The CCA IWF shall not support any of the ISDN MLPP requirements in ANSI T1.619 and ANSI T1.619a, on ISDN PRIs to TDM PBXs and switches in the U.S. PSTN. | 5.3.2.9.5.3 | Y | Y | |
| 83 | On ISDN PRIs from the CCA/MG to TDM PBXs and switches in allied and coalition partners (where those networks support U.S. “National ISDN” PRI), the CCA IWF shall support a DoD-user-configurable per-PRI option that allows the PRI to support or not support the ANSI T1.619/619a PRI MLPP feature on calls to and from that PRI. | 5.3.2.9.5.3 | Y | Y | |
| 84 | The CCA IWF shall be able to associate individual PRI configuration data with each individual PRI served by the MG and the CCA. The CCA IWF shall not require groups of PRIs served by the MG and the CCA to share “common” PRI configuration data. | 5.3.2.9.5.3 | Y | Y | |
| 85 | The CCA IWF shall support supplier-proprietary Voice and Video EIs and their associated proprietary EI signaling protocols. | 5.3.2.9.5.5 | Y | Y | |
| 86 | The CCA in the LSC, MFSS, and WAN SS shall not allow AS-SIP sessions that have reached the ringing state (i.e., an AS-SIP 180 (Ringing) message or 183 (Session Progress) has been sent from the called party to the calling party, and the calling party is receiving an audible ringing tone) to fail when an internal failure occurs within the CCA. | 5.3.2.9.6 | Y | Y | |
| 87 | The MFSS CCA shall be able to support MG connections between the SS side of the MFSS and the EO and Tandem functions on the TDM side of the MFSS. | 5.3.2.10.1 | Y | | |
| 88 | The CCA shall support assignment of the following items to itself:<br>• Only one CCA IP address (this one IP address may be implemented in the CCA as either a single logical IP address or a single physical IP address),<br>• A CCA Fully Qualified Domain Name (FQDN) that maps to that IP address, and<br>• A CCA SIP URI that uses that CCA FQDN as its domain name, and maps to the “SIP B2BUA” function within the CCA itself. | 5.3.2.10.3 | Y | Y | |
| 89 | The CCA shall support assignment of the following items to each SIP and AS-SIP PEI and AEI on the Appliance LAN:<br>• Only one PEI or AEI IP address,<br>• A PEI or AEI FQDN that maps to that IP address, and<br>• A PEI or AEI SIP URI that uses that PEI or AEI FQDN as its domain name, and maps to the “SIP User Agent” function within the PEI or AEI. | 5.3.2.10.3 | Y | Y | |
| 90 | The CCA shall support assignment of the following items to each MG on the Appliance LAN:<br>• Only one MG IP address (this one IP address may be implemented in the MG as either a single logical IP address or a single physical IP address),<br>• An MG FQDN that maps to that IP address, and<br>• An MG SIP URI that uses that MG FQDN as its domain name, and maps to the “UC Signaling and Media End Point” function within the MG. | 5.3.2.10.3 | Y | Y | |
| 91 | The CCA shall support assignment of the following items to each SG on the Appliance LAN:<br>• Only one SG IP address (this one IP address may be implemented in the SG as either a single logical IP address or a single physical IP address),<br>• An SG FQDN that maps to that IP address, and<br>• An SG SIP URI that uses that SG FQDN as its domain name, and maps to the “UC Signaling End Point” function within the SG | 5.3.2.10.3 | Y | C | |
| 92 | The CCA shall support assignment of the following items to the EBC:<br>• Only one EBC IP address (this one IP address may be implemented in the EBC as either a single logical IP address or a single physical IP address),<br>• An EBC FQDN that maps to that IP address, and<br>• An EBC SIP URI that uses that EBC FQDN as its domain name, and maps to the “SIP B2BUA” function within the EBC. | 5.3.2.10.3 | Y | Y | |
| 93 | When directing VoIP sessions to other network appliances providing voice and video services across the DISN, the CCA shall direct these VoIP sessions to the EBC, so that the EBC can process them before directing them to the network appliances on the DISN WAN. | 5.3.2.10.4 | Y | Y | |

## Table 3-1. Unified Capabilities Products Capability/Functional Requirements Table (continued)

| ID | Requirement | UCR Ref (UCR 2008 CH1) | MFSS | LSC | WAN SS |
|---|---|---|---|---|---|
| 94 | When accepting VoIP sessions from other network appliances on the DISN, the CCA shall accept these VoIP sessions from the EBC, because the EBC relays them from the network appliances on the DISN WAN. | 5.3.2.10.4 | Y | Y | |
| 95 | The LSC and MFSS CCA shall meet all the requirements in Section 5.3.2.2.2.3, ASAC – Open Loop.<br>The LSC and MFSS CCA shall meet all the requirements in Section 5.3.4.10, Precedence and Preemption.<br>The LSC and MFSS CCA shall meet all the requirements in Section 5.3.4.11, Policing of Call Count Thresholds. | 5.3.2.10.5 | Y | Y | |
| 96 | The CCA shall generate a redirecting number each time it forwards a VoIP or Video session request as part of a Call Forwarding feature. | 5.3.2.10.6 | Y | Y | |
| 97 | It is expected that all Assured Services products, such as LSCs and MFSSs, will support vendor-proprietary VVoIP features and capabilities, in addition to supporting the required VVoIP features and capabilities that are listed. | 5.3.2.10.6 | Y | Y | |
| 98 | The CCA shall relay received SIP and TLS authentication credentials and encryption key information from sending end systems (i.e., users, PEIs, AEIs, and EBCs) to the Information Assurance function to support the Information Assurance function's user, PEI, AEI, and EBC authentication capabilities, and its PEI, AEI, and EBC signaling stream encryption capabilities. | 5.3.2.10.7 | Y | Y | |
| 99 | The CCA MGC shall relay received H.248 and IPSec (or proprietary-protocol-equivalent) authentication credentials and encryption key information from sending end systems (i.e., MGs and SGs) to the Information Assurance function to support the Information Assurance function's MG and SG authentication capabilities, and its MG and SG signaling stream encryption capabilities. | 5.3.2.10.7 | Y | Y | |
| 100 | The CCA shall relay authentication credentials received in a SIP or AS-SIP REGISTER message from an PEI, AEI, or EBC to the Information Assurance function. | 5.3.2.10.7 | Y | Y | |
| 101 | The CCA shall relay TLS encryption key information received from a PEI or AEI to the Information Assurance function so the Information Assurance function can verify that this encryption key information can be used on the signaling streams for Voice or Video sessions to/from that PEI or AEI. | 5.3.2.10.7 | Y | Y | |
| 102 | The CCA shall relay TLS encryption key information received from an EBC to the Information Assurance function so the Information Assurance function can verify that this encryption key information can be used on the signaling streams for the Voice or Video sessions to/from that EBC. | 5.3.2.10.7 | Y | Y | |
| 103 | The CCA within the appliance shall support all Information Assurance Appliance requirements in Section 5.4, Information Assurance Requirements, which involve the appliance's SCS functions and the appliance's MGC. | 5.3.2.10.7 | Y | Y | |
| 104 | The CCA shall support supplier-proprietary Voice and Video EIs, using EI-CCA protocols that are proprietary to the LSC or MFSS supplier. | 5.3.2.10.10 | Y | Y | |
| 105 | When the CCA IWF supports AS-SIP Voice and Video AEIs, the IWF shall support these AEIs using the set of AS-SIP protocol requirements in Section 5.3.2.22, Generic AS-SIP End Instrument and Video Codec Requirements, and Section 5.3.4, AS-SIP Requirements. | 5.3.2.10.10 | Y | Y | |
| 106 | The Appliance CCA (i.e., LSC or MFSS) shall support both assured Voice and Video services. The CCA shall support both assured Voice and assured Video sessions, and shall support these sessions from both VoIP EIs and Video EIs, as described in UCR 2008, Section 5.3.2.10.10, CCA Interactions with End Instrument(s). | 5.3.2.10.11 | Y | Y | |
| 107 | The Appliance CCA shall support common procedures and protocol for VoIP and Video session control. | 5.3.2.10.11 | Y | Y | |
| 108 | The Appliance CCA shall support common procedures and protocol for feature control, for the features and capabilities given in Table 5.3.2.2-1, Assured Services Product Features and Capabilities. | 5.3.2.10.11 | Y | Y | |
| 109 | On calls to and from Proprietary VoIP and Proprietary Video EIs, the CCA shall use the appropriate parameters within the appliance supplier's Proprietary protocol messages to differentiate Proprietary VoIP sessions from Proprietary Video sessions. | 5.3.2.10.11 | Y | Y | |
| 110 | When AS-SIP EIs are supported on calls to and from AS-SIP EIs, the CCA shall use the SDP message bodies in AS-SIP INVITE, UPDATE, REFER, and ACK messages, as well as the SDP message bodies in AS-SIP 200 OK responses and earlier 1xx provisional responses, to differentiate AS-SIP Voice sessions from AS-SIP Video sessions. | 5.3.2.10.11 | Y | Y | |

## Table 3-1. Unified Capabilities Products Capability/Functional Requirements Table (continued)

| ID | Requirement | UCR Ref (UCR 2008 CH1) | MFSS | LSC | WAN SS |
|---|---|---|---|---|---|
| 111 | The CCA shall track VoIP sessions against corresponding Appliance VoIP budgets, and shall separately track Video sessions against corresponding Video budgets. The CCA shall maintain the Appliance's VoIP budgets separate from the Appliance's Video budget. | 5.3.2.10.11 | Y | Y | |
| 112 | As part of LSC-Level ASAC and WAN-Level ASAC Policing, the CCA shall support PBAS/ASAC for both VoIP sessions and Video sessions. | 5.3.2.10.11 | Y | Y | |
| 113 | The CCA shall allow an individual EI to support both VoIP and Video sessions. The CCA shall allow an individual EI to have both VoIP and Video sessions active at the same time. | 5.3.2.10.11 | Y | Y | |
| 114 | The CCA shall support the routing of both VoIP and Video session requests from LSCs to MFSSs, from MFSSs to LSCs, and from MFSSs to MFSSs, using AS-SIP. The CCA shall direct outgoing VoIP and Video session requests to EBCs, and shall accept incoming VoIP and Video session requests from EBCs, consistent with this LSC-to-MFSS routing, MFSS-to-LSC routing, and MFSS-to-MFSS routing. | 5.3.2.10.11 | Y | Y | |
| 115 | The CCA shall support the ability to remove VoIP and Video sessions and session requests from the media server so the CCA can continue with necessary session processing once the media server has completed its functions. | 5.3.2.10.12 | Y | Y | |
| 116 | The MG supports interconnection of VoIP, FoIP, and MoIP media streams with the following LSC functions and end-user devices:<br>a. The LSC media server, which provides tones and announcements for LSC calls and LSC features<br>b. AS-SIP VoIP, FoIP, and MoIP AEIs on the LSC | 5.3.2.12.3.1 | | Y | |
| 117 | The MFSS MG shall be able to support MG trunk groups (referred to as internal MG connections) that either interconnect the SS (VoIP) side of the MFSS with the EO or Tandem functions on the TDM side of the MFSS. | 5.3.2.12.3.2.1 | Y | | |
| 118 | On incoming call requests to a TDM trunk group, where the CCA/MGC applies a CAC Call Denial treatment to that call request, the MG shall connect the TDM called party on the incoming call request to the appropriate CAC Call Denial tone or announcement when instructed to do so by the MGC. | 5.3.2.12.4.1.1 | Y | Y | |
| 119 | On incoming calls or call requests to a TDM trunk group, where the CCA/MGC applies an ASAC Call Preemption treatment to that call or call request, the MG shall connect the TDM calling party on the incoming call or call request to the appropriate ASAC Call Preemption tone or announcement when instructed to do so by the MGC. | 5.3.2.12.4.1.1 | Y | Y | |
| 120 | On outgoing calls or call requests from a TDM trunk group, where the CCA/MGC applies an ASAC Call Preemption treatment to that call or call request, the MG shall connect the TDM called party on the outgoing call or call request to the appropriate ASAC Call Preemption tone or announcement when instructed to do so by the MGC. | 5.3.2.12.4.1.1 | Y | Y | |
| 121 | Each MG within an appliance shall support all the appliance requirements in Section 5.4, Information Assurance Requirements, that involve an Appliance MG. | 5.3.2.12.4.2 | Y | Y | |
| 122 | When instructed to do so by the MGC, the MG shall direct TDM calls and call requests to the media server. | 5.3.2.12.4.3 | Y | Y | |
| 123 | Since each Appliance MG is an IP endpoint on the Appliance LAN, each MG shall support assignment of the following items to itself:<br>• Only one MG IP address (This one IP address may be implemented in the CCA as either a single logical IP address or a single physical IP address.)<br>• An MG FQDN that maps to that IP address<br>• An MG SIP URI that uses that MG FQDN as its domain name, and maps to a "SIP User Agent" function within the MG. | 5.3.2.12.4.4 | Y | Y | |
| 124 | The MG shall interact with the Transport Interface functions in the appliances when the MG uses the native LAN protocols, IP, and UDP to exchange SRTP media streams with PEIs, AEIs, other MGs, and the EBC over the Appliance LAN | 5.3.2.12.4.4 | Y | Y | |
| 125 | When sending VoIP media streams to PEIs or AEIs and MGs served by other network appliances, the MG shall direct these VoIP media streams to the EBC so the EBC can process them before sending them on to the remote PEIs or AEIs and MGs via the DISN WAN. | 5.3.2.12.4.5 | Y | Y | |

## Table 3-1. Unified Capabilities Products Capability/Functional Requirements Table (continued)

| ID | Requirement | UCR Ref (UCR 2008 CH1) | MFSS | LSC | WAN SS |
|---|---|---|---|---|---|
| 126 | When accepting VoIP media streams from PEIs or AEIs and MGs served by other network appliances, the MG shall accept these VoIP media streams from the appliance EBC, because the EBC relays them from the DISN WAN and the remote PEIs or AEIs and MGs on the DISN WAN. The MG shall recognize and act on the network-level IP addresses of the remote PEIs or AEIs and MGs, when accepting the VoIP sessions through the EBC from the DISN WAN and the remote PEIs or AEIs and MGs. | 5.3.2.12.4.5 | Y | Y | |
| 127 | The MG shall support the exchange of VoIP media streams with the following voice PEIs and AEIs both on the local appliance and on remote network appliances:<br>a. Supplier-proprietary voice PEIs<br>b. Voice SIP EIs, when the appliance supplier supports these EIs<br>c. Voice H.323 EIs, when the appliance supplier supports these EIs<br>d. Voice AS-SIP AEIs | 5.3.2.12.4.8 | Y | Y | |
| 128 | The MG shall support the operation of the following features for VoIP and Video end users, consistent with the operation of this feature on analog and ISDN lines in DoD TDM switches today:<br>• Call Hold<br>• Music on Hold<br>• Call Waiting<br>• Precedence Call Waiting<br>• Call Forwarding Variable<br>• Call Forwarding Busy Line<br>• Call Forwarding No Answer<br>• Call Transfer<br>• Three-Way Calling<br>• Hotline Service<br>• Calling Party and Called Party ID (number only)<br>• Call Pickup | 5.3.2.12.4.9 | Y | Y | |
| 129 | Each appliance MG shall support TDM trunk groups that can interconnect with the following NEs in DoD networks, in the United States and worldwide:<br>• PBXs<br>• SMEOs<br>• EOs<br>• MFSs<br>Media Gateway support for these TDM trunk groups shall be identical to the support for these trunk groups in DoD TDM PBXs, EOs, Tandem switches, and MFSs today, as specified in UCR 2008, Section 5.2, Circuit-Switched Capabilities and Features. | 5.3.2.12.5 | Y | Y | |
| 130 | Each appliance MG shall support TDM trunk groups that can interconnect with NEs in the PSTN in the United States, including CONUS, Alaska, Hawaii, and U.S. Caribbean and Pacific Territories. Media Gateway support for these TDM trunk groups to the U.S. PSTN shall be identical to the support for these trunk groups in DoD TDM PBXs, EOs, Tandem Switches, and MFSs today, as specified in UCR 2008, Section 5.2, Circuit-Switched Capabilities and Features. | 5.3.2.12.7 | Y | Y | |
| 131 | The MG shall support foreign country ISDN PRI, where the MG handles both the media channels and the signaling channel:<br>1. For interconnection with a foreign country PSTN using foreign country ISDN PRI, from the country where the DoD user's B/P/C/S is located.<br>2. Support for ETSI PRI is required on LSC trunk groups when the LSC is used in OCONUS ETSI-compliant countries.<br>3. Support for ETSI PRI is required on MFSS trunk groups when the MFSS is used in OCONUS ETSI-compliant countries.<br>4. Support for MLPP using ISDN PRI is not required on the above trunk groups. | 5.3.2.12.8 | Y | Y | |
| 132 | The MG shall support ISDN PRI trunk groups that carry the U.S./National ISDN version of the ISDN PRI protocol. The MG shall support these U.S. PRI trunk groups conformant with the detailed U.S. ISDN PRI requirements. | 5.3.2.12.10 | Y | Y | |
| 133 | The MG shall support multiple U.S. PRI trunk groups based on the needs of the DoD user deploying the appliance. The MG shall allow each U.S. PRI trunk group at the MG to connect to: TDM EO and tandem components of the local MFSS; a different U.S. PSTN TDM NE (e.g., PBX, TDM switch); a different DoD TDM NE (e.g., PBX, TDM switch); or a different DoD IP NE (e.g., LSC, MFSS), based on the interconnection needs of the DoD user. | 5.3.2.12.10 | Y | Y | |
| 134 | The MG shall support reception of ISDN PRI messages from the CCA MGC and transmission of ISDN PRI messages to the CCA MGC. | 5.3.2.12.10 | Y | Y | |

## Table 3-1. Unified Capabilities Products Capability/Functional Requirements Table (continued)

| ID | Requirement | UCR Ref (UCR 2008 CH1) | MFSS | LSC | WAN SS |
|---|---|---|---|---|---|
| 135 | The MG shall connect to the ASLAN of the appliance using the physical layer and data link layer protocols of the ASLAN. In this case, the MG shall appear to the MGC, EBC, and appliance PEIs/AEIs as a physical layer and data link layer endpoint on a LAN switch in the ASLAN. | 5.3.2.12.12.1 | Y | Y | |
| 136 | The MG shall connect to the ASLAN of the appliance using the IP as a Network Layer Protocol. In this case, the MG shall appear to the MGC, EBC, and appliance PEIs/AEIs as an IP endpoint on an IP router on the ASLAN. | 5.3.2.12.12.2 | Y | Y | |
| 137 | The MG shall support IPv4 as a Network Layer Protocol. The MG shall also support IPv6 as a Network Layer Protocol. | 5.3.2.12.12.2 | Y | Y | |
| 138 | Conformant with Section 5.3.5, IPv6 Requirements, the MG shall support dual IPv4 and IPv6 stacks (i.e., support both IPv4 and IPv6 in the same IP end point) as described in RFC 4213. | 5.3.2.12.12.2 | Y | Y | |
| 139 | The MG shall support exchange of VoIP media streams with appliance PEIs/AEIs, other appliance MGs, and the appliance EBC (and through the appliance EBC, with other PEIs/AEIs and MGs on other network appliances) using the following IETF-defined Media Transfer Protocols:<br>• SRTP, conformant with RFC 3711<br>• SRTCP, conformant with RFC 3711 | 5.3.2.12.12.4 | Y | Y | |
| 140 | The MG shall secure all VoIP media streams exchanged with appliance PEIs/AEIs, other appliance MGs, and the appliance EBC (and through the EBC, with PEIs/AEIs and MGs on other network appliances) using SRTP and SRTCP. | 5.3.2.12.12.4 | Y | Y | |
| 141 | The MG shall use UDP as the underlying Transport Layer Protocol, and IP as the underlying Network Layer Protocol, when SRTP is used for media stream exchange. | 5.3.2.12.12.4 | Y | Y | |
| 142 | When the VoIP signaling streams contain supplier-proprietary protocol messages instead of H.248 or ISDN PRI messages, the MG shall secure the proprietary protocol message exchange with the MGC using mechanisms that are as strong as, or stronger than, the use of IPSec to secure H.248 and PRI message exchange. | 5.3.2.12.12.5 | Y | Y | |
| 143 | The MG shall support TDM voice streams using the following:<br>• ITU-T 64 kbps G.711 μ-law PCM over digital trunks<br>• ITU-T 64 kbps G.711 A-law PCM over digital trunks<br>• North American 56 kbps G.711 μ-law PCM over digital trunks<br>• North American analog voice transmission over analog trunks on TDM trunk groups on the TDM side of the MG | 5.3.2.12.12.6.5 | Y | Y | |
| 144 | The MG shall convert between North American 56 kbps G.711 μ-law PCM and ITU-T 64 kbps G.711 μ-law PCM in cases where North American 56 kbps TDM voice trunks are used on the TDM side of the MG. | 5.3.2.12.12.6.5 | Y | Y | |
| 145 | The MG shall convert between North American analog voice transmission and ITU-T 64 kbps G.711 μ-law PCM in cases where North American analog voice trunks are used on the TDM side of the MG. | 5.3.2.12.12.6.5 | Y | Y | |
| 146 | The MG shall support uncompressed, packetized VoIP streams using ITU-T Recommendation G.711 μ-law PCM and ITU-T Recommendation G.711 A-law PCM (ITU-T Recommendation G.711, November 1998, plus Appendix I, September 1999, and Appendix II, September 2000) over the IP network on the VoIP side of the MG. | 5.3.2.12.12.6.5.1 | Y | Y | |
| 147 | The MG shall packetize/depacketize G.711 media streams received or sent between its TDM side and its VoIP side. | 5.3.2.12.12.6.5.1 | Y | Y | |
| 148 | The MG shall transport each packetized G.711 VoIP stream to and from the destination local PEI, local AEI, local MG, remote PEI (via an EBC), remote AEI (via an EBC), or remote MG (via an EBC) using SRTP, UDP, and IP protocol layers on the VoIP side of the MG. | 5.3.2.12.12.6.5.1 | Y | Y | |
| 149 | The MG shall support the use of uncompressed, packetized G.711 μ-law and A-law VoIP media streams for both Fixed and Deployable applications. | 5.3.2.12.12.6.5.1 | Y | Y | |
| 150 | The MG shall provide an EC capability with an echo path capacity (echo tail length) of at least 64 ms. | 5.3.2.12.13.2.2 | Y | Y | |
| 151 | The MG shall provide echo cancellation for voice, G3 Fax, and VBD modem fax calls. | 5.3.2.12.13.2.2 | Y | Y | |
| 152 | Each MG EC shall be equipped with an “echo canceller disabling signal” tone detector. This tone detector shall detect and respond to an in-band EC disabling signal from an end user’s G3 Fax or VBD modem device. The EC disabling signal detected shall consist of a 2100-Hz tone with periodic phase reversals inserted in that tone. | 5.3.2.12.13.2.2 | Y | Y | |

## Table 3-1. Unified Capabilities Products Capability/Functional Requirements Table (continued)

| ID | Requirement | UCR Ref (UCR 2008 CH1) | MFSS | LSC | WAN SS |
|---|---|---|---|---|---|
| 153 | The MG tone detector/EC disabler shall detect the "echo canceller disabling signal" and disable the MG EC when, and only when, that signal is present for G3 Fax or VBD modem. | 5.3.2.12.13.2.2 | Y | Y | |
| 154 | The MG shall derive its clock timing from a designated T1 or PRI interface. | 5.3.2.12.14 | Y | Y | |
| 155 | The MGC within the CCA shall be responsible for controlling all the MGs within the LSC or MFSS. | 5.3.2.12.15 | Y | Y | |
| 156 | The MGC within the CCA shall be responsible for controlling all the trunks (i.e., DoD CCS7, PRI, or CAS) within each MG within the LSC or MFSS. | 5.3.2.12.15 | Y | Y | |
| 157 | The MGC within the CCA shall be responsible for controlling all media streams on each trunk within each MG. | 5.3.2.12.15 | Y | Y | |
| 158 | The MGC within the CCA shall accept IP signaling streams from an MG, conveying received PRI or CAS trunk signaling. The MGC shall return IP signaling streams to the MG accordingly, for conversion to transmitted PRI or CAS trunk signaling. | 5.3.2.12.15 | Y | Y | |
| 159 | Within the appliance (i.e., LSC or MFSS), the MGC shall use either ITU-T Recommendation H.248 (Gateway Control Protocol Version 3) or a supplier-proprietary protocol to accomplish the MG, trunk, and media stream controls described previously. | 5.3.2.12.15 | Y | Y | |
| 160 | Whenever the MG uses ITU-T Recommendation V.150.1, the following applies: ITU-T Recommendation V.150.1 provides for three states: audio, VBD, and modem relay. After call setup, inband signaling may be used to transition from one state to another. In addition, V.150.1 provides for the transition to FoIP using Fax Relay per ITU-T Recommendation T.38. | 5.3.2.12.16 | Y | Y | |
| 161 | The LSC MG, MFSS MG, and WAN SS MG shall not allow AS-SIP sessions that have reached the ringing state (i.e., an AS-SIP 180 (Ringing) message or 183 (Session Progress) has been sent from the called party to the calling party, and the calling party is receiving an audible ringing tone) to fail when an internal failure occurs within that MG. | 5.3.2.12.17 | Y | Y | |
| 162 | The precedence level and dialed number input to the PEI or AEI shall be as specified in UCR 2008, Section 5.2.3.5.1.2, Interswitch and Intraswitch Dialing. | 5.3.2.16 | Y | Y | |
| 163 | The DSN Worldwide Numbering and Dialing Plan will be used as the addressing schema within the current DSN and its migration into the SIP environment. | 5.3.2.16.1 | Y | Y | |
| 164 | The CCA shall allow session requests from LSC, MFSS EIs, other appliances, and MFSS MGs to contain<br>• Called addresses including DSN numbers from the DSN numbering plan<br>• Called addresses including E.164 numbers from the E.164 numbering plan | 5.3.2.16.1 | Y | Y | |
| 165 | When a session request's called address includes a DSN number from the DSN numbering plan, the CCA shall determine whether the called DSN number is local to the LSC or MFSS, or external to the LSC or MFSS. | 5.3.2.16.1 | Y | Y | |
| 166 | When a session request's called address includes an E.164 number from the E.164 numbering plan, the CCA shall determine whether the called E.164 number is local to the LSC or MFSS, or external to the LSC or MFSS. | 5.3.2.16.1 | Y | Y | |
| 167 | The CCA shall allow each VoIP and Video PEI and AEI served by an LSC or MFSS to have both a DSN number assigned and an E.164 number assigned. | 5.3.2.16.1.1 | Y | Y | |
| 168 | For VoIP and Video PEIs or AEIs that have both a DSN number and an E.164 number assigned, the CCA shall be able to match each PEI's or AEI's DSN number with its E.164 number, and to match each PEI's or AEI's E.164 number with its DSN number. | 5.3.2.16.1.1 | Y | Y | |
| 169 | The CCA shall be able to distinguish DSN called numbers from E.164 called numbers when processing VoIP and Video session requests from PEIs, AEIs, EBCs, MG line cards, and MG trunk groups. | 5.3.2.16.1.2 | Y | Y | |
| 170 | The CCA shall be able to distinguish local [DSN or E.164] called numbers from external [DSN or E.164] called numbers when processing VoIP and Video session requests from PEIs, AEIs, EBCs, MG line cards, and MG trunk groups. | 5.3.2.16.1.2 | Y | Y | |
| 171 | The MFSS or LSC is only required to support one network FQDN for use with SIP URI domain names: "uc.mil" if that appliance is used for SBU traffic, and "cuc.mil" if that appliance is used for classified traffic. | 5.3.2.16.1.4.1 | Y | Y | |
| 172 | The MFSS or LSC is required to ensure that all AS-SIP session requests entering or leaving that appliance use the network FQDN of that appliance (i.e., "uc.mil" for SBU traffic, or "cuc.mil" for Classified traffic) as the domain name in called SIP URIs. | 5.3.2.16.1.4.1 | Y | Y | |
| 173 | All voice systems, TDM or IP technology-based, must contain subscriber assignment information. | 5.3.2.16.1.5 | Y | Y | |

## Table 3-1. Unified Capabilities Products Capability/Functional Requirements Table (continued)

| ID | Requirement | UCR Ref (UCR 2008 CH1) | MFSS | LSC | WAN SS |
|---|---|---|---|---|---|
| 174 | Use of the Commercial Cost Avoidance functionality shall be an optional application that can be configured (i.e., enabled and disabled) on each RTS LSC. | 5.3.2.23 | | Y | |
| 175 | The LSC shall be able to query the DISN RTS Routing Database on "99 dialed PSTN number" call requests from LSC end users. When the database responds to this query with a DSN number that matches the dialed PSTN number, the LSC shall route the call request over the appropriate IP (AS-SIP) or TDM (e.g., T1.619A PRI) path, using the DSN number returned by the database. When the database responds with a "number not found" indication, the LSC shall route the call request to the local TDM PSTN trunk group (PRI or CAS) on the LSC's MG, using the originally dialed commercial number. | 5.3.2.23 | | Y | |
| 176 | The query-response interface between the LSC and the RTS Routing Database shall be LDAP Version 3 (v3) over TLS over IP. This LDAPv3 interface shall be compliant with RFC 4510. | 5.3.2.23 | | Y | |
| 177 | The encoding of the LDAPv3 messages and data schema used on the DB query interface between the LSC and the RTS Routing Database shall follow the BER of ASN.1, consistent with Section 5.1, Protocol Encoding, of RFC 4511. | 5.3.2.23 | | Y | |
| 178 | The DB query interface between the LSC and the RTS Routing Database shall traverse the data firewalls (and not the RTS EBC firewalls) at both the LSC and RTS Routing Database sites. | 5.3.2.23 | | Y | |
| 179 | After transmitting a Commercial Cost Avoidance query to the Database, the LSC shall start a "Commercial Cost Avoidance Query Response" timer awaiting a Database response. If the timer expires and no response is received, the LSC shall route the call request to the local TDM PSTN trunk group (PRI or CAS) using the originally dialed commercial number. | 5.3.2.23 | | Y | |
| 180 | On Commercial Cost Avoidance call requests that are re-routed to DSN numbers by the database, the LSC shall respond to MFSS or WAN SS AS-SIP signaling indicating that the call was rejected (i.e., an AS-SIP 4xx, 5xx, or 6xx response to an AS-SIP INVITE message), by overflowing these calls from the AS-SIP trunk group to the local TDM PSTN trunk group (PRI or CAS) using the originally dialed commercial number. | 5.3.2.23 | | Y | |
| 181 | On Commercial Cost Avoidance call requests that are re-routed to DSN numbers by the database, the MFSS or WAN SS shall accept AS-SIP call requests from the LSC where the DSN number is identified as the called number. The MFSS or WAN SS shall also be capable of returning AS-SIP signaling to the calling LSC that indicates "404 Not Found," "480 Temporarily Unavailable," or "500 Server Internal Error." The MFSS or WAN SS shall be capable of generating this AS-SIP signaling on its own, and shall be capable of relaying that AS-SIP signaling when it is received from a remote MFSS, remote WAN SS, or remote LSC. | 5.3.2.23 | Y | | Y |
| 182 | For each RTS end user served by an LSC, the LSC shall be able to upload that user's DSN phone number, PSTN phone number, and a unique LSC CCA-ID, Primary MFSS/WAN SS CCA-ID, and Backup MFSS/WAN SS CCA-ID to the RTS Routing Database. | 5.3.2.23 | | Y | |
| 183 | The AS-SIP signaling appliance shall divert ALL unanswered RTS VoIP calls above the ROUTINE precedence level to a designated RTS DN for PCD (e.g., the number of an attendant console or group of attendant consoles). | 5.3.2.25 | Y | Y | C |
| 184 | Unanswered RTS VoIP calls above the ROUTINE precedence level shall not be forwarded to voicemail, and shall not be forwarded to ACD systems. Instead, they should divert to the PCD DN when the PCD time period expires. | 5.3.2.25 | Y | Y | C |
| 185 | Unanswered RTS VoIP calls at the ROUTINE precedence level shall still be forwarded to voicemail or to ACD systems (when Call Forwarding Don't Answer is assigned to the called RTS DN), even though PCD is enabled and configured for the AS-SIP signaling appliance. | 5.3.2.25 | Y | Y | C |
| 186 | Calls above the ROUTINE precedence level that are destined to (directly dialed to) DNs assigned to voicemail or ACD systems shall only divert to the PCD DN as specified above (i.e., when they are unanswered at the voicemail or ACD system, and the PCD time period expires). | 5.3.2.25 | Y | Y | C |
| 187 | ROUTINE precedence level calls that are destined to (directly dialed to) DNs assigned to voicemail or ACD systems shall be allowed. | 5.3.2.25 | Y | Y | C |
| 188 | Incoming precedence calls to the attendant's listed DN, and incoming calls that are diverted to this attendant DN, shall be placed in a queue for the attendant console (or group of attendant consoles). | 5.3.2.25 | Y | Y | C |

## Table 3-1. Unified Capabilities Products Capability/Functional Requirements Table (continued)

| ID | Requirement | UCR Ref (UCR 2008 CH1) | MFSS | LSC | WAN SS |
|---|---|---|---|---|---|
| 189 | When a group of attendant consoles on the same LSC is used, and calls are either placed or diverted to the attendant console DN, call distribution across the Console Group shall be used to reduce excessive caller waiting times. | 5.3.2.25 | Y | Y | C |
| 190 | Incoming calls (placed and diverted) to the console DN shall be queued for attendant service by call precedence and time of arrival. The highest precedence call with the longest holding time in the queue shall be offered to an attendant first. | 5.3.2.25 | Y | Y | C |
| 191 | A recorded message of explanation (e.g., ATQA) shall be applied automatically to all the waiting calls in the Attendant Console queue (refer to Table 5.3.4-9, Announcements). | 5.3.2.25 | Y | Y | C |
| 192 | The RTS Attendant Console shall interoperate with PBAS/ASAC as described in<br>• Section 5.3.2.7.2.1, PBAS/ASAC Requirements<br>• Section 5.3.2.2.2.3, ASAC – Open Loop<br>• Section 5.3.4.10, Precedence and Preemption<br>The console shall be able to initiate all levels of RTS precedence calls (i.e., ROUTINE through FLASH-OVERRIDE). | 5.3.2.26.1 | Y | Y | C |
| 193 | The RTS Attendant Console shall provide a visual display of each precedence level and the calling number, for incoming direct dialed calls to the attendant, and diverted calls to the attendant (e.g., calls that reach the attendant through PCD). | 5.3.2.26.2 | Y | Y | C |
| 194 | The appliance and the attendant console shall give the attendant the ability to verify and override a busy line condition. | 5.3.2.26.4 | Y | Y | C |
| 195 | If the attendant uses BLV on a called line, and that called line (called EI) is busy, the appliance and the attendant console shall give an audible and visual “called line busy” indication back to the attendant. | 5.3.2.26.4 | Y | Y | C |
| 196 | The appliance and the attendant console shall prevent an attendant from activating BLV or Emergency Interrupt to called lines and called numbers that are located in the commercial network (the PSTN). | 5.3.2.26.4 | Y | Y | C |
| 197 | The appliance and the attendant console shall give the attendant the ability to use Emergency Interrupt to interrupt an existing call on a busy line, and inform the busy user of a new incoming call. | 5.3.2.26.4 | Y | Y | C |
| 198 | The appliance shall give selected destination EIs the ability to be exempt from Emergency Interrupt and attendant break-in. | 5.3.2.26.4 | Y | Y | C |
| 199 | The appliance and the attendant console shall have the ability to route all calls that are normally directed to the console to a separate night service deflection number. The night service deflection number shall be a fixed (preconfigured) or manually-selected DN. | 5.3.2.26.5 | Y | Y | C |
| 200 | When an attendant redirects an incoming call to a destination station, and that station is either busy or does not answer the call within a preset time, the appliance and the attendant console shall ensure that calling party on the redirected call is recalled automatically to the console. In this case, the appliance shall ensure that that the “recalled” call is returned to the console that originally processed the call. | 5.3.2.26.6 | Y | Y | C |
| 201 | The appliance and the attendant console shall have the ability to place calls (both directed to the attendant and diverted to the attendant) into a waiting queue. | 5.3.2.26.7 | Y | Y | C |
| 202 | The appliance and the attendant console shall ensure that calls in the attendant queue are not lost when a console is placed out of service or has its calls forwarded to a night service deflection number. | 5.3.2.26.7 | Y | Y | C |
| 203 | The LSCs that support SIP EIs MUST comply with the differentiated set of requirements defined for SIP EIs if they serve SIP EIs, and LSCs MUST comply with the differentiated set of requirements defined for H.323 and/or vendor-proprietary EIs if they serve H.323 and/or vendor-proprietary EIs. | 5.3.4.7.1 | | Y | |
| 204 | All AS-SIP signaling appliances MUST comply with the SIP syntax and encoding rules set forth in RFC 3261. [RFC 3261, Section 25, Augmented BNF for the SIP Protocol] | 5.3.4.7.1.1 | Y | Y | Y |
| 205 | When an AS-SIP signaling appliance does not understand a header field in a request (and support for the header field is not a mandatory requirement under this specification), the AS-SIP signaling appliance MUST ignore that header field and continue processing the message. The AS-SIP signaling appliances MUST ignore any malformed header fields that are not necessary for processing requests. | 5.3.4.7.1.3 | Y | Y | Y |

## Table 3-1. Unified Capabilities Products Capability/Functional Requirements Table (continued)

| ID | Requirement | UCR Ref (UCR 2008 CH1) | MFSS | LSC | WAN SS |
|---|---|---|---|---|---|
| 206 | When an AS-SIP signaling appliance that is implemented as a SIP proxy receives a SIP Request message, 2xx response, or 18x response, then the AS-SIP signaling appliance MUST add a Record-Route header whereby the userinfo part of the SIP URI is a unique identifier for the AS-SIP signaling appliance and an IP address is used for the host name. | 5.3.4.7.1.3c | Y | Y | Y |
| 207 | All AS-SIP signaling appliances MUST be call stateful. | 5.3.4.7.1.4 | Y | Y | Y |
| 208 | Upon receipt of a new request, AS-SIP signaling appliances MUST perform request validation, route information preprocessing, determine request targets, perform request forwarding, perform response processing, process timer C, handle transport error, handle CANCEL processing, and perform proxy route processing according to RFC 3261 | 5.3.4.7.1.5 | Y | Y | Y |
| 209 | All AS-SIP signaling appliances MUST support generation of the long form of the SIP header fields along with the receipt and processing of the long form of the SIP header fields. | 5.3.4.7.1.7 | Y | Y | Y |
| 210 | All AS-SIP signaling appliances MUST support receiving and processing the compact form of the SIP header fields. | 5.3.4.7.1.8 | Y | Y | Y |
| 211 | All AS-SIP signaling appliances serving IP EIs MUST support the offer/answer model for the Session Description Protocol (SDP). | 5.3.4.7.1.9 | Y | Y | Y |
| 212 | If an LSC receives a call request from a served IP EI and the LSC has been unable to establish a TLS connection with its EBC and is unable to do so upon receipt of the INVITE, then the AS-SIP signaling appliance MUST ensure that the IP EI plays the Isolated Code Announcement (ICA) and terminates the call request and MUST send an alarm to the NMS. | 5.3.4.7.1.10 | | Y | |
| 213 | When an SS receives an INVITE from either a served LSC or another SS where the Request-URI has a DSN telephone number for which the SS has no entry in its Location Server, then the SS MUST respond with a 404 (Not Found) response code. | 5.3.4.7.1.12 | Y | | Y |
| 214 | When an LSC receives an inbound INVITE from its primary (or secondary) SS whose Request-URI has a DSN telephone number for which the LSC has no entry in its Location Server, then the LSC MUST respond with a 404 (Not Found) response message. | 5.3.4.7.1.13 | | Y | |
| 215 | The LSCs serving IP EIs MUST ensure that all outbound INVITEs forwarded onto the UC WAN include a Supported header with the option tag “100rel.” | 5.3.4.7.1.14 | | Y | |
| 216 | When an AS-SIP signaling appliance receives an INVITE (having an sdp offer) and will be interworking the signaling to the TDM network, then the AS-SIP signaling appliance MUST return an sdp answer in the first non-failure reliable provisional response. | 5.3.4.7.1.15 | Y | Y | Y |
| 217 | When an LSC receives an INVITE (having an sdp offer) intended for a served IP EI, then the AS-SIP signaling appliance MUST NOT return an sdp answer in any provisional response and MUST only place the sdp answer in the 200 response. | 5.3.4.7.1.16 | | Y | |
| 218 | When an AS-SIP signaling appliance receives an Empty INVITE (i.e., an INVITE that does not include an sdp offer) and said AS-SIP signaling appliance will be interworking the signaling to the TDM network, then the AS-SIP signaling appliance MUST send an sdp offer in the first reliable non-failure provisional response (1xx response code greater than a 100 response code). | 5.3.4.7.1.17 | Y | Y | Y |
| 219 | When an AS-SIP signaling appliance receives an Empty INVITE intended for a served IP EI, then the AS-SIP signaling appliance MUST NOT send an sdp offer in any provisional response (1xx response code greater than a 100 response code) and MUST only send the sdp offer in the 200 response. | 5.3.4.7.1.18 | Y | Y | Y |
| 220 | When an AS-SIP signaling appliance that is interworking SIP signaling with the TDM network receives a 180 (Ringing) response from the IP network, the AS-SIP signaling appliance MUST ensure that the appropriate ring back tone (e.g., ring back, precedence ring back) is generated on the TDM network. | 5.3.4.7.1.19 | Y | Y | Y |
| 221 | Announcements are not sent in-band on the DSN TDM network; therefore, when an AS-SIP signaling appliance that is interworking SIP signaling with the TDM network receives a 480 (Temporarily Unavailable), 486 (Busy Here), or 488 (Not Acceptable Here) response from the IP network with either no Reason header or a Reason header that does NOT have a preemption cause, the AS-SIP signaling appliance does NOT generate an announcement to be sent to the TDM network, rather it sends either a REL with Q.850 cause code 46 precedence call blocked (in the case of SS7 ISUP) or a Disconnect (in the case of ISDN) with the appropriate cause code message to the TDM network. | 5.3.4.7.1.20 | Y | Y | Y |

## Table 3-1. Unified Capabilities Products Capability/Functional Requirements Table (continued)

| ID | Requirement | UCR Ref (UCR 2008 CH1) | MFSS | LSC | WAN SS |
|---|---|---|---|---|---|
| 222 | An LSC that receives an outbound call request from a served IP EI MAY include an audio media feature tag and a video media feature tag, as appropriate, in the Contact header field of the INVITE message. | 5.3.4.7.1.21 | | Y | |
| 223 | The AS-SIP signaling appliances are NOT required to process and act on the audio media tag and the video media tag in the Contact header but all intermediary AS-SIP signaling appliances MUST preserve the audio media tag (if present) and the video tag (if present) when forwarding the INVITE. (i.e., intermediary AS-SIP signaling appliances MUST NOT strip off or modify the media feature tags). | 5.3.4.7.1.22 | Y | Y | Y |
| 224 | When an LSC receives a call request from a served IP EI intended for a destination outside the enclave, then the AS-SIP signaling appliance MUST generate the P-Asserted-Identity header. | 5.3.4.7.1.23 | | Y | |
| 225 | The LSC serving the AS-SIP EI MUST support authentication of the AS-SIP EIs. The user of the AS-SIP EI is required to perform user authentication to the LSC when initiating precedence call requests. | 5.3.4.7.1.26 | | Y | |
| 226 | The LSCs serving IP EIs (other than AS-SIP EIs) MUST support authentication of the IP EIs. The user of the IP EI is required to perform user authentication to the LSC when initiating precedence call requests. | 5.3.4.7.1.31 | | Y | |
| 227 | When an LSC serving H.323 and/or proprietary EIs receives a request that contains a Require header field with one or more option tags that it does not understand, then it MUST return a 420 (Bad Extension) response code. The response MUST include an Unsupported header field listing those option tags the element did not understand. | 5.3.4.7.1.35 | | Y | |
| 228 | The LSCs and AS-SIP EIs MUST support the generating, receiving, and processing of SIP CANCEL requests. | 5.3.4.7.2.2 | | Y | |
| 229 | The AS-SIP signaling appliances MUST support the keep-alive mechanism for SIP sessions. | 5.3.4.8.1.1 | Y | Y | Y |
| 230 | The AS-SIP signaling appliances MUST support the generating, receiving, and processing of the Session-Expires and Min-SE header fields. | 5.3.4.8.1.3 | Y | Y | Y |
| 231 | The AS-SIP signaling appliances MUST support the 422 (Session Interval Too Small) response code. | 5.3.4.8.1.4 | Y | Y | Y |
| 232 | The AS-SIP signaling appliances MUST support the option tag “timer” for use with the Supported and Require header fields; however, an AS-SIP signaling appliance acting as a UAC or a SIP EI acting as a UAC MUST NOT place the option tag “timer” in either a Require header or a Proxy-Require header. | 5.3.4.8.1.4 | Y | Y | Y |
| 233 | When an AS-SIP signaling appliance receives an outbound request from a served H.323 or proprietary IP EI, then the AS-SIP signaling appliance MUST operate in accordance with the UAC behavior (when responsible for performing the refresh). | 5.3.4.8.1.8 | Y | Y | Y |
| 234 | When an AS-SIP signaling appliance receives a call request from another AS-SIP signaling appliance, and the destination is a served H.323 or proprietary IP EI, then the AS-SIP signaling appliance MUST operate in accordance with the UAS behavior (when responsible for performing the refresh). | 5.3.4.8.1.10 | Y | Y | Y |
| 235 | When SDP information is present in a SIP message, the SIP message MUST have a content-type header having the MIME Content-Type “application/sdp”. | 5.3.4.9.1.2 | Y | Y | Y |
| 236 | The SDP parser in the AS-SIP signaling appliance (and all AS-SIP EIs, including AS-SIP video conferencing EIs) MUST be able to accept and handle without error any of the SDP line types enumerated in RFC 2327 even if the application ignores the contents. | 5.3.4.9.1.3 | Y | Y | Y |
| 237 | The precedence level of the call request MUST be set forth in a SIP Resource-Priority header field whose syntax is in accordance with RFC 4412, as modified in UCR 2008, Section 5.3.4.10.2 | 5.3.4.10.2.1 | Y | Y | C |
| 238 | Video telephony EIs MUST, as the default configuration, require an end user wishing to place a call that includes video, to affirmatively signal the intention to include video to the EI every time the caller wishes to engage in a video telephony call. | 5.3.4.12.1.1 | Y | Y | C |
| 239 | Every time a caller requests a video telephony call and the video portion of the telephony call is successfully established, then the video telephony EI MUST provide the user with an affirmative confirmation that the video is enabled either before, or upon successful completion of, session establishment. | 5.3.4.12.1.2 | Y | Y | C |
| 240 | When an INVITE with an sdp offer that includes both audio and video capabilities is received by an LSC serving a destination EI that supports video telephony, then when the call request is received by the destination EI the destination EI MUST indicate to the callee that a telephony call requesting video connectivity has been received. | 5.3.4.12.2.1 | Y | Y | C |

## Table 3-1. Unified Capabilities Products Capability/Functional Requirements Table (continued)

| ID | Requirement | UCR Ref (UCR 2008 CH1) | MFSS | LSC | WAN SS |
|---|---|---|---|---|---|
| 241 | Every time a callee accepts a video telephony call and the video portion of the telephony call is successfully established, then the video telephony EI MUST provide the user with an affirmative confirmation that the video is enabled either before or upon successful session establishment. | 5.3.4.12.2.3 | Y | Y | C |
| 242 | AS-SIP Signaling appliances must follow call flows depicted in section 5.3.4.13 for all call features and calling services. | 5.3.4.13 | Y | Y | Y |
| 243 | AS-SIP Signaling appliances must follow requirements depicted in section 5.3.4.14 for all IP to TDM and TDM to IP translations. | 5.3.4.14 | Y | Y | Y |
| 244 | When an interworking AS-SIP signaling appliance receives a request that contains a Require header field with one or more option-tags that it does not understand, then the interworking AS-SIP signaling appliance MUST return a 420 (Bad Extension) response. The response MUST include an Unsupported header field listing those option-tags the element did not understand. | 5.3.4.16.1.1 | Y | Y | Y |
| 245 | All outbound INVITEs generated by an interworking AS-SIP signaling appliance MUST include a Supported header with the option tag “100rel.” | 5.3.4.16.1.2 | Y | Y | Y |
| 246 | Interworking AS-SIP signaling appliances MUST support generating and receiving SIP INVITE requests. Interworking AS-SIP signaling appliances MUST support generating and receiving SIP re-INVITES. | 5.3.4.16.2.1 | Y | Y | Y |
| 247 | Interworking AS-SIP signaling appliances MUST support generating and receiving SIP CANCEL requests. | 5.3.4.16.2.2 | Y | Y | Y |
| 248 | Interworking AS-SIP signaling appliances MUST support generating and receiving SIP OPTIONS requests. | 5.3.4.16.2.4 | Y | Y | Y |
| 249 | Interworking AS-SIP signaling appliances MUST support generating and receiving SIP BYE requests | 5.3.4.16.2.5 | Y | Y | Y |
| 250 | Interworking AS-SIP signaling appliances MUST support generating and receiving SIP ACK requests | 5.3.4.16.2.6 | Y | Y | Y |
| 251 | Interworking AS-SIP signaling appliances MUST support generating and receiving the SIP PRACK method. Interworking AS-SIP signaling appliances MUST support use of the option tag “100rel” with the Require header and Supported header, and MUST support the use of header fields RAck and RSeq. | 5.3.4.16.2.8 | Y | Y | Y |
| 252 | Interworking AS-SIP signaling appliances MUST support generating and receiving the SIP UPDATE method | 5.3.4.16.2.9 | Y | Y | Y |
| 253 | Inter-working AS-SIP signaling appliances MUST be capable of receiving/processing REFER requests, the Refer-To header, and the REFER event package. | 5.3.4.16.2.10 | Y | Y | Y |
| 254 | Interworking AS-SIP signaling appliances MUST support the NOTIFY method for event notification. | 5.3.4.16.2.12 | Y | Y | Y |
| 255 | Interworking AS-SIP signaling appliances MUST, in adherence with the enumerated RFCs, be capable of generating, receiving, and processing the SIP headers listed in UCR 2008 Section 5.3.4.16.3.1 | 5.3.4.16.3.1 | Y | Y | Y |
| 256 | The From header MUST include a tag field as specified in RFC 3261, Section 19.3. | 5.3.4.16.3.3 | Y | Y | Y |
| 257 | The To header of a request that is part of a dialog MUST include a tag field as specified in RFC 3261, Section 19.3. | 5.3.4.16.3.4 | Y | Y | Y |
| 258 | Interworking AS-SIP signaling appliances MUST support the use of option tags for the Require, Supported, and Unsupported headers. | 5.3.4.16.3.5 | Y | Y | Y |
| 259 | When the interworking LSC sends an initial AS-SIP INVITE to its local EBC intended for its SS, the interworking LSC MUST add two Route header field values, which either takes the form of a route set comprising two Route headers where the first Route header is the sip uri for the EBC at the enclave and the second Route header is the sip uri for the EBC serving the SS, or takes the form of one Route header with two comma-separated field values. | 5.3.4.16.3.6 | | Y | |
| 260 | When an interworking SS forwards an initial AS-SIP INVITE to a peer SS, then the interworking SS MUST add a route set comprising two Route headers where the first Route header is the SIP URI for the EBC that serves the interworking SS, and the second Route header is the SIP URI for the EBC serving the peer SS. | 5.3.4.16.3.7 | Y | | Y |
| 261 | When an interworking AS-SIP signaling appliance generates an outbound AS-SIP request, the interworking AS-SIP signaling appliance MUST add its own VIA header to the AS-SIP request. | 5.3.4.16.3.8 | Y | Y | Y |
| 262 | When an interworking AS-SIP signaling appliance receives a SIP response to be translated into TDM signaling, then the interworking AS-SIP signaling appliance operates as the UAC for SIP purposes. | 5.3.4.16.3.9 | Y | Y | Y |

## Table 3-1. Unified Capabilities Products Capability/Functional Requirements Table (continued)

| ID | Requirement | UCR Ref (UCR 2008 CH1) | MFSS | LSC | WAN SS |
|---|---|---|---|---|---|
| 263 | When an interworking AS-SIP signaling appliance receives an inbound SIP request to be translated into TDM signaling, then the AS-SIP signaling appliance operates as the UAS for SIP purposes. | 5.3.4.16.3.10 | Y | Y | Y |
| 264 | When an interworking AS-SIP signaling appliance generates a SIP response on behalf of a signaling message received from the TDM network, then before forwarding the SIP response the interworking AS-SIP signaling appliance MUST include the VIA headers received in the corresponding SIP request. | 5.3.4.16.3.11 | Y | Y | Y |
| 265 | When an interworking AS-SIP signaling appliance operating as an originating gateway receives an IAM from the TDM network and sends an INVITE to another AS-SIP signaling appliance (SS or LSC), then the interworking AS-SIP signaling appliance MUST add a CCA-ID parameter to the SIP URI of the Contact header populated with its unique identifier before forwarding the INVITE onward to the next AS-SIP signaling appliance. | 5.3.4.16.3.12 | Y | Y | Y |
| 266 | Interworking AS-SIP signaling appliances MUST support generating, receiving, and processing the provisional (1xx) response codes: 100 (Trying), 180 (Ringing), and 183 (Session Progress). | 5.3.4.16.4.1 | Y | Y | Y |
| 267 | Interworking AS-SIP signaling appliances MUST support generating and receiving/processing the successful (2xx) response codes: 200 (OK) [RFC 3261, Section 21.2, 200 OK] and 202 (Accepted) | 5.3.4.16.4.2 | Y | Y | Y |
| 268 | Interworking AS-SIP signaling appliances MUST support generating and receiving/processing the request failure (4xx) response codes: 400 (Bad Request), 401 (Unauthorized), 403 (Forbidden), 404 (Not Found), 405 (Method Not Allowed), 406 (Not Acceptable), 407 (Proxy Authentication Required), 408 (Request Timeout), 410 (Gone), 413 (Request Entity Too Large), 414 (Request-URI Too Long), 415 (Unsupported Media Type), 416 (Unsupported URI Scheme), 417 (Unknown Resource-Priority), 420 (Bad Extension), 421 (Extension Required), 422 (Session Interval Too Small), 423 (Interval Too Brief), 480 (Temporarily Unavailable), 481 (Call/Transaction Does Not Exist), 482 (Loop Detected), 483 (Too Many Hops), 484 (Address Incomplete), 485 (Ambiguous), 486 (Busy Here), 487 (Request Terminated), 488 (Not Acceptable Here), and 491 (Request Pending). | 5.3.4.16.4.4 | Y | Y | Y |
| 269 | Interworking AS-SIP signaling appliances upon properly receiving a CANCEL request for an INVITE MUST first send a 200 (OK) response code to the CANCEL, and then follow up with a 487 (Request Terminated) response code to the INVITE. | 5.3.4.16.4.5 | Y | Y | Y |
| 270 | Interworking AS-SIP signaling appliances MUST support generating and receiving/processing the server failure (5xx) response codes: 500 (Server Internal Error), 501 (Not Implemented), 502 (Bad Gateway), 503 (Service Unavailable), 504 (Server Timeout), 505 (Version Not Supported), 513 (Message Too Large) [RFC 3261, Section 21.5, Server Failure 5xx], and 580 (Precondition Failure) | 5.3.4.16.4.6 | Y | Y | Y |
| 271 | Interworking AS-SIP signaling appliances MUST support generating and receiving/processing the global failures (6xx) response codes: 600 (Busy Everywhere), 603 (Decline), 604 (Does Not Exist Anywhere), and 606 (Not Acceptable). | 5.3.4.16.4.7 | Y | Y | Y |
| 272 | When an interworking AS-SIP signaling appliance receives an outbound request from the PSTN (i.e., the interworking AS-SIP signaling appliance is operating as an originating gateway) and the destination is NOT an IP EI directly served by the interworking AS-SIP signaling appliance, then the interworking AS-SIP signaling appliance MUST operate in accordance with the UAC behavior set forth in RFC 4028. | 5.3.4.17.1.1 | Y | Y | Y |
| 273 | When an interworking AS-SIP signaling appliance acting as a terminating gateway receives a call request from another AS-SIP signaling appliance, then the interworking AS-SIP signaling appliance MUST operate in accordance with the UAS behavior set forth in RFC 4028. | 5.3.4.17.1.3 | Y | Y | Y |
| 274 | Interworking AS-SIP signaling appliances MUST support the option tag “resource-priority” for use with the Require header. | 5.3.4.18.3.1 | Y | Y | Y |
| 275 | The interworking AS-SIP signaling appliance MUST receive and accept a Require header field with the option tag “resource-priority” in the INVITE, UPDATE, and REFER messages. Interworking AS-SIP signaling appliances MUST NOT reject the message with a 420 (Bad Extension) response code, but rather it MUST accept the request and translate it into the appropriate TDM signaling message as required. | 5.3.4.18.3.2 | Y | Y | Y |

## Table 3-1. Unified Capabilities Products Capability/Functional Requirements Table (continued)

| ID | Requirement | UCR Ref (UCR 2008 CH1) | MFSS | LSC | WAN SS |
|---|---|---|---|---|---|
| 276 | If an interworking AS-SIP signaling appliance receives an inbound ROUTINE call request over the IP network for a destination on the TDM network and the interworking AS-SIP signaling appliance has insufficient bandwidth-related resources (e.g., lack of circuit-switched trunk capacity for bearer traffic) to handle the call request, the interworking AS-SIP signaling appliance MUST reply with a 488 (Not Acceptable Here) response code and SHOULD include a Warning header with warning code 370 (Insufficient Bandwidth). | 5.3.4.18.4.5 | Y | Y | Y |
| 277 | If an interworking AS-SIP signaling appliance receives an inbound precedence call request (i.e., with precedence level PRIORITY or above) over the IP network for a destination on the TDM network and the interworking AS-SIP signaling appliance has insufficient bandwidth-related resources (e.g., lack of circuit-switched trunk capacity for bearer traffic) to handle the call request, and if there are insufficient existing calls (and/or call requests) of lower precedence whose removal would provide the necessary resources to support the pending call request, then:<br>- The interworking AS-SIP signaling appliance MUST reply with a 488 (Not Acceptable Here) response code and SHOULD include a Warning header with warning code 370 (Insufficient Bandwidth), and<br>- The AS-SIP signaling appliance serving the calling IP EI MUST arrange for a BPA to be played to the calling IP EI before terminating the call. | 5.3.4.18.4.6 | Y | Y | Y |
| 278 | When an interworking AS-SIP signaling appliance receives a precedence call request from the IP network that it translates and forwards onto the TDM network and the response from the TDM network is a REL with Q.850 cause code 46 precedence call blocked (in the case of SS7 ISUP) or a Disconnect with Q.850 cause code 46 precedence call blocked (in the case of ISDN), then the interworking AS-SIP signaling appliance MUST generate a 488 (Not Acceptable Here) response that SHOULD include a “Warning” header with warning code 370 (Insufficient Bandwidth) with no Reason header that it sends onto the IP network. | 5.3.4.18.6.2 | Y | Y | Y |
| 279 | Interworking AS-SIP signaling appliances directly serving IP EIs MUST comply with the requirements in UCR 2008, Section 5.3.4.10.3.3.2, Implementing the Network Preemption. In addition, interworking AS-SIP signaling appliances directly serving IP EIs MUST meet the enumerated requirements in section 5.3.4.18.6.3.2. | 5.3.4.18.6.3 | Y | Y | Y |
| 280 | AS-SIP signaling appliances must follow all call flows depicted in UCR 2008 Section 5.3.4.19 for all supplementary services. | 5.3.4.19 | Y | Y | Y |
| 281 | The product shall support dual IPv4 and IPv6 stacks as described in RFC 4213. | 5.3.5.4 | Y | | Y |
| 282 | Dual stack end points or Call Control Agents shall be configured to choose IPv4 over IPv6. | 5.3.5.4 | Y | | Y |
| 283 | All nodes that are “IPv6-capable” shall be carefully configured and verified that the IPv6 stack is disabled until it is deliberately enabled as part of a risk management strategy. | 5.3.5.4 | Y | | Y |
| 284 | The product shall support the IPv6 format as described in RFC 2460 and updated by RFC 5095. | 5.3.5.4 | Y | | Y |
| 285 | The product shall support the transmission of IPv6 packets over Ethernet networks using the frame format defined in RFC 2464. | 5.3.5.4 | Y | | Y |
| 286 | The product shall support a minimum MTU of 1280 bytes. | 5.3.5.4.1 | Y | | Y |
| 287 | The product shall not use the Flow Label field as described in RFC 2460. The product shall be capable of setting the Flow Label field to zero when originating a packet. The product shall not modify the Flow Label field when forwarding packets. The product shall be capable of ignoring the Flow Label field when receiving packets. | 5.3.5.4.2 | Y | | Y |
| 288 | The product shall support the IPv6 Addressing Architecture as described in RFC 4291. | 5.3.5.4.3 | Y | | Y |
| 289 | The product shall support the IPv6 Scoped Address Architecture as described in RFC 4007. | 5.3.5.4.3 | Y | | Y |
| 290 | The product shall support Neighbor Discovery for IPv6 as described in RFC 2461 and RFC 4861. | 5.3.5.4.5 | Y | | Y |
| 291 | The product shall not set the override flag bit in the Neighbor Advertisement message for solicited advertisements for anycast addresses or solicited proxy advertisements. | 5.3.5.4.5 | Y | | Y |
| 292 | When a valid “Neighbor Advertisement” message is received by the product and the product neighbor cache does not contain the target’s entry, the advertisement shall be silently discarded. | 5.3.5.4.5 | Y | | Y |

## Table 3-1. Unified Capabilities Products Capability/Functional Requirements Table (continued)

| ID | Requirement | UCR Ref (UCR 2008 CH1) | MFSS | LSC | WAN SS |
|---|---|---|---|---|---|
| 293 | When a valid "Neighbor Advertisement" message is received by the product and the product neighbor cache entry is in the INCOMPLETE state when the advertisement is received and the link layer has addresses and no target link-layer option is included, the product shall silently discard the received advertisement. | 5.3.5.4.5 | Y | | Y |
| 294 | When address resolution fails on a neighboring address, the entry shall be deleted from the product's neighbor cache. | 5.3.5.4.5 | Y | | Y |
| 295 | The product shall support the ability to configure the product to ignore Redirect messages. The product shall only accept Redirect messages from the same router as is currently being used for that destination. | 5.3.5.4.5.1 | Y | | Y |
| 296 | If the product supports routing functions, the product shall inspect valid router advertisements sent by other routers and verify that the routers are advertising consistent information on a link and shall log any inconsistent router advertisements. The product shall prefer routers that are reachable over routers whose reachability is suspect or unknown. | 5.3.5.4.5.2 | Y | | Y |
| 297 | The product shall support manual assignment of IPv6 addresses. | 5.3.5.4.6 | Y | | Y |
| 298 | The product shall support the ICMPv6 as described in RFC 4443. The product shall have a configurable rate limiting parameter for rate limiting the forwarding of ICMP messages. | 5.3.5.4.7 | Y | | Y |
| 299 | The product shall support the capability to enable or disable the ability of the product to generate a Destination Unreachable message in response to a packet that cannot be delivered to its destination for reasons other than congestion. | 5.3.5.4.7 | Y | | Y |
| 300 | The product shall support the enabling or disabling of the ability to send an Echo Reply message in response to an Echo Request message sent to an IPv6 multicast or anycast address. | 5.3.5.4.7 | Y | | Y |
| 301 | The product shall validate ICMPv6 messages, using the information contained in the payload, before acting on them. | 5.3.5.4.7 | Y | | Y |
| 302 | The product shall support MLD as described in RFC 2710. | 5.3.5.4.8 | Y | | Y |
| 303 | For traffic engineering purposes, the bandwidth required per voice subscriber is calculated to be 110.0 kbps (each direction) for each IPv6 call. | 5.3.5.4.11 | Y | | Y |
| 304 | The product shall forward packets using the same IP Version as the Version in the received packet. | 5.3.5.4.12 | Y | | Y |
| 305 | The product shall use the Alternative Network Address Types (ANAT) semantics for the Session Description Protocol (SDP) in accordance with RFC 4091 when establishing media streams from dual-stacked appliances for AS-SIP signaled sessions. | 5.3.5.4.12 | Y | | Y |
| 306 | The product shall prefer any IPv4 address to any IPv6 address when using ANAT semantics. | 5.3.5.4.12 | Y | | Y |
| 307 | The product shall place the option tag "SDP-ANAT" in a Required header field when using ANAT semantics in accordance with RFC 4092. | 5.3.5.4.12 | Y | | Y |
| 308 | The products shall support Differentiated Services as described in RFC 2474 for a voice and video stream in accordance with Section 5.3.2, Assured Services Requirements, and Section 5.3.3, Network Infrastructure E2E Performance Requirements, plain text DSCP plan. | 5.3.5.4.14 | Y | | Y |
| 309 | The LSC must meet all requirements for FCAPS Management and audit logs as listed in UCR 2008 section 5.3.2.7.2.6 | 5.3.2.7.2.6 | | Y | |
| 310 | The physical interface between the DISA VVoIP EMS and the network components (i.e., LSC, MFSS, EBC, CE Router) is a 10/100-Mbps Ethernet interface. The interface will work in either of the two following modes using auto-negotiation: IEEE, Ethernet Standard 802.3, 1993; or IEEE, Fast Ethernet Standard 802.3u, 1995. | 5.3.2.4.4 | Y | Y | Y |
| 311 | Redundant physical Ethernet interfaces are required for signaling and bearer traffic. If the primary signaling and bearer Ethernet interface fails, then traffic shall be switched to the backup signaling and bearer Ethernet interface. | 5.3.2.4.4 | Y | Y | Y |
| 312 | The MFSS shall provide a single, common interface to the DISA NMS. The single interface shall provide access to MFSS features and functions for both the TDM and SS side of the MFSS. | 5.3.2.8.3.1 | Y | | |
| 313 | The MFSS-to-NMS interface shall be an Ethernet connection as specified in Section 5.3.2.4.4, VVoIP NMS Interface Requirements. | 5.3.2.8.3.1 | Y | | |

## Table 3-1. Unified Capabilities Products Capability/Functional Requirements Table (continued)

| ID | Requirement | UCR Ref (UCR 2008 CH1) | MFSS | LSC | WAN SS |
|---|---|---|---|---|---|
| 314 | As specified in Section 5.3.2.4.4, VoIP NMS Interface Requirements, the MFSS, WAN SS, and LSC components shall support at least one pair of physical Ethernet management interfaces at the component level (not at the device level). One of these Ethernet management interfaces shall be used for component-level communication with a Local EMS. The other Ethernet management interface shall be used for component-level communication with the remote VVoIP EMS. | 5.3.2.17.2 | Y | Y | Y |
| 315 | A network appliance shall have Operations interfaces that provide a standard means by which management systems can directly or indirectly communicate with and, thus, manage the various network appliances in the DISN. | 5.3.2.17.2 | Y | Y | Y |
| 316 | There shall be a local craftsperson interface (Craft Input Device (CID)) for OA&M for all VVoIP network components. | 5.3.2.17.2 | Y | Y | Y |
| 317 | The network appliances shall provide NM data to the external VVoIP EMS. | 5.3.2.17.2 | Y | Y | Y |
| 318 | A network appliance shall communicate with an external Voice and Video management system by a well-defined, standards-based management interface using an industry-accepted management protocol. | 5.3.2.17.2 | Y | Y | Y |
| 319 | Communications between VVoIP EMS and the VVoIP network appliances shall be via IP. | 5.3.2.17.2 | Y | Y | Y |
| 320 | A network appliance shall issue state change notifications for changes in the states of replaceable components, including changes in operational state or service status, and detection of new components. | 5.3.2.17.2 | Y | Y | Y |
| 321 | A network appliance shall be provisioned by the VVoIP EMS with the address, software, and OSI Layer 4 port information associated with its Core Network interfaces. | 5.3.2.17.2 | Y | Y | Y |
| 322 | A network appliance shall be capable of maintaining and responding to VVoIP EMS requests for resource inventory, configuration, and status information concerning Core Network interface resources (e.g., IP or MAC addresses) that have been installed and placed into service. | 5.3.2.17.2 | Y | Y | Y |
| 323 | Network appliances that provide voice and video call service shall have the capability to invoke traffic flow (NM) controls as detailed in Section 5.3.2.18, Network Management Requirements of Appliance Functions. | 5.3.2.17.2 | Y | Y | Y |
| 324 | A network appliance shall be capable of setting the Administrative state and maintaining the Operational state of each Core Network interface, and maintaining the time of the last state change. | 5.3.2.17.2 | Y | Y | Y |
| 325 | Alarm messages must be distinguishable from administrative log messages. | 5.3.2.17.3.1.1 | Y | Y | Y |
| 326 | The NEs shall detect their own fault (alarm) conditions. | 5.3.2.17.3.1.2 | Y | Y | Y |
| 327 | The NEs shall generate alarm notifications. | 5.3.2.17.3.1.3 | Y | Y | Y |
| 328 | The network elements shall send the alarm messages in NRT. More than 99.95 percent of alarms shall be detected and reported in NRT. Near Real Time is defined as event detection and alarm reporting within 5 seconds of the event, excluding transport time. | 5.3.2.17.3.1.4 | Y | Y | Y |
| 329 | The network components shall send alarm messages in SNMPv3 format. | 5.3.2.17.3.1.5 | Y | Y | Y |
| 330 | Capability to access and modify configuration data by the VVoIP EMS shall be controllable by using an access privileges function within the network appliance. | 5.3.2.17.3.2.1 | Y | Y | Y |
| 331 | The VVoIP NEs shall be able to receive and respond to remote NM commands. | 5.3.2.17.3.4.2 | Y | Y | Y |
| 332 | When ASAC budgets are reduced, by NM action, below the current budget allocation, any previous sessions (regardless of precedence level) in excess of the new budget shall be allowed to terminate naturally. This assumes that the CE Router queue bandwidths would not be reduced until the LSC session count fell below or equal to the newly commanded reduced budget, to prevent the corruption of existing sessions. | 5.3.2.17.3.4.2.2 | Y | Y | Y |
| 333 | The LSC, MFSS, and WAN SS shall have the capability of setting the percentage of calls to be blocked to the designated destination(s). | 5.3.2.17.3.4.2.7 | Y | Y | Y |
| 334 | FLASH and FLASH-OVERRIDE calls shall not be affected by NM controls. | 5.3.2.17.3.4.2.7 | Y | Y | Y |
| 335 | Within IP, directionalization is controlled by designating all or part of the call budget as inbound (i.e., local destination) and/or outbound (i.e., local origination). The default is no designation (i.e., calls up to the total budget can be inbound or outbound in any combination). It does not change the total budget, only the sourcing direction of the budget; therefore, there is no impact to the router queue bandwidths. | 5.3.2.17.3.4.2.10 | Y | Y | Y |

## Table 3-1. Unified Capabilities Products Capability/Functional Requirements Table (continued)

| ID | Requirement | UCR Ref (UCR 2008 CH1) | MFSS | LSC | WAN SS |
|---|---|---|---|---|---|
| 336 | Within IP, the routing of all traffic (i.e., VVoIP and non-VVoIP) is handled via MPLS in the DISN core. The MPLS automatically finds the most effective route for the traffic. | 5.3.2.17.3.4.2.11 | Y | Y | Y |
| 337 | The WAN-level ASAC must be able to account for each subtended LSC under its control. Therefore, the MFSS and WAN SS ASAC must be able to set call budgets for multiple LSC locations via the VVoIP EMS and local EMS access points. | 5.3.2.17.3.4.2.13 | Y | | Y |
| 338 | The LSC-level ASAC is required to only account for itself. Therefore, the LSC ASAC must be able to set call budgets for only the PEI/AEIs under its control via the VVoIP EMS and local EMS access points. | 5.3.2.17.3.4.2.13 | | Y | |
| 339 | The product shall have the capability of setting a PEI/AEI's maximum allowed precedence level for originating a call. This is a "subscriber class mark feature," which is controlled by the LSC system administrator. | 5.3.2.17.3.4.2.14 | | Y | |
| 340 | The product shall have the capability of controlling the destination(s) that a PEI or AEI is restricted from calling. This is a subscriber class mark feature that is controlled by the LSC system administrator. | 5.3.2.17.3.4.2.14 | | Y | |
| 341 | The ASAC must provide the separate counts for voice and video, in 5-minute intervals. The MFSS and WAN SS ASAC must provide these counts for each of the subtended LSCs under its control, while the LSC is only to provide these counts for the PEIs/AEIs that it controls. | 5.3.2.18.2 | Y | Y | Y |
| 342 | A switching network appliance shall acquire, activate, and manage a CCA software download as directed by the Local EMS. The CCA software may be managed on a per CCA hardware component basis. | 5.3.2.18.3.1.1 | Y | Y | Y |
| 343 | The CCA shall be able to manage the following parameters in the CCA from the VVoIP EMS:<br>• CCA Identification parameter<br>• Recording Office Identification parameter | 5.3.2.18.3.1.1 | Y | Y | Y |
| 344 | The CCA shall manage the activation and deactivation of service features. The CCA shall maintain data for the media server and UFS functions it interacts with. The CCA shall be able to create a backup and manage restoration of configuration data by placing its stable data and changes to the latest configuration in a nonvolatile storage device. | 5.3.2.18.3.2 | Y | Y | Y |
| 345 | A CCA shall meet all applicable Operations Technology Generic Requirements (OTGR) for switching system NE trouble isolation in Telcordia Technologies GR-474-CORE. A CCA shall perform root-cause analysis for any faults within its purview, report the root cause, and suppress the reporting of non-root-cause conditions. A CCA shall support the ability to perform internal diagnostics on its call processing functionality and internal resources, initiated either locally or upon request by the VVoIP EMS. | 5.3.2.18.3.3 | Y | Y | Y |
| 346 | The CCA shall provide trunk group-related traffic measurements as specified in Telcordia Technologies GR-477-CORE, Section 4.1.3. For all calls originating at a CCA, the CCA shall monitor call set-up delay statistics, including delay incurred as part of the set-up of the core network bearer connection. | 5.3.2.18.3.5 | Y | Y | Y |
| 347 | An MG shall manage logical and physical resource inventory information. An MG shall issue an autonomous notification to the VVoIP EMS whenever a new inventory or capabilities are added, or configuration is changed through local management activity. An MG maintains the information related to service features and data, including the management of service logic. | 5.3.2.18.5.1 | Y | Y | Y |
| 348 | An MG shall manage current MG state and status information about its installed major components, line and plug-in cards, and processes. | 5.3.2.18.5.1.2 | Y | Y | Y |
| 349 | Upon the detection or clearing of alarm conditions, the MG shall generate and forward, based on filtering criteria, a notification to the VVoIP EMS. An MG shall support queries for alarm status, state, and current problem information. An MG shall monitor, detect, and generate alarm conditions and states associated with hardware, functional components, system interfaces, and logical resources (e.g., trunk terminations, tone and announcement generators, media content detectors, signal processors, echo control devices). | 5.3.2.18.5.2.1 | Y | Y | Y |
| 350 | An MG shall perform root-cause analysis for any faults within its purview, report the root cause, and suppress the reporting of non-root-cause conditions. | 5.3.2.18.5.2.2 | Y | Y | Y |
| 351 | An MG shall, on request or per a pre-established schedule, run diagnostics on internal resources, hardware, or software, and report the result to the VVoIP EMS. | 5.3.2.18.5.2.3 | Y | Y | Y |
| 352 | An MG shall provide both local and remote loopback capabilities for the digital interfaces that terminate at the MG ports. | 5.3.2.18.5.2.3 | Y | Y | Y |

## Table 3-1. Unified Capabilities Products Capability/Functional Requirements Table (continued)

| ID | Requirement | UCR Ref (UCR 2008 CH1) | MFSS | LSC | WAN SS |
|---|---|---|---|---|---|
| 353 | Upon receiving a request from the VVoIP EMS or by an established schedule, an MG shall provide a report of a parameter's present or history counters. | 5.3.2.18.5.3.1 | Y | Y | Y |
| 354 | An MG shall generate TCAs to notify the VVoIP EMS when a thresholded count exceeds its threshold during a measurement interval. | 5.3.2.18.5.3.2 | Y | Y | Y |
| 355 | The MG shall manage interexchange trunk (between MG and SSP), trunk group, trunk, and physical resource inventory and configuration data. The MG shall manage MG termination-related status information. | 5.3.2.18.5.4 | Y | Y | Y |
| 356 | An MG shall, on request or on schedule, run diagnostics on internal resources and hardware, run checks on software, and report the results to the VVoIP EMS. The MG shall provide test access to external test equipment for passively monitoring the traffic through the MG interfaces. This passive monitoring shall not degrade the performance of traffic. | 5.3.2.18.5.5 | Y | Y | Y |
| 357 | The MG shall receive voice-grade analog line configuration data from the VVoIP EMS upon service activation. | 5.3.2.18.5.7 | Y | Y | Y |
| 358 | The MG shall provide diagnostic tests to detect and verify faults, such as low loop resistance or ground conditions, or any other faults within the MG that could cause false ring trip or false answer. | 5.3.2.18.5.8 | Y | Y | Y |
| 359 | The MG shall support the collection of the standard DS1, DS3, Physical Layer Convergence Protocol (PLCP), SONET, and ISDN BRI line performance monitoring requirements, as defined in Telcordia Technologies GR-820-CORE, for applicable interfaces. | 5.3.2.18.5.9 | Y | Y | Y |
| 360 | For the selected recording format that is chosen, of all the call information that will be provided, the following call data shall be provided in the record data:<br>1. Host Name of the CCA controlling the call processing.<br>2. Start Date of call (In Julian or Calendar).<br>3. Start Time of Call (Hour + Minute + Second).<br>4. Elapsed Time of Call and/or Stop Time of call.<br>5. Calling Number.<br>6. Called Number (included all dialed digits). | 5.3.2.19.2.1 | Y | Y | Y |
| 361 | For the selected recording format that is chosen, of all the call information that will be provided, the following call data shall be provided in the record data if it applies to the call: Conference Call Indicator. | 5.3.2.19.2.1 | Y | Y | Y |
| 362 | The product shall provide a voice quality record at the completion of each voice session. The voice quality record shall be included in the CDR that the LSC, MFSS, or WAN SS generates for that session, and shall conform to the E-Model, as described in TIA TSB-116-A, and ITU-T Recommendation G.107. The voice quality record shall contain the calculated R-Factor for the Voice session per TIA TSB-116-A. | 5.3.2.19.2.1.1 | Y | Y | Y |
| 363 | As part of the voice quality record, the product shall provide the raw voice session statistics that are used to make the R-Factor calculation to include, as a minimum, the latency, packet loss, Equipment Impairment Factor (Ie), and the TCLw. The product shall provide the jitter for the session. | 5.3.2.19.2.1.1 | Y | Y | Y |
| 364 | The product shall generate an alarm to the VVoIP EMS when the session R-Factor calculation in the CDR fails to meet a configurable threshold. By default, the threshold shall be an R-Factor value of 80, which is equivalent to an MOS value of 4.0. | 5.3.2.19.2.1.1 | Y | Y | Y |
| 365 | The mass storage in the BA must be non-volatile. The mass storage in the BA must be able to retain at least five average-busy-season business days of AMA data. (NOTE: This is needed to provide adequate capacity for high-volume storage of CDRs.) | 5.3.2.19.2.3 | Y | Y | Y |
| 366 | The BA should be able to output the records electronically over a secured connection. The BA should have the ability to transfer the records to a physical storage media that is also removable. | 5.3.2.19.2.4 | Y | Y | Y |

## Table 3-1. Unified Capabilities Products Capability/Functional Requirements Table (continued)

**LEGEND:**

| | |
|---|---|
| ACD | Automatic Call Distributor |
| AEI | AS-SIP End Instrument |
| AMA | Automatic Message Accounting |
| ANAT | Alternative Network Address Types |
| ANSI | American National Standards Institue |
| ASAC | Assured Services Admission Control |
| ASLAN | Assured Services Local Area Network |
| AS-SIP | Assured Services Session Initiation Protocol |
| ATQA | Attendant Queue Announcement |
| B2BUA | Back-to-back User Agent |
| BA | Billing Agent |
| BER | Bit Error Rate |
| BLV | Busy Line Verification |
| BNF | Backus-Naur Form |
| C | Conditional |
| C2 | Command and Control |
| CAC | Common Access Card |
| CAS | Channel Associated Signaling |
| CCA | Call Control Agent |
| CCS7 | Common Channel Signaling 7 |
| CDR | Call Data Record |
| CE | Customer Edge |
| CF | Call Forward |
| CH1 | Change 1 |
| CID | Craft Input Device |
| CND | Calling Number Delivery |
| CONUS | Continental United States |
| D-Channel | Data Channel |
| DB | Database |
| DHCP | Dynamic Host Configuration Protocol |
| DISA | Defense Information Systems Agency |
| DISN | Defense Information System Network |
| DN | Directory Number |
| DoD | Department of Defense |
| DS1 | Digital Signal Level 1 |
| DS3 | Digital Signal Level 3 |
| DSCP | Differentiated Services Code Point |
| DSN | Defense Switched Network |
| E2E | End-to-end |
| EBC | Edge Boundary Controller |
| EC | Echo Canceller |
| EI | End Instrument |
| EMS | Element Management System |
| EO | End Office |
| ETSI | European Telecommunications Standards Institute |
| FCAPS | Fault, Configuration, Accounting, Performance, and Security |
| FoIP | Fax over Internet Protocol |
| FQDN | Fully Qualified Domain Name |
| G3 Fax | Group 3 Facsimile |
| Hz | Hertz |
| IAD | Integrated Access Device |
| IAW | In Accordance With |
| ICA | Isolated Code Announcement |
| ID | Identification |
| ICMPv6 | Internet Control Message Protocol for IPv6 |
| Ie | Equipment Impairment Factor |
| IEEE | Institute of Electrical and Electronics Engineers, Inc. |
| IETF | Internet Engineering Task Force |
| IP | Internet Protocol |
| IPB | IP ASAC Budget |
| IPC | IP ASAC Call Count |
| IPSec | Internet Protocol Security |
| IPv4 | Internet Protocol Version 4 |
| IPv6 | Internet Protocol Version 6 |
| ISDN | Integrated Services Digital Network |
| ISUP | ISN User Part |
| ITU-T | International Telecommunications Union – Telecommunication Standardization Sector |
| IWF | Interworking Function |
| kbps | kilobits per second |
| LAN | Local Area Network |
| LDAP | Lightweight Directory Access Protocol |
| LDAPv3 | Lightweight Directory Access Protocol version 3 |
| LSC | Local Session Controller |
| MAC | Media Access Control |
| Mbps | Megabytes per second |
| MFS | Multifunction Switch |
| MFSS | Multifunction Soft Switch |
| MG | Media Gateway |
| MGC | Media Gateway Controller |
| MLD | Multicast Listener Discovery |
| MLPP | Multilevel Precedence and Preemption |
| Modem | Modulator/Demodulator |
| MoIP | Modem over Internet Protocol |
| MOS | Mean Opinion Score |
| MPLS | Multiprotocol Label Switching |
| ms | milliseconds |
| MTU | Maximum Transmission Unit |
| NE | Network Element |
| NM | Network Management |
| NMS | Network Management System |
| OA&M | Operations, Administration, and Maintenance |
| OCONUS | Outside the Continental United States |
| OSI | Open Systems Interconnect |
| OTGR | Operations Technology Generic Requirements |
| PBAS | Precedence Based Assured Services |
| PBX | Private Branch Exchange |
| PCD | Precedence Call Diversion |
| PCM | Pulse Code Modulation |
| PEI | Proprietary End Instrument |
| PLCP | Physical Layer Convergence Protocol |
| PRI | Primary Rate Interface |
| PSTN | Public Switch Telephone Network |
| REL | Release Message |
| RFC | Request For Communication |
| RTS | Real Time Services |
| SAC | Session Admission Control |
| SBU | Sensitive, but Unclassified |
| SCIP | Secure Communications Interoperability Protocol |
| SCS | Session Control and Signaling |
| SDP | Session Description Protocol |
| SG | Signaling Gateway |
| SIP | Session Initiation Protocol |
| SMEO | Small End Office |
| SONET | Synchronous Optical Network |
| SRTCP | Secure Real-Time Transport Control Protocol |
| SRTP | Secure Real-Time Transport Protocol |
| SS | Softswitch |
| SS7 | Signaling System number 7 |
| SUT | System Under Test |
| TA | Terminal Adaptor |
| TCA | Threshold Crossing Alert |
| TCLw | Weighted Terminal Coupling Loss |
| TDM | Time Division Multiplexing |
| TIA | Telecommunications Industry Association |
| TLS | Transport Layer Security |
| UAC | User Agent Client |
| UAS | User Agent Server |
| UC | Unified Capabilities |
| UCR | Unified Capabilities Requirements |
| UDP | User Datagram Protocol |
| URI | Uniform Resource Identifier |
| U.S. | United States |
| VBD | Voice Band Data |
| VoIP | Voice over Internet Protocol |
| VVoIP | Voice and Video over Internet Protocol |
| WAN | Wide Area Network |
| Y | Yes |