DEFENSE INFORMATION SYSTEMS AGENCY
JOINT INTEROPERABILITY TEST COMMAND
2001 BRAINARD ROAD
FORT HUACHUCA, ARIZONA 85613-7051

IN REPLY REFER TO: Networks and Transport Division (JTE) 17 June 2004

MEMORANDUM FOR DISTRIBUTION

SUBJECT: Special Interoperability Test Certification of Nortel Networks Succession Defense Switched Network (DSN) 1000M Cabinet, Succession DSN 1000M Chassis, and Succession DSN 1000 with Software Release 3.0 and Product Enhancement Packages (Includes Voice over Internet Protocol)

References: (a) DOD Directive 4630.5, "Interoperability and Supportability of Information Technology (IT) and National Security Systems (NSS)," 5 May 2004
(b) CJCSI 6212.01C, "Interoperability and Supportability of Information Technology and National Security Systems," 20 November 2003

1. References (a) and (b) establish the Defense Information Systems Agency (DISA), Joint Interoperability Test Command (JITC), as the responsible organization for interoperability test certification. Additional references are provided in enclosure 1.

2. The Nortel Networks Succession DSN 1000M Cabinet with software release 3.0, and product enhancement packages including Voice over Internet Protocol (VoIP), hereinafter referred to as the system under test (SUT), meets all of its critical interoperability requirements and is certified as interoperable for joint use within the DSN. The SUT employs a VoIP Command and Control (C2) Voice Grade (VG) Local Area Network (LAN) solution, which is also covered under this certification. The Nortel Networks Succession DSN 1000M Chassis and Succession DSN 1000 employ the same VoIP C2 VG LAN solution, software, and trunk/line card hardware as the SUT. JITC analysis determined the Succession DSN 1000M Chassis and Succession DSN 1000 including VoIP to be functionally identical to the SUT for interoperability certification purposes, and they are also certified for joint use within the DSN. The identified test discrepancies shown in the Certification Testing Summary (enclosure 2), which remained open after software patches were applied and regression testing was completed, have a minor operational impact. The SUT was tested and met the critical interoperability requirements for joint use within the DSN for the following switch types: Private Branch Exchange (PBX) 1 and PBX 2. This certification expires upon changes that could affect interoperability, but no later than three years from the date of this memorandum.

3. This certification is based on letters of compliance submitted by the vendor on 25 February 2004 and interoperability testing conducted by JITC at the Global Information Grid Network Test Facility, Fort Huachuca, AZ, from 20 November 2003 through 4 February 2004 in an environment that emulates the DSN. Enclosure 2 provides more details about the test,

documents the test results, and describes the tested network and system configurations. Enclosure 3 lists the product enhancement packages applied to the SUT for certification. System interoperability should be verified before deployment in an operational environment that varies significantly from the test environment.

4. Table 1 provides a comparison between the SUT product line as a standalone Time Division Multiplexer (TDM) switch versus a TDM switch enabled with VoIP. The VoIP C2 VG LAN certified hardware and software components are shown in table 2. The interoperability test summary of the SUT is indicated in table 3. The PBX 1 required and conditional Capability Requirements (CRs) and Feature Requirements (FRs) are listed in table 4. Conditional requirements are features and capabilities that are not considered critical for Department of Defense (DOD) mission support based on DOD policies. If these features and capabilities are provided, the switch shall perform and meet the specifications as required by reference (d). This interoperability test status is based on the PBX 1's ability to meet:

a. DSN services for Network and Applications specified in reference (c).

b. PBX 1 interface and signaling requirements for trunks/lines specified in reference (d) verified through JITC testing and/or vendor submission of Letter(s) of Compliance (LoC).

c. PBX 1 CRs and FRs specified in reference (d) verified through JITC testing and/or vendor submission of LoC.

d. The overall system interoperability performance derived from test procedures listed in reference (e).

e. VoIP C2 VG LAN interface and interoperability ERs and FRs derived from appendix 3 of reference (d).

Table 1. SUT Product Line Comparison

TDM Switch	TDM Switch VoIP Enabled
Nortel Networks Succession DSN Option 11C Cabinet Digital Switching System	Nortel Networks Succession DSN 1000M Cabinet
Nortel Networks Succession DSN Option 11C Chassis Digital Switching System	Nortel Networks Succession DSN 1000M Chassis
Nortel Networks Succession DSN 1000 Digital Switching System	Nortel Networks Succession DSN 1000
Legend: DSN - Defense Switched Network SUT - System Under Test TDM - Time Division Multiplexer VoIP - Voice over Internet Protocol	

Table 2. VoIP C2 VG LAN Certified Hardware and Software Components

Hardware	Software Release
BS 460-PWR	3.0.55
PP8600	3.5
Contivity	4.75
Signaling Server[1]	2.10.81
Voice Media Gateway Card (PEC: NTVQ01BA)	IPL 3.1
I2004 – Instrument I2002 – Instrument	1.58 1.58

Legend:

C2	- Command and Control	NM	- Network Management
BS	- Bay Stack	PP	- Passport
DSN	- Defense Switched Network	PWR	- Power over Ethernet
GUI	- Graphical User Interface	STP	- Signal Transfer Point
I	- Internet	VG	- Voice Grade
IPL	- Internet Protocol Line	VoIP	- Voice over Internet Protocol
LAN	- Local Area Network		

Note:
1. Signaling Server was certified for GUI NM interface only.

Table 3. SUT Interoperability Test Summary

DSN Trunk Interfaces			
Interface & Signaling	**Critical**	**Status**	**Remarks**
T1 CAS (MFR1, DTMF, DP)	No	Certified	Met all CRs and FRs. Restoral to service from a local red alarm not met.[1] Operational impact is minor.
E1 CAS (MFR1, DTMF, DP)	No (Europe only)	Not Tested	
T1 ISDN PRI NI 1/2 (ANSI T1. 619a)	Yes	Certified	Met all CRs and FRs. NI2 Protocol provides a release complete message in lieu of a disconnect message for unavailable resources.[2] Operational impact is minor.
E1 ISDN PRI (Q.955.3)	No (Europe only)	Not Tested	
Analog E&M Type 1	No	Not Certified	Analog E&M services are not met.[3] Operational impact is minor.
DSN Line Interfaces			
Interface & Signaling	**Critical**	**Status**	**Remarks**
2-Wire Analog	Yes	Certified	Met all CRs and FRs. Does not support intraswitch call waiting.[4] Operational impact is minor.
ISDN BRI NI 1/2	Yes	Certified	Met all CRs and FRs.
Digital Proprietary	No	Certified	Met all CRs and FRs.
VoIP	No	Certified	Met all CRs and FRs. IPv6 not met.[5] Operational impact is minor.
DSN Features and Capabilities			
Features and Capabilities	**Critical**	**Status**	**Remarks**
Common Features	No	Certified	Met all Common Features.
Attendant	No	Certified	Met all CRs and FRs except attendant services automatic recall.[6] Operational impact is minor.
Public Safety	No	Not Tested	
Preset Conferencing	No	Not Tested	
Nailed-up Connections	No	Not Tested	
PAT	No	Not Tested	
DSN Hotline services	No	Not Certified	Hotline services are not met.[7] Operational impact is minor.
Network Management	No	Certified	Met all CRs and FRs.
ISDN services (EKTS)	No	Not Tested	

Table 3. SUT Interoperability Test Summary (continued)

DSN Features and Capabilities (continued)			
Features and Capabilities	**Critical**	**Status**	**Remarks**
Synchronization	Yes	Certified	Met all CRs and FRs.
Reliability	Yes	Certified	Met all CRs and FRs.
Security[8]	Yes	Certified	Met all CRs and FRs.
VoIP System	No	Certified	Met all CRs and FRs.
VoIP LANs	No	Certified	Met all CRs and FRs.

Network Gateways				
	Interface & Signaling	**Critical**	**Status**	**Remarks**
PSTN	T1 CAS (DTMF, DP)	No	Certified	Met all CRs and FRs.
	E1 CAS (DTMF, DP)	No (Europe only)	Not Tested	
	T1 ISDN PRI NI 1/2	No	Certified	Met all CRs and FRs.
	E1 ISDN PRI (Q.931)	No (Europe only)	Not Tested	

Legend:

ANSI - American National Standards Institute
BRI - Basic Rate Interface
CAS - Channel Associated Signaling
CRs - Capability Requirements
DISN - Defense Information System Network
DP - Dial Pulse
DSN - Defense Switched Network
DTMF - Dual Tone Multi-Frequency
E&M - Ear and Mouth
E1 - European Transmission Std. (2.048 Mbps)
EKTS - Electronic Key Telephone System
FRs - Feature Requirements
GSCR - Generic Switching Center Requirements
IATP - Information Assurance Test Plan
IAW - in accordance with
IPv4 - Internet Protocol version 4
IPv6 - Internet Protocol version 6
ISDN - Integrated Services Digital Network
ITU - International Telecommunications Union
JITC - Joint Interoperability Test Command
LAN - Local Area Network
LoC - Letters of Compliance
Mbps - Megabits per second
MFR1 - Multi-Frequency R1
MLPP - Multi-Level Precedence and Preemption
NI 1/2 - National ISDN one or two
PAT - Precedence Access Threshold
PRI - Primary Rate Interface
Q.931 - ITU signaling std. for ISDN
Q.955.3 - ITU ISDN Signaling Std. For E1 MLPP
SS7 - Signaling System 7
Std. - Standard
SUT - System Under Test
T1 - Digital Transmission Link level 1 (1.544 Mbps)
T1.619a - SS7 and ISDN signaling std. for T1
VoIP - Voice over Internet Protocol

Notes:

1 The SUT does not meet the GSCR exchange requirements for restoral to service from a local red alarm. The SUT takes 30 seconds to recover versus 15 seconds. This is not critical requirement.
2 ISDN T1 PRI trunkgroups using NI 2 protocol send a release complete message in lieu of a disconnect message with Cause 46 (unavailable resources). As a result the user receives the correct announcement. The operational impact is none.
3 Analog E&M Signaling Type 1 did not pass the DSN preempt signals as required by the GSCR for the four types of preemption. Analog E&M Signaling Type 1 is not certified for use in the DSN.
4 Analog instruments do not provide intra-switch call waiting. The operational impact is minor.
5 The SUT did not meet IPv6 requirements. The operational impact is minor. IPv6 is currently not used in the DSN and the DISN is scheduled to be completely converted from IPv4 to IPv6 in 2008.
6 The SUT's attendant console does not support automatic recall of attendant. The operational impact is minor.
7 The SUT does not meet the GSCR exchange requirements for hotline services. Hotline services are not a critical requirement.
8 JITC verifies security via vendor LoC. Further testing IAW the IATP is required prior to being authorized connection approval.

Table 4. PBX 1 Requirements

DSN Trunk Interfaces				
Digital Interface	**Critical**	**Requirements Required (R) or Conditional (C)**		**References**
T1 CAS E1 CAS T1 ISDN PRI NI 1/2 (ANSI T1.619a) E1 ISDN PRI (Q955.3)	No No (Europe only) Yes No (Europe only)	Trunking	• Framing (R) • Line Code (R) • Signaling (R) • Alarms (R) • Timing (R) • WWNDP (R) • Outpulsing digit formats (C: CAS only) • Routing (C) • Trunk Groups (C) • Call Processing (C) • CAS to CCS trunk interworking (C) • PCM-24/PCM-30 Interoperation(C) • Direct Inward Dialing (C)	• GSCR Sect. 7 • GSCR Sect. 7 • GSCR Sect. 5 • GSCR Sect. 2.5.7, 7.1.4 and 7.2.2 • GSCR Sect. 11.1.1.2 • GSCR Sect. 4.5.1 • GSCR Sect. 4.5.2 • GSCR Sect. 4.2 • GSCR Sect. 2.5.5 and 2.5.6 • GSCR Sect. 4 • GSCR Sect. 3.10 • GSCR Sect. 7.3 • GSCR Sect 2.3.2
		Voice	• MOS (R) • MLPP (R) • Secure calls (R)	• CJCSI 6215.01B • CJCSI 6215.01B • CJCSI 6215.01B
		Facsimile	• Analog: EIA/TIA-465-A (R) • Digital: MIL-STD-188-161D (C)	• JTA • JTA
		Data	• Modem (VBD) (R) • 56-kbps switched data (R: ISDN PRI only) • 64-kbps switched data (R: ISDN PRI only) • NX56 synchronous BER (R: ISDN PRI only) • NX64 synchronous BER (R: ISDN PRI only) • Secure data (STE/STU-III) (R)	• CJCSI 6215.01B • GSCR Sect. 3.10 • GSCR Sect. 3.10 • GSCR Sect. 3.10 • GSCR Sect. 3.10 • GSCR Sect. 3.10
		VTC	• H.320 (R: ISDN PRI only)	• JTA
Analog Interface	**Critical**	**Requirements Required (R) or Conditional (C)**		**References**
Analog E&M Type 1	No	Trunking	• WWNDP (R) • Routing (C) • Call Processing (C) • Direct Inward Dialing (C)	• GSCR Sect. 4.5.1 • GSCR Sect. 4.2 • GSCR Sect. 4 • GSCR Sect 2.3.2
		Voice	• MOS (R) • MLPP (R) • Secure calls (R)	• CJCSI 6215.01B • CJCSI 6215.01B • CJCSI 6215.01B
		Facsimile	• Analog: EIA/TIA-465-A (R) • Digital: MIL-STD-188-161D (C)	• JTA • JTA
		Data	• Secure data (STE/STU-III) (R)	• CJCSI 6215.01B
DSN Line Interfaces				
2-Wire Analog ISDN BRI NI 1/2 2-Wire Digital VoIP	Yes Yes No No	Access	• DN Identification (R) • Line signaling (R) • Alerting Signals and Tones(R) • WWNDP (R) • Call Processing (R) • Call Treatments (R) • 2W user access (R: 2-Wire Analog only) • Analog busy/idle (R: 2-Wire Analog only)	• GSCR Sect 2.1.1 • GSCR Sect 5.2 • GSCR Sect 5.5 • GSCR Sect. 4.5 • GSCR Sect. 4.4 • GSCR Sect. 4.1 • GSCR Sect 4.3.3 • GSCR Sect 4.3.4.1
		Voice	• MOS (R) • MLPP (R) • Secure Calls (R) (ISDN BRI and Analog only)	• CJCSI 6215.01B • CJCSI 6215.01B
		Facsimile	• Analog: EIA/TIA-465-A (R) • Digital: MIL-STD-188-161D (C) (ISDN BRI only)	• JTA • JTA

Table 4. PBX 1 Requirements (continued)

DSN Line Interfaces				
Interface	**Critical**	**Requirements Required (R) or Conditional (C)**		**References**
2-Wire Analog ISDN BRI NI 1/2 2-Wire Digital	Yes Yes No	Data	• Modem (VBD) (R) (Analog only) • 56-kbps switched data (R: ISDN BRI only) • 64-kbps switched data (R: ISDN BRI only) • NX56 synchronous BER (R:ISDN BRI only) • NX64 synchronous BER (R: ISDN BRI only) • Secure data (STE/STU-III) (R) (ISDN BRI and Analog only)	• CJCSI 6215.01B • GSCR Sect. 3.10 • GSCR Sect. 3.10 • GSCR Sect. 3.10 • GSCR Sect. 3.10 • GSCR Sect. 3.10
VoIP	No	VTC	• H.320 (R: ISDN BRI only)	• JTA

DSN Features & Capabilities			
Interface	**Critical**	**Requirements Required (R) or Conditional (C)**	**References**
Common Features	No	• Selective call rejection (C) • Denied originating service (C) • Code restriction & diversion (C) • Call waiting (C) • Three-way calling (C) • Add-on transfer and conference calling (C) • Call forwarding (C) • Call pick-up (C)	• GSCR Sect. 2.1.2 • GSCR Sect. 2.1.3 • GSCR Sect. 2.1.4 • GSCR Sect. 2.1.5 • GSCR Sect. 2.1.6 • GSCR Sect. 2.1.7 • GSCR Sect. 2.1.8 • GSCR Sect. 2.1.9
Attendant	No	• Initiate all precedence levels (C) • Visual display (C) • Override class of service (C) • Override busy line (C) • Call deflection (C) • Auto recall (C) • Waiting queue (C)	• GSCR Sect. 2.2.1 • GSCR Sect. 2.2.2 • GSCR Sect. 2.2.3 • GSCR Sect. 2.2.4 • GSCR Sect. 2.2.5 • GSCR Sect. 2.2.6 • GSCR Sect. 2.2.7
Public Safety	No	• 911 (C) • Trace of terminating calls (C) • Outgoing call trace (C) • Tandem call trace (C) • Trace of a call in progress (C)	• GSCR Sect. 2.4.1 • GSCR Sect. 2.4.2 • GSCR Sect. 2.4.3 • GSCR Sect. 2.4.4 • GSCR Sect. 2.4.5
Preset Conferencing	No	• Support 10 bridges; 1 originator and 20 conferees (C) • Assign up to 20 address numbers per bridge (C) • Use KXX codes for bridge access (C) • Conference notification recorded announcement (C) • Auto retrial and alternate address (C) • Bridge release (C) • Lost connection (C) • Secondary conferencing (C) • Address translation (C)	• GSCR Sect. 2.6 • GSCR Sect. 2.6 • GSCR Sect. 2.6 • GSCR Sect. 2.6.1 • GSCR Sect. 2.6.2 • GSCR Sect. 2.6.3 • GSCR Sect. 2.6.4 • GSCR Sect. 2.6.5 • GSCR Sect. 2.7
Nailed-up Connections	No	• Between any two like terminations (C) • PCM-24 and PCM-30, both CAS and CCS (C) • Supervision passed end-to-end for A/D or D/A (C) • Monitored and auto reconfigure (C) • Support at least 10% of circuits as nailed-up (C) • Non-preemptable (C)	• GSCR Sect. 2.8 • GSCR Sect. 2.8 • GSCR Sect. 2.8 • GSCR Sect. 2.8 • GSCR Sect. 2.8 • GSCR Sect. 2.8

Table 4. PBX 1 Requirements (continued)

DSN Features & Capabilities			
Interface	**Critical**	**Requirements Required (R) or Conditional (C)**	**References**
PAT	No	• Classmark for/not for PAT screening (C) • 7 PAT mechanisms (C) • Outgoing call screening • Functional structure (C) • Simultaneous calls limitation (C) • Overflow process (C) • Decrementing call -in-progress count (C) • Call treatment (C) • Queuing (C) • Attendant calls (C) • Operation measurement registers (C) • Maintenance and Administration of thresholds (C)	• GSCR Sect. 2.11.1 • GSCR Sect. 2.11.1 • GSCR Sect. 2.11.1.1 • GSCR Sect. 2.11.1.2 • GSCR Sect. 2.11.1.3 • GSCR Sect. 2.11.1.4 • GSCR Sect. 2.11.1.5 • GSCR Sect. 2.11.1.6 • GSCR Sect. 2.11.1.7 • GSCR Sect. 2.11.1.8 • GSCR Sect. 2.11.1.9 • GSCR Sect. 2.11.1.10
DSN Hotline services	No	• Hotline restrictions (C) • Auto initiate (C) • Analog and digital (C) • Subscription basis (C) • Protected hotline calling (C) • WWNDP interoperable (C)	• GSCR Sect. 2.12 • GSCR Sect. 2.12 • GSCR Sect. 2.12 • GSCR Sect. 2.12 • GSCR Sect. 2.12.1-4 • GSCR Sect. 2.12.5
Network Management	No	• Interfaces (C) • Measurements and data generation (C) • Fault management (C) • Configuration management (C) • Accounting management (C) • Performance management (C) • NM controls (C) • Remote access (C)	• GSCR Sect. 9.1 • GSCR Sect. 9.2 • GSCR Sect. 9.3 • GSCR Sect. 9.4 • GSCR Sect. 9.5 • GSCR Sect. 9.6 • GSCR Sect. 9.7 • GSCR Sect. 9.8
ISDN services	No	• EKTS (C)	• GSCR Sect. 10, table 10-3
Synchronization	Yes	• Line timing mode (R) • Internal Stratum 4 (R)	• GSCR Sect. 11.1.1.2 • GSCR Sect. 11.1.2.2
Reliability	No	• GR-512-CORE (R)	• GSCR Sect.12
Security[1]	Yes	• DITSCAP (R)	• DODI 8100.3
VoIP System	No	**VoIP function is conditional. If VoIP is provided, all of the following requirements must be met:** • LAN parameters • CoS /QoS • VLANs • IEEE Stds. Conformance • .99999 availability • Modular devices • 2 sec. link restoral • LAN NM • Traffic Engineering	• GSCR App. 3 • GSCR App. 3 • GSCR App. 3 • GSCR App. 3 • GSCR App. 3 • GSCR App. 3 • GSCR App. 3 • GSCR App. 3 • GSCR App. 3

Table 4. PBX 1 Requirements (continued)

DSN Features & Capabilities				
Interface	**Critical**	**Requirements Required (R) or Conditional (C)**		**References**
VoIP				
VoIP System	No	**VoIP function is conditional. If VoIP is provided all of the following requirements must be met:** • LAN parameters • CoS /QoS • VLANs • IEEE Stds. Conformance • .99999 availability • Modular devices • 2 sec. link restoral • LAN NM • Traffic Engineering		• GSCR App. 3 • GSCR App. 3 • GSCR App. 3 • GSCR App. 3 • GSCR App. 3 • GSCR App. 3 • GSCR App. 3 • GSCR App. 3 • GSCR App. 3
LANs	No	**VoIP function is conditional. If VoIP is provided all of the following requirements must be met:** • LAN parameters • CoS • Queuing mechanisms • Policing mechanism • VLAN support • NM and voice in different VLAN • IEEE stds. Conformance • 2 sec. link restoral • LAN NM • Traffic Engineering		• GSCR App. 3 • GSCR App. 3 • GSCR App. 3 • GSCR App. 3 • GSCR App. 3 • GSCR App. 3 • GSCR App. 3 • GSCR App. 3 • GSCR App. 3 • GSCR App. 3
Network Gateways				
Gateway	**Critical**	**Requirements Required (R) or Conditional (C)**		**References**
PSTN	No	Trunking	• Positive Identification Control (C) • On-Netting (C) • Off Netting (C)	• CJCSI 6215.01B • CJCSI 6215.01B • CJCSI 6215.01B

Table 4. PBX 1 Requirements (continued)

Legend:

2W	- 2-Wire	KXX	- K= any number 2-8; X= any number 1-9
911	- 911 Emergency Service	LAN	- Local Area Network
A/D	- Analog to Digital	LoC	- Letter(s) of Compliance
ANSI	- American National Standards Institute	Mbps	- Megabits per second
App	- Appendix	MIL-STD	- Military Standard
BER	- Bit Error Ratio	MLPP	- Multi-Level Precedence and Preemption
BRI	- Basic Rate Interface	MOS	- Mean Opinion Score
CAS	- Channel Associated Signaling	NI 1/2	- National ISDN Std. one or two
CCS	- Common Channel Signaling	NM	- Network Management
CJCSI	- Chairman Joint Chiefs of Staff Instruction	NX56	- Data format restricted to multiples of 56 kbps
CoS	- Class of Service	NX64	- Data format restricted to multiples of 64 kbps
D/A	- Digital to Analog	PAT	- Precedence Access Threshold
DISA	- Defense Information Systems Agency	PBX	- Private Branch Exchange
DITSCAP	- Department of Defense Information Technology Security Certification and Accreditation Process	PCM-24	- Pulse Code Modulation 24 Channels
		PCM-30	- Pulse Code Modulation 30 Channels
DN	- Directory Number	PRI	- Primary Rate Interface
DODI	- Department of Defense Instruction	PSTN	- Public Switched Telephone Network
DSN	- Defense Switched Network	Q.955.3	- ITU ISDN Signaling Std. For E1 MLPP
E&M	- Ear and Mouth	QoS	- Quality of Service
E1	- European Transmission Std. (2.048 Mbps)	sec.	- second
EIA	- Electronic Industries Alliance	Sect.	- section
EKTS	- Electronic Key Telephone System	SS7	- Signaling System 7
GR	- Generic Requirement (Telcordia)	Std.	- Standard
GSCR	- Generic Switching Center Requirements	STE	- Secure Terminal Equipment
H.320	- ITU Std. For narrowband VTC	STU-III	- Secure Telephone Unit-III
IATP	- Information Assurance Test Plan	T1	- American Transmission Std. (1.544 Mbps)
IAW	- in accordance with	T1.619a	- SS7 and ISDN MLPP Signaling Std. For T1
IEEE	- Institute of Electrical and Electronics Engineers, Inc.	TIA	- Telecommunications Industry Association
ISDN	- Integrated Services Digital Network	VBD	- Variable bit data
ITU	- International Telecommunication Union	VLAN	- Virtual Local Area Network
JITC	- Joint Interoperability Test Command	VoIP	- Voice over Internet Protocol
JTA	- Joint Technical Architecture	VTC	- Video Teleconferencing
kbps	- kilobits per second	WWNDP	- Worldwide Numbering and Dialing Plan

Note: JITC verifies security via an LoC. Further testing IAW the IATP is required prior to being authorized connection approval.

5. JITC distributes interoperability information via the JITC Electronic Report Distribution (ERD) system, which uses Unclassified but Sensitive Internet Protocol Router Network (NIPRNet) e-mail. More comprehensive interoperability status information is available via the JITC System Tracking Program (STP). The STP is accessible by .mil/gov users on the NIPRNet at https://stp.fhu.disa.mil/. Test reports, lessons learned, and related testing documents and references are on the JITC Joint Interoperability Tool (JIT) at http://jit.fhu.disa.mil (NIPRNet), or http://199.208.204.125/ (SIPRNet). Information related to DSN testing is on the Telecom Switched Services Interoperability (TSSI) website at http://jitc.fhu.disa.mil/tssi.

JITC Memo, JTE, Special Interoperability Test Certification of Nortel Networks Succession Defense Switched Network (DSN) 1000M Cabinet, Succession DSN 1000M Chassis, and Succession DSN 1000 with Software Release 3.0 and Product Enhancement Packages (Includes Voice over Internet Protocol)

6. The JITC point of contact is Mr. John Hooper, DSN 879-5041, commercial (520) 538-5041, FAX DSN 879-4347, or e-mail to hooperj@fhu.disa.mil.

FOR THE COMMANDER:

3 Enclosures a/s

LESLIE CLAUDIO
Chief
Networks and Transport Division

Distribution:
Joint Staff J6I, Room-1E565, Pentagon, Washington, DC 20318-6000
Joint Interoperability Test Command, Washington Operations Division, NSWC, ATTN: JT1, Building 900, 101 Strauss Avenue, Indian Head, MD 20640-5035
Defense Information Systems Agency, GIG Enterprise Services Engineering Directorate, NETCENTRICITY, REQUIREMENTS, ANALYSIS & ASSESSMENTS BRANCH, ATTN: GE333, Rm. 244, 5600 Columbia Pike, Falls Church, VA 22041-2770
Defense Information Systems Agency, GIG-Combat Support Directorate, DSN SYSTEMS MANAGEMENT BRANCH, ATTN: GS235, Rm. 5W248A, 5275 Leesburg Pike, Falls Church, VA 22041
Office of Chief of Naval Operations (N61C22), CNON6/7, 2000 Navy Pentagon, Washington, DC 20350
Headquarters US Air Force, AF/XICC, 1250 Pentagon, Washington, DC 20330-1250
Department of the Army, Office of the Secretary of the Army, G-6/ASA (ALT), ATTN: ASAALT (SAAL-SSI), 103 Army Pentagon, Washington, DC 20310-0103
US Marine Corp (C4ISR), MARCORSYSCOM, 2200 Lester Street, Quantico, VA 22134
DOT&E, Strategic and C3I Systems, 1700 Defense Pentagon, Washington, DC 20301-1700
US Coast Guard, COMDT/G-SCE (C4), 2100 2nd Street SW, Washington, DC 20593
Office of Assistant Secretary of Defense, OASD(NII)/DoD CIO, Crystal Mall 3, 7th Floor, Suite 700, 1931 Jefferson-Davis Hwy, Arlington, VA 22202
Office of Under Secretary of Defense, OUSD(AT&L), Room 3E144, 3070 Defense Pentagon, Washington, DC 20301
US Joint Forces Command, J6I, C4 Plans and Policy, 1562 Mitscher Ave, Norfolk, VA 23551-2488
Defense Intelligence Agency, ATTN: DS-CIO, Bldg 6000, Bolling AFB, Washington, DC 20340-3342
National Security Agency, ATTN: DT, Suite 6496, 9800 Savage Road, Fort Meade, MD 20755-6496
Commander, Defense Information Systems Agency (DISA), ATTN: GS23 (Mr. Osman), Room 5w23, 5275 Leesburg Pike (RTE 7), Falls Church, VA 22041

ADDITIONAL REFERENCES

(c) Chairman of the Joint Chiefs of Staff Instruction (CJCSI) 6215.01B, "Policy for Department of Defense Voice Services," 23 September 2001

(d) Defense Information Systems Agency (DISA), "Defense Switched Network (DSN) Generic Switching Center Requirements (GSCR)," 8 September 2003

(e) Joint Interoperability Test Command, "Draft, Defense Switched Network Generic Switch Test Plan (GSTP)," 19 June 1999

CERTIFICATION TESTING SUMMARY

1. SYSTEM TITLE. Nortel Networks Succession Defense Switched Network (DSN) 1000M Cabinet with Software Release 3.0, hereinafter referred to as the System Under Test (SUT).

2. PROPONENT. Defense Information Systems Agency (DISA).

3. PROGRAM MANAGER. Mr. Howard Osman, GS23, Room 5W23, 5275 Leesburg Pike, Falls Church, VA 22041, E-mail: Osmanh@ncr.disa.mil.

4. TESTER. Joint Interoperability Test Command (JITC), Fort Huachuca, AZ.

5. SYSTEM UNDER TEST DESCRIPTION. The SUT utilizes a Voice over Internet Protocol (VoIP) Command and Control (C2) Voice Grade (VG) Local Area Network (LAN). The SUT offers the following features: VoIP C2 VG LAN solution, scalable, distributed platform for growth from 1 to 200 lines, modular client/server architecture for flexibility, and scalability. The Nortel Networks Succession DSN 1000M Chassis and Succession DSN 1000 employ the same VoIP C2 VG LAN solution, software, and trunk/line card hardware as the SUT. JITC analysis determined the Succession DSN 1000M Chassis and Succession DSN 1000 including VoIP to be functionally identical to the SUT for interoperability certification purposes, and they are also certified for joint use within the DSN. Table 2-1 provides a comparison between the SUT product line as a standalone Time Division Multiplexer (TDM) switch versus a TDM switch enabled with VoIP.

6. OPERATIONAL ARCHITECTURE. The DSN architecture is a two-level network hierarchy consisting of DSN backbone switches and Military/Agency installation switches. Joint Staff policy and subscriber mission requirements determine which type of switch can be used at a particular location. The DSN architecture therefore consists of several categories of switches including Private Branch Exchanges (PBXs). PBXs are Military Department (MILDEP)-controlled elements of the DSN. The Generic Switching Center Requirements (GSCR) operational DSN Architecture is depicted in figure 2-1. The architecture depicts the relationship of MILDEP PBX 1s to the rest of the DSN switch types.

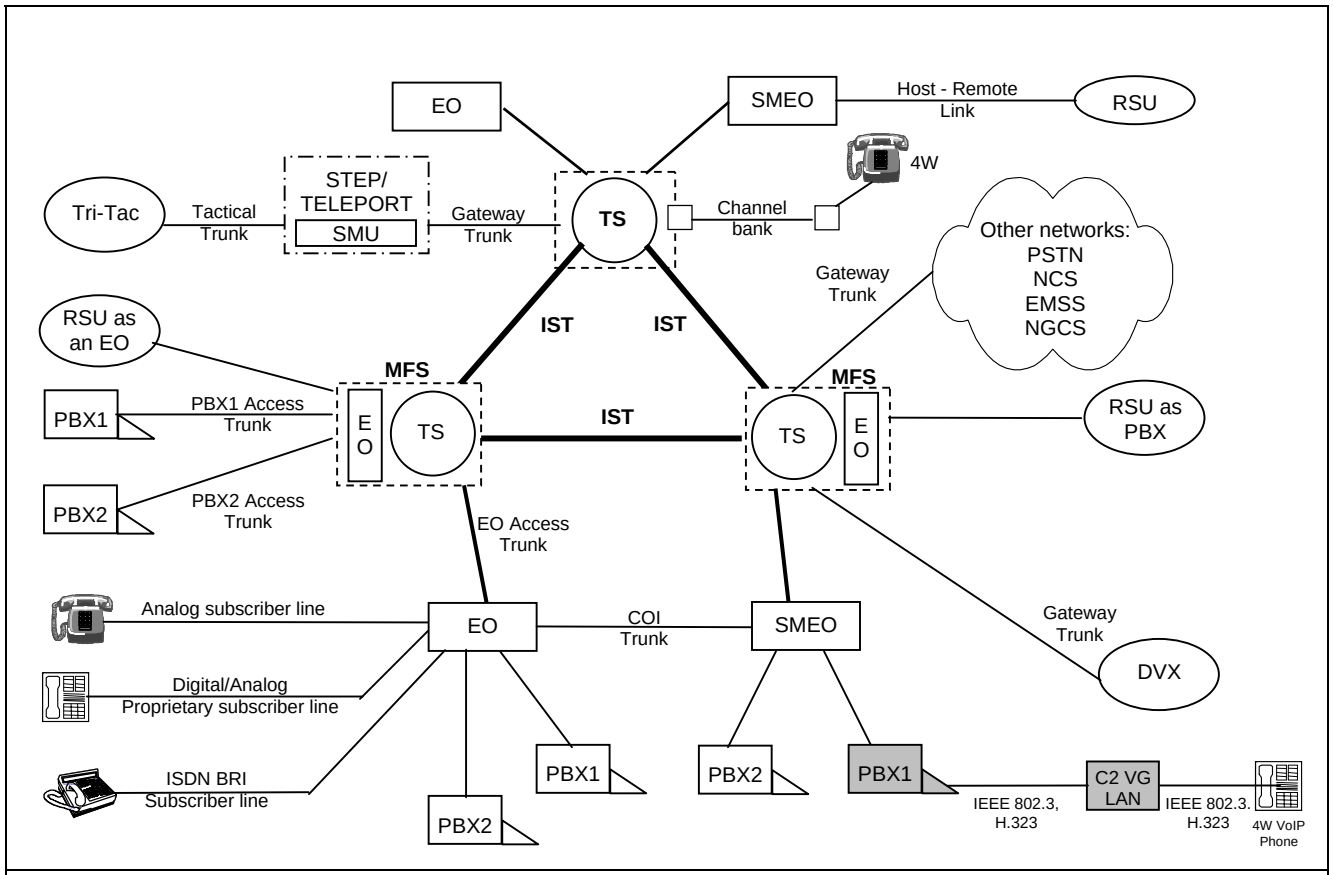

Legend:

4W	- 4 wire	MLPP	- Multi-Level Precedence and Preemption
BRI	- Basic Rate Interface	NATO	- North Atlantic Treaty Organization
C2	- Command and Control	NCS	- National Communications System
COI	- Community of Interest	NGCS	- NATO Gateway Communications Switch
DSN	- Defense Switched Network	PBX 1	- Private Branch Exchange 1 (MLPP)
DVX	- Deployable Voice Exchange	PBX 2	- Private Branch Exchange 2 (non-MLPP)
EMSS	- Enhanced Mobile Satellite System	PSTN	- Public Switched Telephone Network
EO	- End Office	RSU	- Remote Switching Unit
H.323	- Standard for multi-media communications on packet-based networks	SMEO	- Small End Office
		SMU	- Switched Multiplexer Unit
IEEE	- Institute of Electrical and Electronics Engineers, Inc.	STEP	- Standardized Tactical Entry Point
IEEE 802.3	- Ethernet protocol	Tri-Tac	- Tri-Service Tactical
ISDN	- Integrated Services Digital Network	TS	- Tandem Switch
IST	- Interswitch Trunk	VG	- Voice Grade
LAN	- Local Area Network	VoIP	- Voice over Internet Protocol
MFS	- Multifunction Switch		

Figure 2-1. DSN Architecture

7. REQUIRED SYSTEM INTERFACES. Requirements specific to PBX 1s are listed in table 2-2. These requirements are derived from:

a. DSN services for Network and Applications specified in Chairman Joint Chiefs of Staff instruction (CJCSI) 6215.01B, “Policy for Department of Defense Voice Services.”

b. GSCR interface and signaling requirements for trunks/lines verified through JITC testing and/or vendor submission of Letter(s) of Compliance (LoC).

c. GSCR PBX 1 Capability Requirements (CRs) and Feature Requirements (FRs) verified through JITC testing and/or vendor submission of LoC.

Table 2-1. SUT Product Line Comparison

TDM Switch	TDM Switch VoIP Enabled
Nortel Networks Succession DSN Option 11C Cabinet Digital Switching System	Nortel Networks Succession DSN 1000M Cabinet
Nortel Networks Succession DSN Option 11C Chassis Digital Switching System	Nortel Networks Succession DSN 1000M Chassis
Nortel Networks Succession DSN 1000 Digital Switching System	Nortel Networks Succession DSN 1000
Legend: DSN - Defense Switched Network SUT - System Under Test TDM - Time Division Multiplexer VoIP - Voice over Internet Protocol	

Table 2-2. PBX 1 Requirements

DSN Trunk Interfaces				
Digital Interface	**Critical**	**Requirements Required (R) or Conditional (C)**		**References**
T1 CAS E1 CAS T1 ISDN PRI NI 1/2 (ANSI T1.619a) E1 ISDN PRI (Q.955.3)	Yes No (Europe only) Yes No (Europe only)	Trunking	• Framing (R) • Line Code (R) • Signaling (R) • Alarms(R) • Timing (R) • WWNDP (R) • Outpulsing digit formats (C: CAS only) • Routing (C) • Trunk Groups(C) • Call Processing (R) • CAS to CCS trunk interworking (C) • PCM-24/PCM-30 Interoperation(C) • Direct Inward Dialing (C)	• GSCR Sect. 7 • GSCR Sect. 7 • GSCR Sect. 5 • GSCR Sect. 2.5.7, 7.1.4 & 7.2.2 • GSCR Sect. 11.1.1.2 • GSCR Sect. 4.5.1 • GSCR Sect. 4.5.2 • GSCR Sect. 4.2 • GSCR Sect. 2.5.5 & 2.5.6 • GSCR Sect. 4 • GSCR Sect. 3.10 • GSCR Sect. 7.3 • GSCR Sect 2.3.2
		Voice	• MOS (R) • MLPP (R) • Secure calls (R)	• CJCSI 6215.01B • GSCR Sect. 3 • CJCSI 6215.01B
		Facsimile	• Analog: EIA/TIA-465-A (R) • Digital: MIL-STD-188-161D (C)	• JTA • JTA
		Data	• Modem (VBD) (R) • 56-kbps switched data (R: ISDN PRI only) • 64-kbps switched data (R: ISDN PRI only) • NX56 synchronous BER (R: ISDN PRI only) • NX64 synchronous BER (R: ISDN PRI only) • Secure data (STE/STU-III) (R)	• CJCSI 6215.01B • GSCR Sect. 3.10 • GSCR Sect. 3.10 • GSCR Sect. 3.10 • GSCR Sect. 3.10 • GSCR Sect. 3.10
		VTC	• H.320 (C: ISDN PRI only)	• JTA
Analog Interface	**Critical**	**Requirements Required (R) or Conditional (C)**		**References**
Analog E&M Type1	No	Trunking	• WWNDP (R) • Routing (C) • Call Processing (C) • Direct Inward Dialing (C)	• GSCR Sect. 4.5.1 • GSCR Sect. 4.2 • GSCR Sect. 4 • GSCR Sect 2.3.2
		Voice	• MOS (R) • MLPP (R) • Secure calls (R)	• CJCSI 6215.01B • CJCSI 6215.01B • CJCSI 6215.01B
		Facsimile	• Analog: EIA/TIA-465-A (R) • Digital: MIL-STD-188-161D (C)	• JTA • JTA
		Data	• Secure data (STE/STU-III) (R)	• CJCSI 6215.01B

Table 2-2. PBX 1 Requirements (continued)

DSN Line Interfaces				
Features/ Capabilities	**Critical**	**Requirements Required (R) or Conditional (C)**		**References**
2-Wire Analog ISDN BRI NI 1/2 2-Wire Digital VoIP	Yes Yes No No	Access	• DN Identification (R) • Line signaling (R: Ground Start and Loop Start) • Alerting Signals and Tones (C) • WWNDP(C) • Call Processing (C) • Call Treatments (C) • 2W user access (R: 2-Wire Analog only) • Analog busy/idle (R: 2-Wire Analog only)	• GSCR Sect 2.1.1 • GSCR Sect 5.2 • GSCR Sect 5.5 • GSCR Sect. 4.5 • GSCR Sect. 4.4 • GSCR Sect. 4.1 • GSCR Sect 4.3.3 • GSCR Sect 4.3.4.1
		Voice	• MOS (R) • MLPP (R) • Secure Calls (R) (ISDN BRI and Analog only)	• CJCSI 6215.01B • GSCR Section 3.4.3, 3.9 • CJCSI 6215.01B
		Facsimile	• Analog: EIA/TIA-465-A (R) • Digital: MIL-STD-188-161D (C) (ISDN BRI only)	• JTA • JTA
		Data	• Modem (VBD) (R) • 56-kbps switched data (R: ISDNBRI only) • 64-kbps switched data (R: ISDN BRI only) • NX56 synchronous BER (R:ISDN BRI only) • NX64 synchronous BER (R:ISDN BRI only) • Secure data (STE/STU-III) (R) (ISDN BRI and Analog only)	• CJCSI 6215.01B • GSCR Sect. 3.10 • GSCR Sect. 3.10 • GSCR Sect. 3.10 • GSCR Sect. 3.10 • GSCR Sect. 3.10
		VTC	• H.320 (C: ISDN BRI only)	• JTA
DSN Features & Capabilities				
Common Features	No	• Selective call rejection (C) • Denied originating service (C) • Code restriction & diversion (C) • Call waiting (C) • Three-way calling (C) • Add-on transfer and conference calling (C) • Call forwarding (C) • Call pick-up (C)		• GSCR Sect. 2.1.2 • GSCR Sect. 2.1.3 • GSCR Sect. 2.1.4 • GSCR Sect. 2.1.5 • GSCR Sect. 2.1.6 • GSCR Sect. 2.1.7 • GSCR Sect. 2.1.8 • GSCR Sect. 2.1.9
Attendant	No	• Initiate all precedence levels (C) • Visual display (C) • Override class of service (C) • Override busy line (C) • Call deflection (C) • Auto recall (C) • Waiting queue (C)		• GSCR Sect. 2.2.1 • GSCR Sect. 2.2.2 • GSCR Sect. 2.2.3 • GSCR Sect. 2.2.4 • GSCR Sect. 2.2.5 • GSCR Sect. 2.2.6 • GSCR Sect. 2.2.7
Public Safety	No	• 911 (C) • Trace of terminating calls (C) • Outgoing call trace (C) • Tandem call trace (C) • Trace of a call in progress (C)		• GSCR Sect. 2.4.1 • GSCR Sect. 2.4.2 • GSCR Sect. 2.4.3 • GSCR Sect. 2.4.4 • GSCR Sect. 2.4.5

Table 2-2. PBX 1 Requirements (continued)

DSN Features & Capabilities			
Features/ Capabilities	**Critical**	**Requirements Required (R) or Conditional (C)**	**References**
Preset Conferencing	No	• Support 10 bridges; 1 originator and 20 conferees (C) • Assign up to 20 address numbers per bridge (C) • Use KXX codes for bridge access (C) • Conference notification recorded announcement (C) • Auto retrial and alternate address (C) • Bridge release (C) • Lost connection (C) • Secondary conferencing (C) • Address translation (C)	• GSCR Sect. 2.6 • GSCR Sect. 2.6 • GSCR Sect. 2.6 • GSCR Sect. 2.6.1 • GSCR Sect. 2.6.2 • GSCR Sect. 2.6.3 • GSCR Sect. 2.6.4 • GSCR Sect. 2.6.5 • GSCR Sect. 2.7
Nailed-up Connections	No	• Between any two like terminations (C) • PCM-24 and PCM-30, both CAS and CCS (C) • Supervision passed end-to-end for A/D or D/A (C) • Monitored and auto reconfigure (C) • Support at least 10% of circuits as nailed-up (C) • Non-preemptable (C)	• GSCR Sect. 2.8 • GSCR Sect. 2.8 • GSCR Sect. 2.8 • GSCR Sect. 2.8 • GSCR Sect. 2.8 • GSCR Sect. 2.8
PAT	No	• Classmark for/not for PAT screening (C) • 7 PAT mechanisms (C) • Outgoing call screening • Functional structure (C) • Simultaneous calls limitation (C) • Overflow process (C) • Decrementing call -in-progress count (C) • Call treatment (C) • Queuing (C) • Attendant calls (C) • Op measurement registers (C) • Maintenance and Administration of thresholds (C)	• GSCR Sect. 2.11.1 • GSCR Sect. 2.11.1 • GSCR Sect. 2.11.1.1 • GSCR Sect. 2.11.1.2 • GSCR Sect. 2.11.1.3 • GSCR Sect. 2.11.1.4 • GSCR Sect. 2.11.1.5 • GSCR Sect. 2.11.1.6 • GSCR Sect. 2.11.1.7 • GSCR Sect. 2.11.1.8 • GSCR Sect. 2.11.1.9 • GSCR Sect. 2.11.1.10
DSN Hotline services	No	• Hotline restrictions (C) • Auto initiate (C) • Analog and digital (C) • Subscription basis (C) • Protected hotline calling (C) • WWNDP interoperable (C)	• GSCR Sect. 2.12 • GSCR Sect. 2.12 • GSCR Sect. 2.12 • GSCR Sect. 2.12 • GSCR Sect. 2.12.1-4 • GSCR Sect. 2.12.5
Network Management	No	• Interfaces (C) • Measurements and data generation (C) • Fault management (C) • Configuration management (C) • Accounting management (C) • Performance management (C) • NM controls (C) • Remote access (C)	• GSCR Sect. 9.1 • GSCR Sect. 9.2 • GSCR Sect. 9.3 • GSCR Sect. 9.4 • GSCR Sect. 9.5 • GSCR Sect. 9.6 • GSCR Sect. 9.7 • GSCR Sect. 9.8
ISDN services	No	• EKTS (C)	• GSCR Sect. 10, table 10-3
Synchronization	Yes	• Line timing mode (R) • Internal Stratum 4 (R)	• GSCR Sect. 11.1.1.2 • GSCR Sect. 11.1.2.2
Reliability	Yes	• GR-512-CORE (C)	• GSCR Sect.12
Security[1]	Yes	• DITSCAP (R)	• DODI 8100.3

Table 2-2. PBX 1 Requirements (continued)

VoIP			
Features/ Capabilities	**Critical**	**Requirements Required (R) or Conditional (C)**	**References**
VoIP System	No	**VoIP function is conditional. If VoIP is provided all of the following requirements must be met:** • MOS 4.0 or better • G.711 PCM Codec • Security IAW DITSCAP • NM • Line timing • Internal Clock • Latency @ 60 msec or less • IPv6 capable	• GSCR App. 3 • GSCR App. 3 • GSCR App. 3 • GSCR App. 3 • GSCR App. 3 • GSCR App. 3 • GSCR App. 3 • GSCR App. 3
LANs	No	**VoIP function is conditional. If VoIP is provided all of the following requirements must be met:** • LAN parameters • CoS /QoS • VLANs • IEEE Stds. Conformance • .99999 availability • Modular devices • 2 sec. link restoral • LAN NM • Traffic Engineering	• GSCR App. 3 • GSCR App. 3 • GSCR App. 3 • GSCR App. 3 • GSCR App. 3 • GSCR App. 3 • GSCR App. 3 • GSCR App. 3 • GSCR App. 3

Network Gateways				
Gateway	**Critical**	**Requirements Required (R) or Conditional (C)**		**References**
PSTN	No	Trunking	• Positive Identification Control (C) • On-Netting (C) • Off Netting (C)	• CJCSI 6215.01B • CJCSI 6215.01B • CJCSI 6215.01B

Table 2-2. PBX 1 Requirements (continued)

Legend:

2W	- 2-Wire	LAN	- Local Area Network
911	- 911 Emergency Service	LoC	- Letter(s) of Compliance
A/D	- Analog to Digital	Mbps	- Megabits per second
ANSI	- American National Standards Institute	MIL-STD	- Military Standard
App	- Appendix	MLPP	- Multi-Level Precedence and Preemption
BER	- Bit Error Ratio	MOS	- Mean Opinion Score
BRI	- Basic Rate Interface	Msec	- millisecond
CAS	- Channel Associated Signaling	NI 1/2	- National ISDN Std. one or two
CCS	- Common Channel Signaling	NM	- Network Management
CJCSI	- Chairman Joint Chiefs of Staff Instruction	NX56	- Data format restricted to multiples of 56 kbps
CoS	- Class of Service	NX64	- Data format restricted to multiples of 64 kbps
D/A	- Digital to Analog	PAT	- Precedence Access Threshold
DISA	- Defense Information Systems Agency	PBX	- Private Branch Exchange
DITSCAP	- Department of Defense Information Technology Security Certification and Accreditation Process	PCM-24	- Pulse Code Modulation 24 Channels
		PCM-30	- Pulse Code Modulation 30 Channels
DN	- Directory Number	PRI	- Primary Rate Interface
DODI	- Department of Defense Instruction	PSTN	- Public Switched Telephone Network
DSN	- Defense Switched Network	Q.955.3	- ITU ISDN Signaling Std. For E1 MLPP
E&M	- Ear and Mouth	QoS	- Quality of Service
E1	- European Transmission Std. (2.048 Mbps)	sec.	- second
EIA	- Electronic Industries Alliance	Sect.	- section
EKTS	- Electronic Key Telephone System	SS7	- Signaling System 7
GR	- Generic Requirement	Std.	- Standard
GSCR	- Generic Switching Center Requirements	STE	- Secure Terminal Equipment
H.320	- ITU Std. for narrowband VTC	STU-III	- Secure Telephone Unit-III
IATP	- Information Assurance Test Plan	T1	- American Transmission Std. (1.544 Mbps)
IAW	- in accordance with	T1.619a	- SS7 and ISDN MLPP Signaling Std. For T1
IEEE	- Institute of Electrical and Electronics Engineers, Inc.	TIA	- Telecommunications Industry Association
ISDN	- Integrated Services Digital Network	VBD	- Variable bit data
ITU	- International Telecommunication Union	VLAN	- Virtual Local Area Network
JITC	- Joint Interoperability Test Command	VoIP	- Voice over Internet Protocol
JTA	- Joint Technical Architecture	VTC	- Video Teleconferencing
kbps	- kilobits per second	WWNDP	- Worldwide Numbering and Dialing Plan
KXX	- K= any number 2-8; X= any number 1-9		

Note: JITC verifies security via a LoC. Further testing IAW the IATP is required prior to being authorized connection approval.

8. TEST NETWORK DESCRIPTION. The SUT was tested at JITC's Global Information Grid Network Test Facility in a manner and configuration similar to that of the DSN operational environment. This test was conducted using the three test configurations as shown in figures 2-2 through 2-4. Testing of the system's required functions and features was conducted using the notional test configuration depicted in figure 2-2. Per this configuration, the SUT was tested as the end-point in relation to the other switches. This configuration accurately emulates the DSN operational environment. Figure 2-3 depicts the test configuration used to test the Advanced DSN Integrated Management Support System network management required functions and features. Figure 2-4 depicts the C2 VG LAN used to provide connectivity for VoIP.

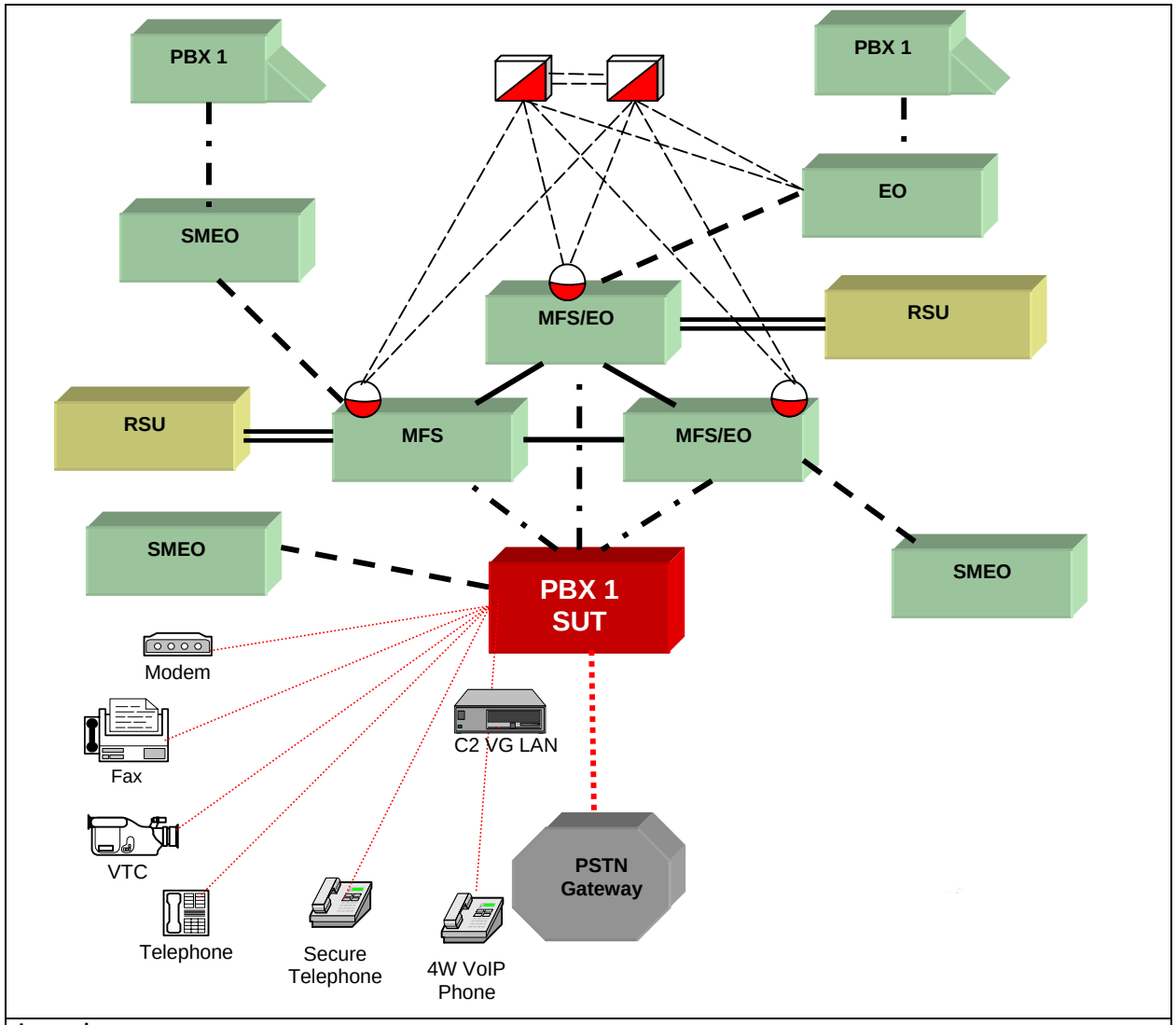

Legend:

4W	- 4-Wire
BRI	- Basic Rate Interface
C2	- Command and Control
CAS	- Channel Associated Signaling
DSN	- Defense Switched Network
E1	- European Transmission Standard (2.048 Mbps)
EOS	- End Office
FAX	- facsimile
ISDN	- Integrated Services Digital Network
LAN	- Local Area Network
Mbps	- Megabits per second
MFS	- Multifunction Switch
PBX 1	- Private Branch Exchange Type 1
PRI	- Primary Rate Interface
PSTN	- Public Switched Telephone Network
RSU	- Remote Switching Unit
SMEO	- Small End Office
SS7	- Signaling System 7
SUT	- System Under Test
T1	- American Transmission Standard (1.544 Mbps)
VG	- Voice Grade
VoIP	- Voice over Internet Protocol
VTC	- Video Teleconferencing

SS7 Service Switching Point (SSP)

SS7 Signal Transfer Point (STP)

DSN Gateway Trunk

DSN Interswitch Trunk (T1/E1 SS7, T1/E1 CAS, T1/E1 ISDN PRI)

DSN Line (2 Wire Analog, ISDN BRI, Digital Proprietary)

SS7 Links (A-Link, B-Link, or C-Link)

DSN End Office Access Trunk (T1/E1 SS7, T1/E1 CAS, T1/E1 ISDN PRI)

DSN PBX Access Trunk (T1/E1 SS7, T1/E1 CAS, T1/E1 ISDN PRI)

RSU-Host Umbilical Link

Figure 2-2. Notional Test Configuration

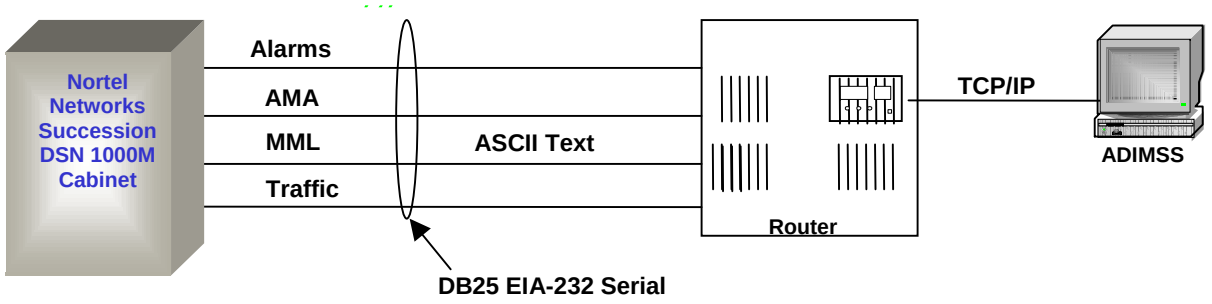

Legend:

ADIMSS	- Advanced Defense Switched Network Integrated Management Support System
Alarms	- Fault Management
AMA	- Automated Message Accounting (Accounting Management)
ASCII	- American Standard Code for Information Interchange
DB	- “D” describes the shape of the housing, “B” describes the size of the housing
DSN	- Defense Switched Network
EIA	- Electronic Industries Alliance
MML	- Man Machine Language (Remote access to switch)
SUT	- System Under Test
TCP/IP	- Transmission Control Protocol/Internet Protocol
Traffic	- Performance Management

Figure 2-3. SUT ADIMSS Network Management System Interface

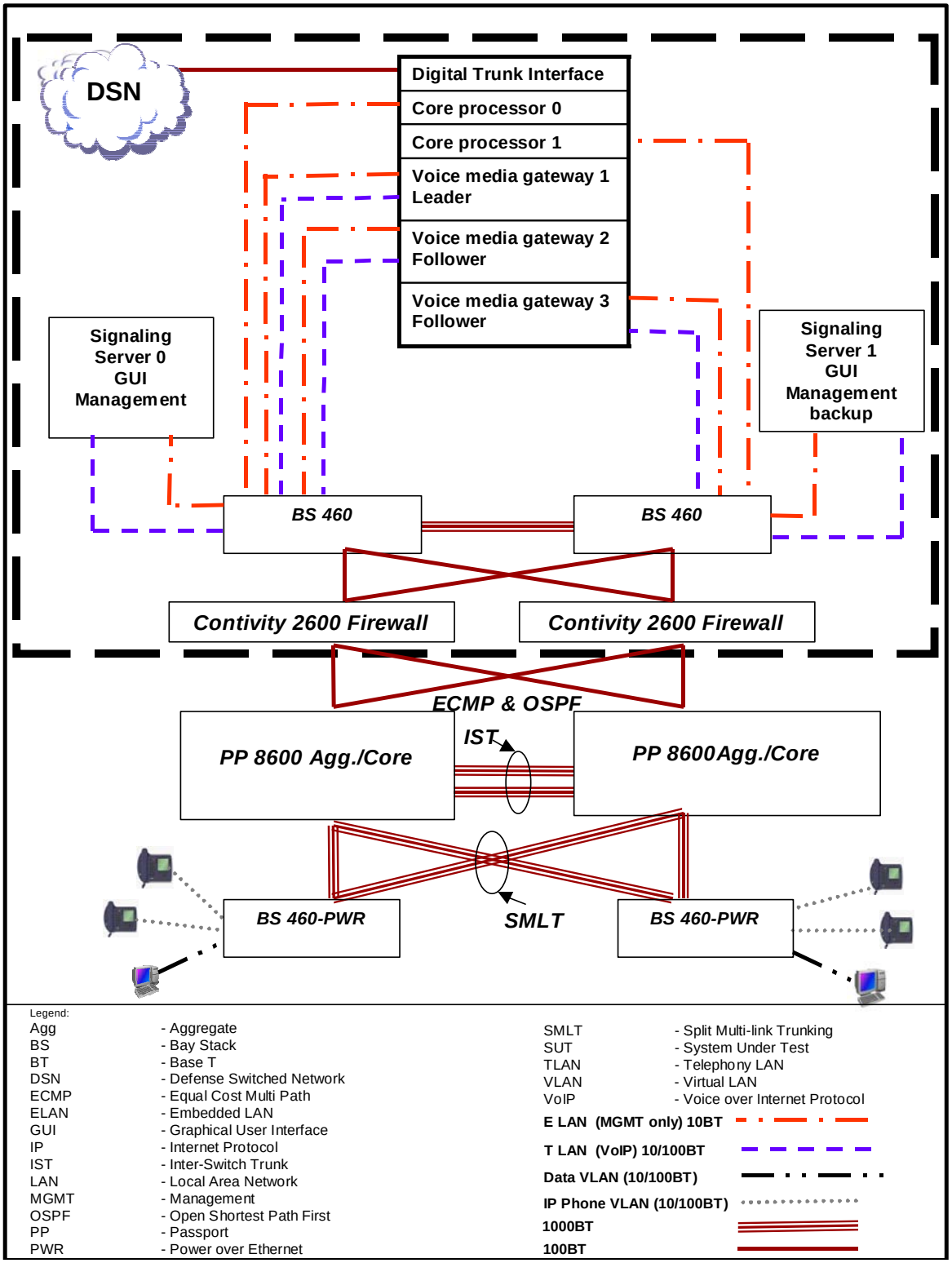

Figure 2-4. SUT Command and Control Voice Grade Local Area Network

9. SYSTEM CONFIGURATIONS. Table 2-3 provides the system configurations used in the test.

Table 2-3. Tested System Configurations

System Name	Software Release	
Nortel Networks MSL-100	SEO6	
Avaya MultiVantage S8700	R011x.7585.7.0.2	
Nortel Networks Succession DSN 1000M Cabinet	Product Engineer Code (PEC)	Software Release
Call Server	NTDK20EA	3.0
Trunk Module Digital Interface Card	NTRB21AB	
Trunk Module Digital Interface Card	NTRB21AC	
Multipurpose ISDN Signaling Processor Card	NTBK22AA	
Serial Data Interface Card	N7AK02BC	
Digital Line Card	NT8D02GA	
Analog Line Card	NT8D09AK	
Universal Interface Line Card	NT6D71AA	
Siemens EWSD	19d with Patch Set 32	
Nortel Networks Succession DSN 1000M Single Group	3.0	
Siemens KNS-4100	APS4V2.3	
Lucent Technologies 5ESS	5E16.2	
SMU 96 Tactical Gateway	RD302185	
MARCONI ATM switches	Versions 6.2 and 7.1	
Command and Control Voice Grade Local Area Network Components and Software		
Hardware	**Software/Firmware**	
BS460-PWR	3.0.55	
PP8600	3.5	
Contivity	4.75	
Signaling Server (see note)	2.10.81	
Voice Media Gateway Card (PEC: NTVQ01BA)	IPL 3.1	
I2004 –Instrument I2002 – Instrument I2050 – Instrument	1.58 1.58 V333	

Legend:

ATM - Asynchronous Transfer Mode
BS - Bay Stack
DSN - Defense Switched Network
EWSD - Elektronisches Wählsystem Digital
GUI - Graphical User Interface
I - Internet
IPL - Internet Protocol Line
ISDN - Integrated Services Digital Network
M - Meridian 1
MSL - Meridian Switching Load
NM - Network Management
PP - Passport
PWR - Power over Ethernet
SMU - Switch Multiplexer Unit
STP - Signal Transfer Point

Note: Signaling Server was certified for GUI NM interface only.

10. TESTING LIMITATIONS. None.

11. TEST RESULTS

a. Discussion

(1) DSN

(a) All critical interface CRs and FRs for DSN were met. The following minor exceptions are noted:

1. The SUT does not meet the following GSCR requirement: recovery from a local red alarm within the allowed time period on a Pulse Code Modulation-24 channel (PCM-24) interface. It takes approximately 30 seconds for a PCM-24 interface on the SUT to recover from a red alarm. The GSCR requirement for recovery from a local red alarm is 15 seconds plus or minus 5 seconds. Operational impact is minor.

2. The SUT Analog Ear and Mouth (E&M) Signaling Type I trunking is not certified. The SUT's E&M trunks do not meet the GSCR requirements for DSN preempt signals. This is not a critical requirement for a PBX.

3. The SUT does not meet the American National Standards Institute (ANSI) T1.619 1992, ANSI T1.619a 1994, standards for ISDN ANSI T1.619a PRI National ISDN 2 (NI 2) protocol with unavailable resources, blocked precedence announcement. The SUT's ANSI T1.619a ISDN PRI trunkgroups using NI 2 protocol send a release complete message in lieu of a disconnect message with cause value 46 (unavailable resources); however, the user receives the correct treatment. The operational impact is minor.

4. The SUT does not support intra-switch call waiting on analog instruments. Inter-switch precedence call waiting is supported on all instrument types on the SUT. The operational impact is minor.

5. The SUT Attendant Console does not meet the following requirement: Automatic Recall of Attendant Console, "camp-on" feature as required in table 2-3, Attendant Features, GSCR, Para. 2.1.3. The operational impact is minor.

6. The SUT does not support route digit 5 or 6 for hotline services. This is not a critical requirement for a PBX. The operational impact is minor.

7. The SUT does not support the following unique Integrated Services Digital Network (ISDN) Basic Rate Interface (BRI) supplemental services as specified in the respective GSCR paragraphs listed below. There are currently no switches in the Defense Information Systems Network that support ISDN BRI supplemental services. The operational impact is none.

- Conference Calling. GSCR Para. 21.3.2

- User-to-User Signaling. GSCR Para. 21.3.3
- Call Hold. GSCR Para. 21.3.4
- Call Waiting. GSCR Para. 21.3.5
- Normal Call Transfer. GSCR Para. 21.3.6
- Explicit Call Transfer. GSCR Para. 21.3.7
- ISDN Call Deflection. GSCR Para. 21.3.8
- Preset Conference Calling. GSCR Para. 21.3.11

(b) VoIP. The SUT VoIP solution is comprised of the 1000M Option 11C (TDM) circuit switch and the C2 VG LAN as shown in figure 2-4. The C2 VG LAN infrastructure consists of the equipment listed in table 2-3. The results for the overall VoIP system and C2 VG LAN, as defined by the GSCR, appendix 3, are presented below.

1. VoIP System. GSCR, appendix 3, section A3.2, outlines the requirements for the VoIP system. The VoIP system requirements encompass end-to-end VoIP requirements (i.e., encompasses both the circuit switch and C2 VG LAN). The following paragraphs detail the results of the SUT VoIP solution.

a. Voice Quality. Per the GSCR, appendix 3, VoIP calls shall have an average Mean Opinion Score (MOS) score of at least 4.0 as measured over a 5-minute period. For intra-switch calls, the SUT VoIP solution measured MOS of 4.14. Inter-switch calls measured MOS of 4.30. This average was based a total of 50 intra-switch and inter-switch calls.

b. Codec. Per the GSCR, appendix 3, section A3.2.2, the G.711 Pulse-Code Modulation (PCM) codec was required and was met by the SUT VoIP solution.

c. Multi-Level Precedence and Preemption (MLPP). The GSCR, section 3, details the requirements for MLPP. All critical MLPP features and functions were met by the SUT VoIP system. There are no mature standards for MLPP over Internet Protocol; as a result the vendor is required to implement proprietary IP signaling.

d. Security. Security requirements per the GSCR, appendix 3, were verified using the Information Assurance Test Plan (IATP). Results of the security testing are reported in a separate test report generated by the DISA Information Assurance test personnel.

e. Network Management (NM). The GSCR, appendix 3, defines the overall NM requirements that the VoIP system must meet. The SUT VoIP system met these NM requirements. The switching system NM requirements per the GSCR, section 9, were also met by the SUT.

f. Synchronization. Synchronization is required for overall voice platforms to include VoIP systems. For the SUT VoIP solution, synchronization per the GSCR, section 11, was met. The SUT VoIP solution derived synchronization with line timing mode via traditional TDM-based interfaces (i.e., T1 or E1 digital).

g. Latency. The requirement for one-way system latency for the VoIP system is 60 milliseconds (msec) or less as averaged over any five-minute period. The latency requirement is measured from Internet Protocol (IP) handset to the egress trunk. The SUT average latency over 50 calls was measured at 50.1 msec.

h. Internet Protocol version 6 (IPv6). The GSCR, appendix 3 states that the C2 VG LAN components must be IPv6 capable. The VoIP components provided did not support this requirement. The operational impact is minor due to the fact that IPv6 is not currently implemented within the DSN and is not scheduled to be fully implemented until 2008.

2. Local Area Network. The SUT/Nortel LAN solution as shown in figure 2-4 and table 2-3 met the minimum interoperability requirements of the GSCR, appendix 3. The network consisted of two main components: the core switches and the access switches. The Nortel Networks LAN solution used several industry standards to provide resiliency and quality of service.

a. Design

(i) Delay. Per the GSCR, appendix 3, section A3.3.1.1, the one-way packet delay, the amount of time a packet takes to traverse the network, will be 5 msec or less, as measured over a 5-minute period. The averaged one-way delay measured in the SUT VoIP solution was 1.12 msec.

(ii) Jitter. Jitter buffer in all IP phones and on the Voice Gateway Media Card (VGMC), are set to hold one 20-msec packet. With a 40% bandwidth load, no jitter was measured.

(iii) Packet Loss. Network packet loss occurs when packets are sent, but not received at the final destination. The GSCR, appendix 3, states that LANs shall be engineered so the measured voice packet loss within the LAN shall not exceed 0.05% averaged over any 5-minute period. With 40% bandwidth load, the measured packet loss was 0.0005% for the Nortel Networks LAN infrastructure utilized.

(iv) Class of Service (CoS) and Quality of Service (QoS). The GSCR, appendix 3, outlines several methodologies to implement CoS and QoS. Differentiated Services Code Point (DSCP) at the Network Layer (L3) was employed. DSCP L3 signaling was set for 40 and voice was set at 46. The SUT/Nortel solution provides CoS by assignment of 802.1p/Q tags. These tags are implemented on all tagged trunks between the baystack and Passport 8600 core switch. Switches within the topology were configured with multiple Virtual LANs (VLANs) to separate data,

voice, and management traffic. The 802.1Q tags were used to uniquely identify and separate traffic as it passed through network connections. Voice VLAN traffic was assigned to a high priority queue, ensuring voice traffic took precedence over data traffic.

b. Traffic Engineering

(i) The SUT IP VGMC cards have a can only support 64 IP subscribers and still meet DSN redundancy requirements assured connectivity requirements. To determine the number of VGMCs per switch, the following formula must be used:

Total number of Voice Gateway Media Cards = total VoIP users / 64.

For redundancy purposes, the number of VGMCs shall be implemented on an n+1 basis (i.e., for 64 users, the system requires two VGMCs).

(ii) Core to Core**.** Redundant Inter-Switch Trunks, are implemented between the two core switches allowing the redundant transport of layer 2 VLAN traffic and layer 3 routed traffic while providing sub-second fail over.

(iii) Core to Access**.** Access switches require layer 2 and 3 redundancy to ensure traffic integrity. The GSCR, appendix 3, requires that LAN devices provide a redundancy protocol for the distribution and core devices. For this Layer 2 solution, Nortel implemented Split Multi Link Trunking (SMLT). SMLT will be used for sub-second Layer 2 recovery. Spanning Tree Protocol will not be supported and thus must be turned off on any existing edge to core links. For Layer 3, Virtual Router Redundancy Protocol (VRRP) will be used for sub-second failover.

(iv) Core to Firewall. Equal Cost Multi Path routed links using Open Shortest Path First is used to route traffic.

(v) Firewall to Access (Switch). VRRP (active-active) will be used for stateful firewall failover.

c. Management. The GSCR, appendix 3, requires that the vendor provide a management system to monitor the performance of the LAN portion of the VoIP system. Due to numerous third party systems and applications capable of performing this function, this requirement was verified via vendor letter of compliance. Signaling servers in figure 2-4 are used for Graphical User Interface only. These servers cannot be used for phone registration; they do not meet the requirements set forth by the GCSR, appendix 3. Phone registration must be accomplished on the VGMC.

d. Phones. The SUT VoIP phones that met all critical interoperability requirements were the i2002 and i2004 phones. Although the phones

are capable of shared access (i.e., same switch port is shared by Personal Computer (PC) and IP phone), the dedicated access was tested (separate ports for phones and PCs).

e. Scalability. The SUT can support 16 VGMC cards, which limits the maximum IP subscribers to 1024. The SUT VoIP solution tested consisted of two Passport 8600s, four Baystack 460-24T-PWR Switches (two as phone access switches and two as access switches for the C2 VG LAN to connect to the TDM switch), two Contivity 2600s (used as firewalls) as shown in figure 2-4. For implementation purposes, the C2 VG LAN can be scaled to meet the maximum number of IP phone subscribers as long as it's comprised of the equipment and software listed, and meets the traffic engineering constraints contained in the GSCR, appendix 3.

(2) Public Switched Telephone Network (PSTN). All interface ERs and FRs for the PSTN were met.

b. System Interoperability Results. Nortel Networks Succession DSN 1000M Cabinet, Succession DSN 1000M Chassis, and Succession DSN 1000 with Software Release 3.0 and product enhancement packages (includes Voice over Internet Protocol) are certified for joint use in the DSN as a PBX 1 in accordance with the requirements set forth in the GSCR. The overall operational impact of discrepancies is minor. The interoperability test summary is shown in table 2-4 and the detailed interoperability test status is shown table 2-5.

Table 2-4. SUT Interoperability Test Summary

DSN Trunk Interfaces			
Interface & Signaling	**Critical**	**Status**	**Remarks**
T1 CAS (DTMF, DP)	No	Certified	Met all CRs and FRs. Restoral from a local red alarm not met.[1] Operation impact is minor.
E1 CAS (DTMF, DP)	No (Europe only)	Not Tested	
T1 ISDN PRI NI 1/2 (ANSI T1.619a)	Yes	Certified	Met all CRs and FRs. NI2 Protocol provides a release complete message in lieu of a disconnect message for unavailable resources.[2] Operation impact is minor.
E1 ISDN PRI (Q.955.3)	No (Europe only)	Not Tested	
Analog E&M Type 1	No	Not Certified	Analog E&M services are not met.[3] Operation impact is minor.
DSN Line Interfaces			
Interface & Signaling	**Critical**	**Status**	**Remarks**
2-Wire Analog	Yes	Certified	Met all CRs and FRs. Does not support intraswitch call waiting.[4] Operation impact is minor.
ISDN BRI NI 1/2	Yes	Certified	Met all CRs and FRs.
Digital Proprietary	No	Certified	Met all CRs and FRs.
VoIP	No	Certified	Met all CRs and FRs. IPv6 not met.[5] Operation impact is minor.

Table 2-4. SUT Interoperability Test Summary (continued)

DSN Features and Capabilities (continued)			
Features and Capabilities	**Critical**	**Status**	**Remarks**
Common Features	No	Certified	Met all Common Features.
Attendant	No	Certified	Attendant service automatic recall not met.[6] Operation impact is minor.
Public Safety	No	Not Tested	
Preset Conferencing	No	Not Tested	
Nailed-up Connections	No	Not Tested	
PAT	No	Not Tested	
DSN hotline services	No	Not Certified	Hotline services not met.[7]
Network Management	No	Not Tested	
ISDN Services (EKTS)	No	Not Tested	
Synchronization	Yes	Certified	Met all CRs and FRs.
Reliability	Yes	Certified	Met all CRs and FRs.
Security[8]	Yes	Certified	Met all CRs and FRs.
VoIP System	No	Certified	
VoIP LANs	No	Certified	

Network Gateways				
	Interface & Signaling	**Critical**	**Status**	**Remarks**
PSTN	T1 CAS (DTMF, DP)	No	Certified	Met all CRs and FRs.
	E1 CAS (DTMF, DP)	No (Europe only)	Not Tested	
	T1 ISDN PRI NI 1/2	No	Certified	Met all CRs and FRs.
	E1 ISDN PRI (Q.931)	No (Europe only)	Not Tested	

Legend:

BRI - Basic Rate Interface
CAS - Channel Associated Signaling
CRs - Capability Requirements
DITSCAP - Department of Defense Information Technology Security and Accreditation Process
DP - Dial Pulse
DSN - Defense Switched Network
DTMF - Dual Tone Multi-Frequency
E1 - European Transmission Standard (2.048 Mbps)
EKTS - Electronic Key Telephone System
FRs - Feature Requirements
ISDN - Integrated Services Digital Network
JITC - Joint Interoperability Test Command
LAN - Local Area Network
LoC - Letters of Compliance
Mbps - Megabits per second
MLPP - Multi-Level Precedence and Preemption
NI 1/2 - National ISDN 1/2
PAT - Precedence Access Threshold
PRI - Primary Rate Interface
PSTN - Public Switched Telephone Network
SUT - System Under Test
T1 - Digital Transmission Link level 1 (1.544 Mbps)
VoIP - Voice over Internet Protocol

Notes:

1 The SUT does not meet the GSCR exchange requirements for restoral to service from a local red alarm. SUT takes 30 seconds to recover versus 15 seconds plus or minus 5 seconds. This is not critical requirement.
2 ISDN T1 PRI trunkgroups using NI2 protocol send a Release Complete Message in lieu of a Disconnect Message with Cause 46 (Unavailable Resources). This is not considered a critical requirement as the user still receives a Blocked Precedence Announcement.
3 Analog instruments do not provide intra-switch call waiting. The operational impact is minor.
5 Analog E&M Signaling Type 1 did not pass the DSN preempt signals as required by the GSCR for the four types of preemption. Analog E&M Signaling Type 1 is not certified for use in the DSN.
6 The SUT's attendant console does not support automatic recall of attendant. The operational impact is minor.
7 The SUT does not meet the GSCR exchange requirements for hotline services. Hotline services are not a critical requirement.

12. TEST AND ANALYSIS REPORT. No detailed test report was developed per the Program Manager's request. JITC distributes interoperability information via the JITC

Electronic Report Distribution (ERD) system, which uses Unclassified but Sensitive Internet Protocol Router Network (NIPRNet) e-mail. More comprehensive interoperability status information is available via the JITC System Tracking Program (STP). The STP is accessible by .mil/gov users on the NIPRNet at https://stp.fhu.disa.mil/. Test reports, lessons learned, and related testing documents and references are on the JITC Joint Interoperability Tool (JIT) at http://jit.fhu.disa.mil (NIPRNet), or http://199.208.204.125/ (SIPRNet). Information related to DSN testing is on the Telecom Switched Services Interoperability (TSSI) website at http://jitc.fhu.disa.mil/tssi.

Table 2-5. SUT Interoperability Requirements/Status

DSN Trunk Interfaces							
Interface	**Critical**	**Interface Status**	**GSCR Requirement Required (R) Conditional (C)**		**Reference**	**Test Results**	**Operational Impact**
T1 CAS	No	Certified	Trunking	Framing (R)	GSCR Sect. 7	Met	
				Line Code (R)	GSCR Sect. 7	Met	
				Signaling (R)	GSCR Sect. 5	Met	
				Alarms(R)	GSCR Sect. 2.5.7, 7.1.4 & 7.2.2	Not Met	Minor[1]
				Timing (R)	GSCR Sect. 11.1.1.2	Met	
				WWNDP (R)	GSCR Sect. 4.5.1	Met	
				Outpulsing digit formats (C)	GSCR Sect. 4.5.2	Met	
				Routing (C)	GSCR Sect. 4.2	Met	
				Trunk Groups(C)	GSCR Sect. 2.5.5 & 2.5.6	Met	
				Call Processing (R)	GSCR Sect. 4	Met	
				CAS to CCS trunk interworking (C)	GSCR Sect. 3.10	Not Tested	
				PCM-24/PCM-30 Interoperation(C)	GSCR Sect. 7.3	Not Tested	
				Direct Inward Dialing (C)	GSCR Sect. 2.3.2	Met	
			Voice	MOS (R)	CJCSI 6215.01B	Met	
				MLPP (R)	GSCR Sect. 3	Met	
				Secure calls (R)	CJCSI 6215.01B	Met	
			Facsimile	Analog: EIA/TIA-465-A (R)	JTA	Met	
				Digital: MIL-STD-188-161D (C)	JTA	Not Tested	
			Data	Modem (VBD) (R)	CJCSI 6215.01B	Met	
				56-kbps switched data (R: ISDN PRI only)	GSCR Sect. 3.10	Not Tested	
				64-kbps switched data (R: ISDN PRI only)	GSCR Sect. 3.10	Not Tested	
				NX56 synchronous BER (R: ISDN PRI only)	GSCR Sect. 3.10	Not Tested	
				NX64 synchronous BER (R: ISDN PRI only)	GSCR Sect. 3.10	Not Tested	
				Secure data (STE/STU-III) (R)	GSCR Sect. 3.10	Met	
			VTC	H.320 (C: ISDN PRI only)	JTA	Not Tested	

Table 2-5. SUT Interoperability Requirements/Status (continued)

DSN Trunk Interfaces							
Interface	**Critical**	**Interface Status**	**GSCR Requirement Required (R) Conditional (C)**		**Reference**	**Test Results**	**Operational Impact**
T1 ISDN PRI (ANSI T1.619a)	Yes	Certified	Trunking	Framing (R)	GSCR Sect. 7	Met	
				Line Code (R)	GSCR Sect. 7	Met	
				Signaling (R)	GSCR Sect. 5	Met	
				Alarms(R)	GSCR Sect. 2.5.7, 7.1.4 & 7.2.2	Not Met	Minor[1]
				Timing (R)	GSCR Sect. 11.1.1.2	Met	
				WWNDP (R)	GSCR Sect. 4.5.1	Met	
				Outpulsing digit formats (C)	GSCR Sect. 4.5.2	Met	
				Routing (C)	GSCR Sect. 4.2	Met	
				Trunk Groups(C)	GSCR Sect. 2.5.5 & 2.5.6	Met	
				Call Processing (R)	GSCR Sect. 4	Not Met	Minor[2]
				CAS to CCS trunk interworking (C)	GSCR Sect. 3.10	Not Tested	
				PCM-24/PCM-30 Interoperation(C)	GSCR Sect. 7.3	Not Tested	
				Direct Inward Dialing (C)	GSCR Sect. 2.3.2	Met	
			Voice	MOS (R)	CJCSI 6215.01B	Met	
				MLPP (R)	GSCR Sect. 3	Met	
				Secure calls (R)	CJCSI 6215.01B	Met	
			Facsimile	Analog: EIA/TIA-465-A (R)	JTA	Met	
				Digital: MIL-STD-188-161D (C)	JTA	Not Tested	
			Data[2]	Modem (VBD) (R)	CJCSI 6215.01B	Met	
				56-kbps switched data (R: ISDN PRI only)	GSCR Sect. 3.10	Met	
				64-kbps switched data (R: ISDN PRI only)	GSCR Sect. 3.10	Met	
				NX56 synchronous BER (R: ISDN PRI only)	GSCR Sect. 3.10	Met	
				NX64 synchronous BER (R: ISDN PRI only)	GSCR Sect. 3.10	Met	
				Secure data (STE/STU-III) (R)	GSCR Sect. 3.10	Met	
			VTC	H.320 (C: ISDN PRI only)	JTA	Met	

Table 2-5. SUT Interoperability Requirements/Status (continued)

DSN Trunk Interfaces							
Interface	**Critical**	**Interface Status**	**GSCR Requirement Required (R) Conditional (C)**		**Reference**	**Test Results**	**Operational Impact**
E&M TYPE 1	No	Not Certified	Trunking	Framing (R)	GSCR Sect. 7	Not Tested	
				Line Code (R)	GSCR Sect. 7	Not Tested	
				Signaling (R)	GSCR Sect. 5	Met	
				Alarms(R)	GSCR Sect. 2.5.7, 7.1.4 & 7.2.2	Not Met	Minor[3]
				Timing (R)	GSCR Sect. 11.1.1.2	Not Tested	
				WWNDP (R)	GSCR Sect. 4.5.1	Not Tested	
				Outpulsing digit formats (C)	GSCR Sect. 4.5.2	Met	
				Routing (C)	GSCR Sect. 4.2	Not Tested	
				Trunk Groups(C)	GSCR Sect. 2.5.5 & 2.5.6	Not Tested	
				Call Processing (R)	GSCR Sect. 4	Met	
				CAS to CCS trunk interworking (C)	GSCR Sect. 3.10	Not Tested	
				PCM-24/PCM-30 Interoperation(C)	GSCR Sect. 7.3	Not Tested	
				Direct Inward Dialing (C)	GSCR Sect. 2.3.2	Met	
			Voice	MOS (R)	CJCSI 6215.01B	Not Tested	
				MLPP (R)	GSCR Sect. 3	Not Met	Minor[4]
				Secure calls (R)	CJCSI 6215.01B	Not Tested	
			Facsimile	Analog: EIA/TIA-465-A (R)	JTA	Not Tested	
				Digital: MIL-STD-188-161D (C)	JTA	Not Tested	
			Data[2]	Modem (VBD) (R)	CJCSI 6215.01B	Not Tested	
				56-kbps switched data (R: ISDN PRI only)	GSCR Sect. 3.10	Not Tested	
				64-kbps switched data (R: ISDN PRI only)	GSCR Sect. 3.10	Not Tested	
				NX56 synchronous BER (R: ISDN PRI only)	GSCR Sect. 3.10	Not Tested	
				NX64 synchronous BER (R: ISDN PRI only)	GSCR Sect. 3.10	Not Tested	
				Secure data (STE/STU-III) (R)	GSCR Sect. 3.10	Not Tested	
			VTC	H.320 (C: ISDN PRI only)	JTA	Not Tested	

Table 2-5. SUT Interoperability Requirements/Status (continued)

DSN Line Interfaces							
Interface	**Critical**	**Interface Status**	**GSCR Requirement Required (R) Conditional (C)**		**Reference**	**Test Results**	**Operational Impact**
2-Wire Analog	Yes	Certified	Access	DN Identification (R)	GSCR Sect 2.1.1	Met	
				Line signaling (C)	GSCR Sect 5.2	Met	
				Alerting Signals and Tones (C)	GSCR Sect 5.5	Met	
				WWNDP(R)	GSCR Sect. 4.5	Met	
				Call Processing (C)	GSCR Sect. 4.4	Met	
				Call Treatments (R)	GSCR Sect. 4.1	Met	
				2W user access (R)	GSCR Sect 4.3.3	Met	
				Analog busy/idle (R)	GSCR Sect 4.3.4.1	Met	
			Voice	MOS (R)	CJCSI 6215.01B	Met	
				MLPP (R)	GSCR Sect. 3.4.3, 3.9	Met	
				Secure calls (R)	CJCSI 6215.01B	Met	
			Facsimile	Analog: EIA/TIA-465-A (R)	JTA	Met	
				Digital: MIL-STD-188-161D (C)	JTA	Not Tested	
			Data	Modem (VBD) (R)	CJCSI 6215.01B	Met	
				Secure data (STE/STU-III) (R)	GSCR Sect. 3.10	Met	
			VTC	H.320 (C: ISDN BRI only)	JTA	Not Tested	

Table 2-5. SUT Interoperability Requirements/Status (continued)

DSN Line Interfaces (continued)							
Interface	**Critical**	**Interface Status**	**GSCR Requirement Required (R) Conditional (C)**		**Reference**	**Test Results**	**Operational Impact**
ISDN BRI NI 1/2	Yes	Certified	Access	DN Identification (R)	GSCR Sect 2.1.1	Met	
				Line signaling (C)	GSCR Sect 5.2	Met	
				Alerting Signals and Tones (C)	GSCR Sect 5.5	Met	
				WWNDP(R)	GSCR Sect. 4.5	Met	
				Call Processing (C)	GSCR Sect. 4.4	Met	
				Call Treatments (R)	GSCR Sect. 4.1	Met	
			Voice	MOS (R)	CJCSI 6215.01B	Met	
				MLPP (R)	GSCR Sect. 3.4.3, 3.9	Met	
				Secure calls (R)	CJCSI 6215.01B	Met	
			Data	Modem (VBD) (R)	CJCSI 6215.01B	Met	
				56-kbps switched data (R))	GSCR Sect. 3.10	Met	
				64-kbps switched data (R)	GSCR Sect. 3.10	Met	
				NX56 synchronous BER (R)	GSCR Sect. 3.10	Met	
				NX64 synchronous BER (R)	GSCR Sect. 3.10	Met	
				Secure data (STE/STU-III) (R)	GSCR Sect. 3.10	Met	
			VTC	H.320 (C)	JTA	Met	

Table 2-5. SUT Interoperability Requirements/Status (continued)

DSN Line Interfaces (continued)							
Interface	**Critical**	**Interface Status**	**GSCR Requirement Required (R) Conditional (C)**		**Reference**	**Test Results**	**Operational Impact**
Digital Proprietary	No	Certified	Access	DN Identification (R)	GSCR Sect 2.1.1	Met	
				Line signaling (C)	GSCR Sect 5.2	Met	
				Alerting Signals and Tones (C)	GSCR Sect 5.5	Met	
				WWNDP(R)	GSCR Sect. 4.5	Met	
				Call Processing (C)	GSCR Sect. 4.4	Met	
				Call Treatments (C)	GSCR Sect. 4.1	Met	
			Voice	MOS (R)	CJCSI 6215.01B	Met	
DSN Features & Capabilities							
Features/ Capabilities	**Critical**	**Status**	**GSCR Requirement Required (R) Conditional (C)**		**Reference**	**Test Results**	**Operational Impact**
Common Features	No	Certified	Selective call rejection (C)		GSCR Sect. 2.1.2	Not Tested	
			Denied originating service (C)		GSCR Sect. 2.1.3	Not Tested	
			Code restriction and diversion (C)		GSCR Sect. 2.1.4	Met	
			Three-way calling (C)		GSCR Sect. 2.1.5	Met	
			Add-on transfer and conference calling (C)		GSCR Sect. 2.1.6	Met	
			Call forwarding (C)		GSCR Sect. 2.1.7	Met	
			Call pick-up (C)		GSCR Sect. 2.1.8	Met	
			Call waiting (C)		GSCR Sect. 2.1.9	Not Met	Minor[5]
Attendant	No	Certified	Initiate all precedence levels (C)		GSCR Sect. 2.2.1	Met	
			Visual display (C		GSCR Sect. 2.2.2	Met	
			Override class of service (C)		GSCR Sect. 2.2.3	Met	
			Override busy line (C)		GSCR Sect. 2.2.4	Met	
			Call deflection (C)		GSCR Sect. 2.2.5	Met	
			Auto recall (C)		GSCR Sect. 2.2.6	Not Met	Minor[6]
			Waiting queue (C)		GSCR Sect. 2.2.7	Met	
Public Safety	No	Not Tested	911 (C)		GSCR Sect. 2.4.1	Not Tested	
			Trace of terminating calls (C)		GSCR Sect. 2.4.2	Not Tested	
			Outgoing call trace (C)		GSCR Sect. 2.4.3	Not Tested	
			Tandem call trace (C)		GSCR Sect. 2.4.4	Not Tested	
			Trace of a call in progress (C)		GSCR Sect. 2.4.5	Not Tested	

Table 2-5. SUT Interoperability Requirements/Status (continued)

DSN Features & Capabilities (continued)						
Features/ Capabilities	**Critical**	**Status**	**GSCR Requirement Required (R) Conditional (C)**	**Reference**	**Test Results**	**Operational Impact**
Preset Conferencing	No	Not Tested	Support 10 bridges; 1 originator and 20 conferees (C)	GSCR Sect. 2.1.6	Not Tested	
			Assign up to 20 address numbers per bridge (C)	GSCR Sect. 2.6	Not Tested	
			Use KXX codes for bridge access (C)	GSCR Sect. 2.6	Not Tested	
			Conference notification recorded announcement (C)	GSCR Sect. 2.6.1	Not Tested	
			Auto retrial and alternate address (C)	GSCR Sect. 2.6.2	Not Tested	
			Bridge release (C)	GSCR Sect. 2.6.3	Not Tested	
			Lost connection (C)	GSCR Sect. 2.6.4	Not Tested	
			Secondary conferencing (C)	GSCR Sect. 2.6.5	Not Tested	
			Address translation (C)	GSCR Sect. 2.7	Not Tested	
Nailed-Up Connections	No	Not Tested	Between any two like terminations (C)	GSCR Sect. 2.8	Not Tested	
			PCM-24 and PCM-30, both CAS and CCS (C)	GSCR Sect. 2.8	Not Tested	
			Supervision passed end-to-end for A/D or D/A (C)	GSCR Sect. 2.8	Not Tested	
			Monitored and auto reconfigure (C)	GSCR Sect. 2.8	Not Tested	
			Support at least 10% of circuits as nailed-up (C)	GSCR Sect. 2.8	Not Tested	
			Non-preemptable (C)	GSCR Sect. 2.8	Not Tested	
PAT	No	Not Tested	Classmark for/not for PAT screening (C)	GSCR Sect. 2.11.1	Not Tested	
			7 PAT mechanisms (C)	GSCR Sect. 2.11.1	Not Tested	
			Outgoing call screening (C)	GSCR Sect. 2.11.1.1	Not Tested	
			Functional structure (C)	GSCR Sect. 2.11.1.2	Not Tested	
			Overflow Process (c)	GSCR Sect. 2.11.1.3	Not Tested	
			Simultaneous calls limitation (C)	GSCR Sect. 2.11.1.4	Not Tested	
			Decrementing call-in-progress count (C)	GSCR Sect. 2.11.1.5	Not Tested	
			Call treatment (C)	GSCR Sect. 2.11.1.6	Not Tested	
			Queuing (C)	GSCR Sect. 2.11.1.7	Not Tested	
			Attendant calls (C)	GSCR Sect. 2.11.1.8	Not Tested	
			Op measurement registers (C)	GSCR Sect. 2.11.1.9	Not Tested	
			Maintenance and Administration of thresholds (C)	GSCR Sect. 2.11.1.10	Not Tested	
DSN hotline services	No	Not Certified	Hotline restrictions (C)	GSCR Sect. 2.12	Not Met	Minor[7]
			Auto initiate (C)	GSCR Sect. 2.12	Met	
			Analog and digital (C)	GSCR Sect. 2.12	Not Met	Minor[7]
			Subscription basis (C)	GSCR Sect. 2.12	Not Tested	
			Protected hotline calling (C)	GSCR Sect. 2.12.1-4	Not Met	Minor[7]
			WWNDP interoperable (C)	GSCR Sect. 2.12.5	Not Met	Minor[7]

Table 2-5. SUT Interoperability Requirements/Status (continued)

DSN Features & Capabilities (continued)							
Features/ Capabilities	**Critical**	**Status**	**GSCR Requirement Required (R) Conditional (C)**		**Reference**	**Test Results**	**Operational Impact**
Network Management	No	Not Tested	Interfaces (C)		GSCR Sect. 9.1	Met	
			Measurements and data generation (C)		GSCR Sect. 9.2	Met	
			Fault management (C)		GSCR Sect. 9.3	Met	
			Configuration management (C)		GSCR Sect. 9.4	Met	
			Accounting management (C)		GSCR Sect. 9.5	Met	
			Performance management (C)		GSCR Sect. 9.6	Met	
			NM controls (C)		GSCR Sect. 9.7	Met	
			Remote access (C)		GSCR Sect. 9.8	Met	
ISDN services	No	Not Tested	EKTS (C)		GSCR Sect. 10, table 10-3	Met	
Synchronization	Yes	Certified	Line timing mode (C)		GSCR Sect. 11.1.1.2	Met	
			Internal Stratum 4 (R)		GSCR Sect. 11.1.2.2	Met	
Reliability	Yes	Certified	GR-512-CORE (C)		GSCR Sect. 12	Met	
Security[1]	Yes	Certified	DITSCAP (R)		DODI 8100.3	Met	
VoIP System	No	Not Tested	MOS 4.0 or better(R)		GSCR App. 3	Met	
			G.711 PCM Codec (R)		GSCR App. 3	Met	
			Security IAW DITSCAP (R)		GSCR App. 3	Met	
			NM(R)		GSCR App. 3	Met	
			Line timing(R)		GSCR App. 3	Met	
			Internal Clock(R)		GSCR App. 3	Met	
			Latency @60 msec or less(R)		GSCR App. 3	Met	
			IPv6 capable(R)		GSCR App. 3	Not Met	Minor[8]
LANs	No	Not Tested	LAN parameters(R)		GSCR App. 3	Met	
			CoS /QoS(R)		GSCR App. 3	Met	
			VLANs(R)		GSCR App. 3	Met	
			IEEE Stds. Conformance(R)		GSCR App. 3	Met	
			.99999 availability(R)		GSCR App. 3	Met	
			Modular devices(R)		GSCR App. 3	Met	
			2 sec. link restoral(R)		GSCR App. 3	Met	
			LAN NM(R)		GSCR App. 3	Met	
			Traffic Engineering(R)		GSCR App. 3	Met	
Network Gateway							
Gateway	Critical	Interface Status	GSCR Requirement Required (R) Conditional (C)		Reference	Test Results	Operational Impact
PSTN	No	Certified	Trunking	Positive Identification Control (C)	CJCSI 215.1B	Met	
				On-Netting (C)	CJCSI 215.1B	Met	
				Off-Netting (C)	CJCSI 215.1B	Met	

Table 2-5. SUT Interoperability Requirements/Status (continued)

Legend:

2W	- 2 Wire
A/D	- Analog to Digital Conversion
AMA	- Automated Message Accounting
ANSI	- American National Standards Institute
App.	- Appendix
BER	- Bit Error Ratio
BRI	- Basic Rate Interface
C	- conditional
CAS	- Channel Associated Signaling
CCS	- Common Channel Signaling
CJCS	- Chairman Joint Chiefs of Staff
CJCSI	- CJCS Instruction
CoS	- Class of Service
D/A	- Digital to Analog Conversion
DISN	- Defense Information System Network
DITSCAP	- Department of Defense Information Technology Security and Accreditation Process
DN	- Directory Number
DSN	- Defense Switched Network
E&M	- Ear and Mouth
EIA	- Electronics Industries Alliance
EKTS	- Electronic Key Telephone System
GSCR	- Generic Switching Center Requirements
H.320	- ITU Std. for narrowband VTC
IAW	- In accordance with
IEEE	- Institute of Electrical and Electronics Engineers, Inc.
IPv4	- Internet Protocol version 4
IPv6	- Internet Protocol version 6
ISDN	- Integrated Services Digital Network
JTA	- Joint Technical Architecture
kbps	- kilobits per second
KXX	- K = any number 2-8, X = any number 1-9
LAN	- Local Area Network
Mbps	- Megabits per second
MIL-STD	- Military Standard
MLPP	- Multi-Level Precedence & Preemption
MOS	- Mean Opinion Score
Msec	- Milliseconds
NI 1/2	- National ISDN Std. 1 or 2
NM	- Network Management
NX56	- Data format restricted to multiples of 56 kbps
NX64	- Data format restricted to multiples of 64 kbps
Op	- Operations
PAT	- Precedence Access Threshold
PCM	- Pulse Code Modulation
PRI	- Primary Rate Interface
PSTN	- Public Switched Telephone Network
QoS	- Quality of Service
R	- Required
Sec.	- Seconds
Sect.	- Section
SS7	- Signaling System 7
Std.	- Standard
STE	- Secure Terminal Equipment
STU	- Secure Terminal Unit
STU-III	- STU 3rd generation
SUT	- System Under Test
T1	- American Transmission Std. (1.544 Mbps)
T1.619a	- SS7 and ISDN Signaling Std. For T1
TIA	- Telecommunications Industry Association
VBD	- Variable bit data
VLAN	- Virtual LAN
VoIP	- Voice over Internet Protocol
VTC	- Video Teleconferencing
WWNDP	- Worldwide Numbering and Dialing Plan

Notes:

1. The SUT does not meet the GSCR exchange requirements for restoral to service from a local red alarm. SUT takes 30 seconds to recover versus 15 seconds plus or minus 5 seconds. This is not critical requirement.
2. ISDN T1 PRI trunkgroups using NI 2 protocol send a Release Complete Message in lieu of a Disconnect Message with Cause 46 (Unavailable Resources). This is not considered a critical requirement as the user still receives a Blocked Precedence Announcement.
3. It takes approximately 30 seconds for a PCM-24 interface on the SUT to recover from a red alarm. The GSCR requirement for recovery from a local red alarm is 15 seconds plus or minus 5 seconds. Operational impact is minor.
4. Analog E&M Signaling Type 1 did not pass the DSN preempt signals as required by the GCSR for the four types of preemption. Analog E&M Signaling Type 1 is not certified for use in the DSN.
5. Analog instruments do not provide intra-switch call waiting. The operational impact is minor.
6. The SUT's attendant console does not support automatic recall of attendant. The operational impact is minor.
7. The SUT did not meet IPv6 requirements. The operational impact is minor. IPv6 is currently not used in the DSN and the DISN is scheduled to be completely converted from IPv4 to IPv6 in 2008.
8. The SUT does not meet the GSCR exchange requirements for hotline services. Hotline services are not a critical requirement.

Table 3-1. SUT Product Enhancement Packages

Core Software Patch List		
Patch ID Number	**CR Number**	**Description**
MPLR17817	Q00758895	DSN: Tandem ATVN MCDN trunk second call fails after preemption
MPLR18070	Q00786849	Preemption of a partially dialed routine precedence call
MPLR18220	Q00802114	DSN: Bug 30 messages during tandem calls
MPLR18263	Q00817316	Option 11C switch reinitializes due to CDR-Q procedure
MPLR18302	Q00841477	NI 2 DID Tandem to ATVN
MPLR18622	Q00888789	This patch was developed to suppress password information on the switches in LD 22.

Legend:
ATVN - Autovon
CDR-Q - Call Detail Record - Queue
CR - Call Report
DID - Direct Inward Dial
DSN - Defense Switched Network
ID - Identification
ISDN - Integrated Services Digital Network
LD - Overlay
MCDN - Meridian Customer Defined Network
MPLR - Meridian Patch Library Reference
NI 2 - National ISDN 2
SUT - System Under Test