DEPARTMENT OF DEFENSE VOICE NETWORKS
GENERIC SWITCHING CENTER REQUIREMENTS (GSCR)

8 SEP 2003

ERATA Change 1, 1 March 2005

DEPARTMENT OF DEFENSE VOICE NETWORKS
GENERIC SWITCHING CENTER REQUIREMENTS (GSCR)

This document specifies technical requirements for a telecommunications switch to be connected to the Defense Switched Network in support of voice, video, and data services. It conforms to Public Law 107-3 14 and is the basis for any future telecommunications switch acquisition, independent of the technology.

It is approved for release to authorized government and commercial communities.

Approved by: _____

Priscilla E. Guthrie
Deputy Assistant Secretary of Defense
(Deputy CIO)

Dated: _____

CHANGE SUMMARY SHEET

This "Change" notice is "Change 1, 1 March 2005" to the Department Of Defense Voice Networks Generic Switching Center Requirements (GSCR) Dated Sep 8, 2003.

Reason For Change	Page Nos.	Paragraph(s)
Administrative/format	Cover	Title
Administrative/format	i thru xvii	Table Of Contents
Administrative (Adds date to DODI 8100.3)	2	1.2
Administrative/format (Syntax correction)	3	1.4
Administrative/format (Statement conflict removed on use of RLM)	8	1.6.4
Administrative/format (Clarification)	9	Figure 1-2
Administrative/format (Clarification) OCONUS-ETSI footnote under table	11	Table 1-3
Administrative ISDN-BRI ANSI T1-619a's PBX1 changed to "C" conditional	11	Table 1-3
Administrative/format (Clarification) VOIP reference Appendix	12	1.6.6
Administrative/format (Clarification)	19	2.1.8.1
Administrative/format (Font)	22	2.2.6
Administrative text added to last sentence: "data, or packet data,"	24	2.3.3
Administrative (CCB Approved) PBX1 (BRI made Conditional)	24	2.3.3
Administrative/format (Syntax correction)	25	2.3.4
Administrative/format (Eliminate redundant info)	40 thru42	2.13 thru 2.13.5 inclusive
Administrative (CCB Approved) PBX1 (BRI made Conditional)	57 thru 59	3.6 thru 3.6.5 inclusive
Administrative/format (Clarification)	63,64	Table 3-6
Administrative/format (Syntax)	65	3.8.1.3
Administrative/format (Para Format) header placed on p.71	70,71	3.8.7
Administrative (Clarification) LFB (Conditional)	79	3.9.3
Administrative/format (Clarification) PBX2 (Conditional)	93	4.1.2.1
Administrative (Clarification) Class Of Service	94	4.1.6
Administrative/format (Para Format)	95	4.3.3
Administrative (Clarification) Route Code (Conditional)	109	Table 4-8
Administrative (Clarification) PBX2 (Conditional)	139 thru 143	5.7.1.1 thru 5.7.1.4.5
Administrative/format (Para Format)	144,145	5.7.1.4.6
Administrative/format - table header placed on	148,149,150	Table 6-4/Table 6-5

p.149		
Administrative/format	154,155	Table 6-12
Administrative (Clarification) IDLC	164,165	7.5,7.5.1
Administrative (Clarification) or edit was made	185	9.7.4
Administrative (CCB Approved) PBX1 (BRI made Conditional)	188,189	Table10-1/Table 10-2
Administrative (Clarification)	197	12.1
Administrative/format - why edit format?	198	12.2.5
Administrative (CCB Approved) PBX1 (BRI made Conditional)	213	2.3.3
Administrative (CCB Approved) Adds Appendix 3 (VOIP)	259 thru 300	A3.1 – A3.4 w/Enclosures
Administrative (CCB Approved) Adds Appendix 4 (EC)	301 thru 310	A4.1 thru A4.6.3
Administrative (CCB Approved) Adds Appendix 5 (OC3)	311 thru 318	A5.1 thru A5.5.7
Administrative (CCB Approved) Adds Appendix 6 (IAS)	319 thru 328	A6.1 thru A6.4.7
Administrative (CCB Approved) Adds Appendix 7 (CPE)	329 thru 338	A7.1 thru 7.6.5
Administrative (CCB Approved) Adds Appendix 8 (VTC)	339 thru 345	A8.1 thru A8.7
Administrative (CCB Approved) Adds Appendix 9 (NE)	346 thru 352	A9.1 thru A9.6

Table of Contents

SECTION 1 – Introduction 1
1.1 Purpose 1
1.2 Role of GSCR in Implementing Public Law 107-3 14.. 1
1.3 Requirements 2
1.3.1 Minimum Requirements 3
1.3.2 Conditional Requirements.. 3
1.4 Applicability 3
1.5 Specification language 3
1.6 DSN System Overview 4
1.6.1 DoD C2 Users 4
1.6.2 DSN Support to Telephony (Voice, Video, Data) Users.. 6
1.6.3 DSN Support to C2 Users over the Full Range of Stress Levels.. 7
1.6.4 DSN Architecture 7
1.6.5 DSN Backbone Switches 11
1.6.6 Military/Agency Installation Configuration and Switch Types.. 12
1.6.6.1 End Office 13
1.6.6.2 Small End Office 13
1.6.6.3 Private Branch Exchange 14
1.6.7 Remote Switching Unit.. 14
1.6.8 Deployable Voice Exchange 14
SECTION 2 - Capabilities and Features 15
2.0 Introduction 15
2.1 Features Common to Single Users and Business Customers.. 15
2.1.2 CLASS SM Feature: Selective Call Rejection.. 15
2.1.3 Denied Originating Service.. 15
2.1.4 Code Restriction and Diversion 16
2.1.5 Call Waiting Features 16
2.1.5.1 Call Waiting (CW) 16
2.1.5.2 Cancel Call Waiting 16
2.1.6 Three-Way Calling (TWC) 16
2.1.7 Add-On Transfer and Conference Calling Features 17
2.1.7.1 Call Transfer Individual - All Calls 17
2.1.7.2 Call Transfer - Internal Only 17
2.1.7.3 Call Transfer -Individual - Incoming Only/Add-on Consultation Hold-Incoming Only 18
2.1.7.4 Call Transfer – Outside 18
2.1.7.5 Call Transfer-Add-on to Fully Restricted Station.. 18
2.1.7.6 Call Transfer Attendant 18
2.1.7.7 Call Hold 19
2.1.7.8 Conference Calling - Six Way Station Controlled.. 19
2.1.8 Call Forwarding Features And Call Forwarding Subfeatures.. 19
2.1.8.1 Call Forwarding Variable 19
2.1.8.2 Call Forwarding Busy Line (CFBL) 19
2.1.8.3 Call Forwarding - Don't Answer - All Calls 20

2.1.8.4 CLASS[SM] Feature: Selective Call Forwarding 20
2.1.9 Call Pick-Up Features 20
2.1.9.1 Call Pick-Up 20
2.1.9.2 Directed Call Pick-Up 21
2.1.9.3 Directed Call Pick-Up without Barge-In 21
2.2 Attendant Features 21
2.2.1 Precedence and Preemption 21
2.2.2 Call Display 21
2.2.3 Class of Service Override 22
2.2.4 Busy Override and Busy Verification.. 22
2.2.5 Night Service 22
2.2.6 Automatic Recall of Attendant 22
2.2.7 Calls in Queue to the Attendant 22
2.3 Customer Access Interfaces 23
2.3.1 PBX Line 23
2.3.2 Direct Inward Dialing (DID) 24
2.3.3 National ISDN 1/2 Basic Access 24
2.3.4 National ISDN 1/2 Primary Access. 25
2.3.5 Analog Line 25
2.4 Public Safety Features 25
2.4.1 Basic Emergency Service (91 1). 25
2.4.2 Tracing of Terminating Calls.. 25
2.4.3 Outgoing Call Tracing. 26
2.4.4 Tandem Call Trace 26
2.4.5 Trace of A Call in Progress.. 26
2.5 Trunk, Line, and Special Service Circuit Service Test Features 26
2.5.1 Local Office Test Lines 26
2.5.1.1 100-Type Test Line 26
2.5.1.2 101-Type Test Line 27
2.5.1.3 102-Type Test Line.. 27
2.5.1.4 105-Type Test Line 27
2.5.1.5 Synchronous Test Line 27
2.5.1.6 Non-synchronous Test Line.. 27
2.5.1.7 Permanent Busy Test Line.. 27
2.5.1.8 1 OS-Type Test Line 27
2.5.2 Outside Plant Test Lines 27
2.5.2.1 Dialable Cable Pair Locator Tone.. 27
2.5.2.2 DTMF Station Test Circuit 28
2.5.3 Test Incoming Trunks in Tandem or Local State 28
2.5.4 Manual Testing 28
2.5.4.1 Manual Test of Line 28
2.5.4.2 Manual Test of Trunks.. 28
2.5.5 Trunk Group - Remove from Service (Make Busy) 28
2.5.6 Trunk Group - Restore to Service (Make Idle) 28
2.5.7 Carrier Group Alarm (CGA). 28
2.5.7.1 Software Carrier Group Alarm 29

2.6 Preset Conferencing 29
2.6.1 Conference Notification Recorded Announcement 30
2.6.2 Automatic Retrial and Alternate Address 30
2.6.3 Bridge Release 31
2.6.4 Lost Connection to Conferee or Originator 31
2.6.5 Secondary Conferencing 31
2.7 Address Translation 31
2.8 Nailed-Up Connections 32
2.9 Assured Dial Tone 32
2.10 DSN Remote Switch Unit (RSU) Requirements 33
2.10.1 Introduction 33
2.10.2 Normal Operating Condition Connected To The Host.. 33
2.10.3 Degraded Operating Conditions 33
2.10.3.1 Stand-Alone Condition 33
2.10.3.2 Partial Stand-Alone Condition 34
2.11 Control of Precedence Calls 34
2.11.1 Precedence Access Threshold (PAT) 34
2.11.1.1 Call Screening 34
2.11.1.2 Functional Structure.. 35
2.11.1.3 Simultaneous Calls Limitation.. 35
2.11.1.4 Overflow Process 36
2.11.1.5 Decrementing the Calls-In-Progress Count 36
2.11.1.6 Call Treatment 37
2.11.1.7 Queuing 37
2.11.1.8 Attendant Calls 37
2.11.1.9 Operational Measurement Registers 38
2.11.1.10 Maintenance and Administration of Thresholds.. 38
2.12 DSN Hotline Service 38
2.12.1 Protected Hotline Calling 39
2.12.2 Pair Protected Hotline Calling 39
2.12.3 Unprotected Hotline Receiving 39
2.12.4 Protected Hotline Receiving 39
2.12.5 User Interoperability 39
SECTION 3 – Multi-Level Precedence and Preemption (MLPP). 43
3.0 Introduction.. 43
3.1 Multi-Level Precedence and Preemption (MLPP) Overview.. 43
3.1.1 Description 43
3.1.2 Precedence Levels 44
3.1.3 Announcements 44
3.2 Preemption in the Network 47
3.2.1 Network Facilities Active With Lower Precedence Calls 47
3.2.1.1 CANCEL to (CANT) / CANCEL from (CANF). 47
3.2.2 Network Facilities Active With Equal or Higher Precedence Call.. 47
3.2.3 MLPP Trunk Selection (Hunting) 47
3.2.3.1 Hunt Sequence for Trunks 48
3.2.3.1.1 ROUTINE Calls 48

3.2.3.1.2 Precedence Calls Above ROUTINE 48
3.2.4 MLPP Inter-working with Other Networks.. 52
3.2.4.1 Calls From non-MLPP Networks 52
3.2.4.2 Precedence Calls to Non-MLPP Networks.. 52
3.3 Precedence Call Diversion.. 52
3.4 Preempt Signaling 53
3.4.2 Primary Rate Interface (PRI) 56
3.4.3 Common Channel Signaling Number 7 (CCS7). 56
3.5 Analog Line MLPP 57
3.5.1.1 Line Active With A Lower Precedence Call 57
3.5.1.2 Line Active With An Equal or Higher Precedence Call Above Routine.. 57
3.6 ISDN MLPP Basic Rate Interface (BRI) 57
3.6.1 General Description 57
3.6.2 Single B-Channel, Single Appearance, Single Directory Number (DN). 58
3.6.2.1 Line Active With A Lower Precedence Call 58
3.6.2.2 Line Active With An Equal or Higher Precedence Call.. 58
3.6.3 Single B-Channel, Multiple Appearances, Single Directory Number (DN). 58
3.6.4 Two (2) B-Channels, Multiple Appearances, Single Directory Number (DN) 59
3.7 ISDN MLPP Primary Rate Interface (PRI) 60
3.7.3 Disconnect Message Information Cause Values.. 62
3.7.4 Signal Information Element 63
3.7.5 ANSI T 1.619a Setup Message Called Party Number Format 63
3.8 MLPP Interactions with Common Optional Station Features and Services.. 65
3.8.1 Precedence Call Waiting 65
3.8.1.1 Busy with higher precedence call 65
3.8.1.2 Busy with equal precedence call 65
3.8.1.3 Busy with lower precedence call 65
3.8.1.4 No Answer.. 66
3.8.2 Call Forwarding 66
3.8.2.1 Call Forwarding at a Busy Station 66
3.8.2.2 Call Forwarding - No Reply at Called Station.. 67
3.8.4 Call Hold.. 67
3.8.5 Three-Way Calling (TWC) 70
3.8.6 Call Pick-Up 70
3.8.7.1 Conference Precedence Level 71
3.8.8 Multiline Hunt Service 71
3.8.9.1 Definition of Terms.. 72
3.8.9.2 Feature Requirements 75
3.8.9.2.1 COI Screening treatment for Originating Call Requests 75
3.8.9.2.2 COI Screening treatment for Terminating Call Requests 76
3.9 MLPP Common Channel Signaling Number 7 (CCS7) 77
3.9.1 General Description 77
3.9.2 Definitions 78
3.9.4.1 Actions Required at Originating Exchange 80
3.9.4.2 MLPP CCS7 Transaction Capability Application Part (TCAP) -Definitions and Functions of Transaction Capability (TC) Operations, Parameters, and Error Codes..... 81

3.9.4.2.1 Parameters 81
3.9.6 DSN MLPP CCS7 Initial Address Message (IAM) Called Party Number Format 82
3.10 Channel associated signaling to Common channel signaling (CAS-to-CCS) trunk inter-working in a mixed media network 83
3.11 MLPP Interactions with Electronic Key Telephone Systems (EKTS) Features.. 88
3.11.1 Electronic Key Telephone Systems (EKTS) 88
3.11.1.1 Call Appearances 88
3.11.1.2 Hold 88
3.11.1.3 DN Bridging 88
3.11.1.4 Intercom Calling 88
3.11.1.5 Abbreviated Or Delayed Ringing Treatment On Incoming Calls 88
3.11.1.6 Bridged Call Exclusion (BCE) 89
3.11.1.7 Non-ISDN Users 89
3.12 Backward Compatibility 89
3.12.1 Precedence Parameter 89
3.13 Network Management Manual Controls 90
3.14 Data Collection 90
SECTION 4 - Call Processing 92
4.0 Introduction 92
4.1 Call Treatments 92
4.1.1 Origination Treatment 92
4.1.1.1 Originating Busy 93
4.1.2.1 Busy or Idle Status.. 93
4.1.3 Release Treatment 93
4.1.4 Interruption Treatment 93
4.1.5 Connections 94
4.1.6 Class of Service 94
4.2 Primary and Alternate Routing 94
4.3 User Access Line Call Processing (Non-CCS/ISDN Type) 94
4.3.4 Termination to Analog Lines 99
4.3.4.1 Busy/Idle Status 99
4.4 DSN Interswitch Trunk(IST) Call Processing (Non-CCS/ISDN Type) 99
4.4.1 Originating Call Processing 99
4.5 Code Interpretation 106
4.5.1 Defense Switched Network World Wide Numbering and Dialing Plan.. 106
4.5.1.1 DSN User Dialing 106
4.5.1.2 Interswitch and Intraswitch Dialing 107
4.5.1.2.1 Seven-Digit Dialing 107
4.5.1.2.2 Ten-Digit Dialing.. 107
4.5.1.3 Access Code 108
4.5.1.3.1 Access Digit 108
4.5.1.3.2 Precedence Digit 108
4.5.1.3.3 Service Digits 108
4.5.1.4 Route Code 109
4.5.1.5 Area Code 110
4.5.1.6 Switch Code 110

4.5.1.7 Line Number 110
4.5.1.8 Emergency Service 911 Conflict Resolution.. 110
4.5.2 DSN Switch Outpulsing Digit Formats ..... 110 a
4.5.2.1 Route Control Digit (RCD) [Inclusive thru 4.5.2.1.9] 112
4.5.2.1.1 Conceptual Backbone Network Structure.. 112
4.5.2.1.2 Routing Procedures. 116
4.5.2.1.3 Route Control Principles 116
4.5.2.1.4 Route Control Digit 117
4.5.2.1.5 Route Control Digit Rules. 117
4.5.2.1.6 Exterior Routing Rules 118
4.5.2.1.7 Interior Routing Rules 120
4.5.2.1.8 Subscribers on a Multifunction Switch 121
4.5.2.1.9 Dual-Theater/Homed End Offices with Single Addresses 121
4.5.4 Standard Test Numbers.. 125
4.5.5 Base Services – Abbreviated Numbers.. 125
4.5.6 Digit Reception Requirements 126
4.5.7 Digit Registration Capacity 126
4.5.8 Screening 126
4.5.8.1 Zone Restriction Servicing of Local Originators.. 126
SECTION 5 – Signaling 127
5.0 Introduction 127
5.1 Network Power Systems for External Interfaces.. 127
5.2 Line Signaling.. 127
5.2.1 Loop Start Line. 127
5.2.2 Ground Start Line ..... 127 a
5.3 Trunk Supervisory Signaling 128
5.3.1 Reverse Battery (RB) 128
5.3.2 Immediate Start.. 128
5.3.3 Normal and Abnormal Wink Start Operation 128
5.3.3.1 Normal Wink Start Operation.. 128
5.3.3.2 Glare Operation.. 128
5.3.3.3 Abnormal Operation 129
5.3.3.3.1 Wink Start 129
5.3.3.3.2 Glare Resolution 129
5.3.4 Delay Dial 129
5.3.5 Call for Service Timing 129
5.3.6 Guard Timing.. 129
5.3.7 Satellite Interface 129
5.3.8 Disconnect Control 130
5.3.9 Reselect or Retrial 130
5.3.10 Off-Hook Supervision Transitions (Unexpected Stop). 130
5.4 Control Signaling.. 131
5.4.1 Dial-Pulse (DP) Signals 131
5.4.2 Dual Tone Multi-Frequency (DTMF) Signaling 131
5.4.2.1 Standard Digit Format for Precedence 131
5.4.3 Multi-Frequency (MF R1 2/6) Signaling.. 131

5.5 Alerting Signals and Tones 132
5.5.1 Ringing.. 132
5.5.2 DSN Information Signals 133
5.6 Common Channel Signaling Number 7 (CCS7) 133
5.6.1 CCS7 Network Structure 134
5.6.2 Functional Description of the Signaling System Message Transfer Part (MTP) 134
5.6.2.1 Signaling System Structure – Functional Levels.. 135
5.6.2.1.1 Signaling Data Link Functions (Level 1). 135
5.6.2.1.2 Signaling Link Functions (Level 2) 135
5.6.3 Signaling Network Functions and Messages 135
5.6.3.1 Routing Label 135
5.6.3.2 Handling Messages Under Signaling Link Congestion.. 135
5.6.3.3 Message Discrimination and Distribution Functions.. 135
5.6.3.4 Signaling Network Management 136
5.6.3.5 Changeback.. 136
5.6.4 Noncircuit - Related Information Exchange - Signaling Connection Control Part (SCCP) 136
5.6.5 Additional Procedures for Switch-to-Switch/SCP TCAP Messages.. 136
5.6.6 Message Transfer Part (MTP) Restart 136
5.6.7 Signaling Link Management 136
5.68 Signaling Route Management.. 137
5.6.9 Common Characteristics of Message Signal Unit (MSU) Formats.. 137
5.6.9.1 Service Indicator 137
5.6.9.2 Subservice Field 137
5.6.10 Formats and Codes of Signaling Network Management Messages.. 137
5.6.11 Numbering of Signaling Point Codes 138
5.6.12 Functional Descriptions of the Integrated Services Digital Network (ISDN) User Part 138
5.6.12.1 Scope, Purpose, and Application 138
5.6.12.2 End-To-End Signaling 138
5.6.13.1 Notification Indicator 139
5.6.13.2 IS-UP Messages 139
5.6.13.3 IS-UP Parameters 139
5.7.1 DSN ISDN User to Network Signaling. 139
5.7.1.1 Application 139
5.7.1.2 Physical Layer 140
5.7.1.2.1 S/T Reference Point 140
5.7.1.3 Data-Link Layer 140
5.7.1.3.1 Data-Link Connections 140
5.7.1.3.2 Peer-to-Peer Procedures of the Data-Link Layer.. 140
5.7.1.4 Layer 3 DSN User-to-Network Signaling.. 141
5.7.1.4.1 Overview of Layer 3 141
5.7.1.4.2 DSN User-to-Network Signaling for Circuit-Switched (CS) Bearer Service. 141
5.7.1.4.3 Sequence of Messages for DSN Circuit-Switched (CS) Calls.. 141
5.7.1.4.4 Message Functional Definitions and Content.. 141
5.7.1.4.5 General Message Format and Information Elements (IE) Coding 143

5.7.1.4.6 Supplementary Services 145
SECTION 6 – Transmission 147
6.0 DSN Transmission Interface 147
6.1 Input Impedance 147
6.2 Inserted Connection Loss 147
6.2.1 Average Loss At 1004 Hz And Loss Control 148
6.2.2 Loss Variability At 1004 Hz 148
6.2.3 Attenuation Distortion 148
6.2.4 Tracking Error.. 149
6.3 Frequency Response 150
6.4 Overload Level 151
6.5 Return Loss 151
6.5.1 Two-Wire Line Return Loss 151
6.6 Longitudinal Balance 152
6.7 60 Hz Longitudinal Current 152
6.8 Idle Channel Noise 152
6.8.1 C-Message Weighting 152
6.8.2 Flat-Weighting Noise 153
6.9 Power Line Interference 153
6.10 Impulse Noise 153
6.11 Crosstalk Coupling 153
6.12 Intermodulation Distortion 153
6.13 Signal To Distortion Ratio (C-Notched Noise) 154
6.14 Absolute Delay 154
6.15 Envelope Delay Distortion 154
6.15.1 Echo Path Delay 155
6.16 Bit Integrity 155
6.17 Switched Digital Bit Error Rate 155
6.18 Encoding And Decoding Levels 155
6.18.1 DSN Fixed Loss Plan 156
6.18.1.1 Switch Transmission Level Points (TLPs). 156
SECTION 7 - System Interfaces 157
7.0 Introduction 157
7.1 PCM-24 Digital Trunk Interface 157
7.1.1 Interface Characteristics 157
7.1.2 Supervisory Channel Associated Signaling 159
7.1.3 Clear Channel Capability (CCC). 160
7.1.4 Alarm and Restoral Requirements 160
7.2 PCM-30 Digital Trunk Interface 161
7.2.1 Supervisory Channel Associated Signaling 162
7.2.2 Alarm and Restoral Requirements 163
7.3 Interoperation of PCM-24 and PCM-30 Systems 163
7.4 Analog Trunk Interface.. 163
7.4.1 E&M Trunk Circuits 163
7.4.2 Single Frequency (SF) Trunk Circuits 164
7.4.3 Dual Frequency (DF) Trunk Circuits 164

7.5 Integrated Digital Loop Carrier (IDLC) 164
7.5.1 E-Telemetry Scan Point System Operation 165
SECTION 8 - Tandem Switching.. 166
8.0 Introduction 166
8.1 Network Plan 166
8.2 System Architecture 166
8.3 Tandem Capabilities 166
8.4 Call Processing 169
8.5 Signaling 169
8.6 Transmission.. 169
8.7 Measurements and Administration 169
8.8 Service Standards 169
8.9 Network Management (NM) 170
SECTION 9 - Network Management 172
9.0 Introduction 172
9.1 DISA/DSN Network Management 172
9.2 Measurements and Data Generation.. 173
9.2.1 Common Data Requirements.. 173
9.2.1.1 Data Quality.. 173
9.2.2 Circuit Switched Network Measurements 173
9.2.2.1 Basic Switch Performance 173
9.2.2.1.1 Traffic Measurements 173
9.2.2.1.2 Reference Data 174
9.2.2.2 Line Servicing 174
9.2.2.3 Trunk Groups 174
9.2.2.4 Call Processor 174
9.2.2.5 Switch Services.. 174
9.2.2.6 Special Studies 174
9.2.2.7 Remote Switching Site.. 174
9.2.2.8 Features 174
9.2.3 Common Channel Signaling Network (CCSN) Measurements 175
9.2.4 ISDN Measurements 175
9.2.5 Traffic Capacity 175
9.3 Fault Management 175
9.4 Configuration Management (CM) 175
9.5 Automated Message Accounting (AMA) 175
9.5.1 DSN CDR Fields 176
9.5.2 CDR Data Retention 176
9.6 Performance Management 177
9.7 Network Management Controls.. 179
9.7.1 Automatic Controls 179
9.7.1 .1. Automatic Congestion Controls (ACC). 180
9.7.1.2. Trunk Reservation (TRE) 180
9.7.1.3. Selective Incoming Load Controls (SILC) 180
9.7.1.4. Precedence Access Threshold (PAT) 181
9.7.2 Overload Controls 181

9.7.2.1. Essential Service Protection (ESP) 181
9.7.3 Manual Controls 181
9.7.3.1 Trunk Group Controls 182
9.7.3.1.1 Cancel From (CANF) 182
9.7.3.1.2 Cancel To (CANT) 182
9.7.3.1.3 SKIP 183
9.7.3.1.4 Reroute (RR) 183
9.7.3.2 Code Controls 184
9.7.3.2.1 Code Controls - Code Gapping Controls.. 184
9.7.3.3 Total Office Manual Control Removal - Request/Response 185
9.7.4 Treatment Options Of Calls That Are Terminated 185
9.8 Remote Access to Switch 186
SECTION 10 - Integrated Services Digital Network (ISDN) Generic Requirements.. 187
10.0 Introduction 187
10.1 DSN Generic ISDN Features and Interface Descriptions.. 187
SECTION 11 – Synchronization 195
11.0 Introduction 195
11.1 Timing Modes 195
11.1.1 External Timing Mode 195
11.1.1.1 External Timing Mode 195
11.1.1.2 Line Timing Mode 195
11.1.2 Internal Clock Requirements 196
11.1.2.1 General 196
11.1.2.2 Stratum 4 Clock 196
11.2 Synchronization Performance Monitoring Criteria 196
11.3 DS 1 Traffic Interfaces 196
11.4 DSO Traffic Interconnects 196
SECTION 12 – Reliability 197
SECTION 13 – Security 199
Acronyms 201
Reference List 209
Appendix 1 Requirements Matrix 213
Appendix 2 - Deployable Voice Exchanges/Switch (DVX) 229
A2.1 Background 229
A2.1.1 Background 229
A2.1.2 Purpose 230
A2.2 Applicability 230
A2.3 Deployment Context 231
A2.3.1 Voice Networks 231
A2.3.2 Deployed Voice Exchanges / Switch DVX's 231
A2.3.3 Deployed Voice Exchanges / Access to DSN and/or Commercial Gateways.. 231
A2.4 Conclusion 232
APPENDIX 3 259
DSN VOICE OVER INTERNET PROTOCOL (VOIP) REQUIREMENT.. 259

A3.1 Background 259
A3.1.1 Definitions 260
A3.1.2 Approach 262
A3.1.3 Certification 263
A3.1.3.1 IP Enabled 263
A3.1.3.2 IP Centric 263
A3.2 VoIP System Requirements 263
A3.2.1 Voice Quality 263
A3.2.2 Coder/Decoder (CODEC) 264
A3.2.3 Multi-level Precedence & Preemption (MLPP) 264
A3.2.4 Security 264
A3.2.5 Network Management (NM) 266
A3.2.6 Timing 266
A3.2.7 Latency.. 267
A3.2.8 IPv6 Capable 267
A3.3 Local Area Network (LAN) Requirements.. 267
A3.3.1 LAN Parameters 268
A3.3.1.1 Delay 268
A3.3.1.2 Jitter 268
A3.3.1.3 Packet Loss 269
A3.3.2 Class of Service (CoS) 269
A3.3.2.1 CoS Models.. 269
A3.3.2.2 C2VGLAN Traffic Prioritization.. 270
A3.3.3 Quality of Service (QoS). 270
A3.3.3.1 Queuing.. 270
A3.3.3.2 Policing 271
A3.3.3.3 Virtual LANs (VLANs) 272
A3.3.4 LAN Design 273
A3.3.4.1 Reliability.. 274
A3.3.4.1.1 Maximum Downtime 275
A3.3.4.2 Management 276
A3.3.4.2.1 Interface.. 276
A3.3.4.2.2 Measurements 277
A3.3.4.3 Security 277
A3.3.4.4 Traffic Engineering (TE) 278
A3.3.4.4.1 Bandwidth 278
A3.3.4.4.2 TE Calculations.. 278
A3.3.4.4.3 Non-Converged LAN TE.. 279
A3.3.4.4.4 Converged LAN TE.. 279
A3.3.4.5 LAN Architectures.. 279
A3.3.4.5.1 C2VGLAN 279
A3.3.4.5.1.1 Access Layer 280
A3.3.4.5.1.1 Distribution & Core Layers.. 281
A3.3.4.5.2 VGLAN 285
A3.4 Requirements Summary 285
APPENDIX 4 301

Echo Canceller (EC) Requirements 301
A4.1 Background 301
A4.2 Purpose 301
A4.3 Applicability 302
A4.4 Definitions 302
A4.5 Requirements 303
A4.5.1 Echo Canceller Functionality 303
A4.5.2 2100 Hz Tone Disable Capability 304
A4.5.3 EC Hardware 304
A4.5.4 Echo Cancellation on PCM Circuits 304
A4.5.5 External Echo Cancellers 305
A4.5.6 Internal Echo Cancellers 306
A4.5.7 Device Management 306
A4.5.8 Reliability 306
A4.5.9 Security 306
A4.6 EC Application Guidelines 307
A4.6.1 E C Placement.. 307
A4.6.2 Additional Guidance 308
A4.6.3 Exceptions 309
APPENDIX 5 311
DSN Switch SONET Digital Trunk Interface 311
A5.1 Background 311
A5.2 Purpose.. 311
A5.3 Applicability 312
A5.4 Definitions 314
A5.5 Requirements.. ..... 3 14
A5.5.1 Miltary Unique Features 3 14
A5.5.2 Interface 314
A5.5.3 ROUTE Assignment 315
A5.5.4 Facility Alarms 315
A5.5.5 Synchronization 315
A5.5.6 Reliability.. 316
A.5.5.7 Security 316
APPENDIX 6 319
Integrated Access Switch/System (IAS) Requirements.. ..... 3 19
A6.1 Background 319
A6.2 Purpose.. 319
A6.3.1 Definitions.. 320
A6.4 Integrated Access Switch Requirements.. 323
A6.4.1 Interfaces 323
A6.4.2 Security 326
A6.4.3 Numbering Plan 326
A6.4.4 Provisioning 326
A6.4.5 Reliability.. 327
A6.4.6 Loop Back Capability 327

A6.4.7 Inverse Multiplexer (IMUX) Capability 327
APPENDIX 7 329
Customer Premises Equipment (CPE) Requirements 329
A7.1 Background 329
A7.2 Purpose 329
A7.3 Applicability 329
A7.4 Definitions.. 331
A7.5 Requirements 333
A7.5.1 2 Wire Analog Instruments / Devices.. 334
A7.5.2 2 Wire Digital Instruments / Devices.. 334
A7.5.3 4 Wire Digital Instruments / Devices.. 335
A7.5.4 ISDN Terminal Adapter.. 335
A7.5.5 Automated Receiving Devices.. 336
A7.6.5 Security 337
APPENDIX 8 339
Video Teleconferencing (VTC) Requirements 339
AS. 1 Background 339
AS.2 Purpose 339
AS.3 Applicability 340
A8.4 General 340
A8.5 Video Teleconferencing Requirements.. 342
A8.6 Definitions 343
AS.7 Security 344
APPENDIX 9 347
DSN Network Element (NE) Generic Requirements 347
A9.1 Background 347
A9.2 Purpose 347
A9.3 Applicability 347
A9.4 Definitions 348
A9.5 Requirements 349
A9.5.1 General 349
A9.5.1.1 Analog 350
A9.5.1.2 Serial 350
A9.5.1.3 BRI ISDN 350
A9.5.1.4 DS 1 Interface Requirements 350
A9.5.1.5 E 1 Interface Requirements 350
A9.5.1.6 DS3 Interface Requirements 350
A9.5.1.6.1 Framing.. 351
A9.5.1.6.2 Line Coding 351
A9.5.1.7 Timing 351
A9.5.1.8 OC-3 Interface Requirements 351
A9.5.2 Device Management 351
A9.5.2.1 Management Options.. 351
A9.5.2.2 Fault Management 351

A9.5.2.3 Loop Back Capability 352
A9.5.3 Operational Configuration Restoral 352
A9.6 Security 352

List of Tables

Table l-2. Subscriber Access Lines Used in the DSN 10
Table 3- 1. Announcements 45
Table 3-2. Multi-Level Precedence and Preemption Signaling Sequences 56
Table 3-3. Precedence Level Information Element (Codeset 5) 61
Table 3-4. Disconnect Message Cause Value 62
Table 3-5. US National Codepoints for Signal Values 63
Table 3-7. COI Checks for an originating call request. 75
Table 3-8. COI Checks for a Terminating call request. 77
Table 3-9. Precedence Parameter and Sub Fields 79
Table 3-10. RELEASE Message Cause Values 82
Table 3-l 1. DSN Switch MLPP CCS7 IAM Called Party Number Format 82
Table 3-12. CAS-to-CCS Trunk Interworking Matrix (Line-to-Trunk and Trunk-to-Line) 84
Table 3-13. CAS-to-CCS Trunk Interworking Matrix (Trunk-to-Trunk) 87
Table 4-l. E&M Lead Signaling States 95
Table 4-2. Call Processing - Four-Wire User Access Lines 95
Table 4-3. Call Processing Two-Wire User Access Lines 97
Table 4-5. Terminating Call Processing From DSN TO DSN ISTs 103
Table 4-6. DSN User Dialing Format 106
Table 4-7. Precedence And Service Access Codes 108
Table 4-8. Route Code Assignment 109
Table 4-9. DSN Switch MFR1 Outpulsing Digit Format 111
Table 4-10. DSN Switch DTMF Outpulsing Digit Format 111
Table 4- 11. Route Control digit Logic 118
Table 4-12. Route Control Digit Logic for Exterior Routing 119
Table 4-l 3. ROUTINE CALLS 119
Table 4-14. Precedence Calls Above ROUTINE – Idle Search Sequence 119
Table 4- 15. Precedence Calls Above ROUTINE – Preemptive Search Sequence 119
Table 4-16. Route Control Digit Logic for Interior Theater/Home Grid Routing 120
Table 4-17. ROUTINE CALLS 120
Table 4-l 8. Precedence Calls Above ROUTINE – Idle Search Sequence 120
Table 4-19. Precedence Calls Above ROUTINE – Preemptive Search Sequence 121
Table 4-20. Route Control Digit Logic in G12 Centers 122
Table 4-2 1. ROUTINE CALLS 122
Table 4-22. Precedence Calls Above ROUTINE- Idle Search Sequence 123
Table 4-23. Precedence Calls Above ROUTINE- Preemptive Search Sequence 123
Table 4-24. Standard Directory Numbers 125
Table 4-25. Standard Test Numbers 125
Table 5-l. Reselect or Retrial 130
Table 5-2. DTMF Generation and Reception from Users and Trunks 131
Table 5-3. MF(R1)2/6 Generation and Reception for Trunks 132
Table 5-4. DSN Ringing Tone and Cadence 132
Table 5-5. DSN Information Signals 133

Table 5-6. Setup Message For MLPP Call 143
Table 6- 1. Input Impedance Requirements 147
Table 6-2 Average Loss Requirements 148
Table 6-3. Maximum Loss Variability 148
Table 6-4. Attenuation Distortion 149
Table 6-5. Tracking Error 150
Table 6-6. Trunk-to-Trunk Frequency Response 150
Table 6-7. Line-To-Line Frequency Response 151
Table 6-8. Longitudinal Balance 152
Table 6-9. C-Message Waiting 152
Table 6- 10. Intermodulation Distortion 153
Table 6-l 1. Signal-to-Noise Distortion 154
Table 6- 12. Envelope Delay Distortion Limits 154
Table 6- 13. Echo Path Delay 155
Table 6-14. End-to-End Loss 156
Table 7-2. PCM-24 D3/D4 Interface Characteristics 158
Table 7-3. PCM-24 ESF Interface Characteristics 159
Table 7-7. PCM-30 Alarm And Restoral Requirements 163
Table 8- 1. Tandem Features 167
Table 9-l. Call Detail Recording Data 176
Table 9-2. Performance Management Data 177
Table 10-l. BRI Access, Call Control, and Signaling 188
Table 1 O-2. Uniform Interface Configurations for BRIs 189
Table 10-3. BRI Features 190
Table 10-4. PRI Access, Call Control, and Signaling 192
Table 10-5. PRI Features 192
Table 1 O-6. Packet Data Features and Capabilities 193
Table A2- 1: Voice Certification Requirements 236
Table A6.1 - T1 PRI Access, Call Control, and Signaling 324
Table A6.2 - T1 PRI Access, Call Control, and Signaling 325
Table A6.3 - BRI Access, Call Control, and Signaling 325

List of Figures

Figure 1-1. Requirement Procedures 2
Figure 1-2. DSN Architecture and Components 9
Figure 1-3. Example Installation Configurations.. 13
Figure 3-2. DSN Preempt Signals 54
Figure 3-3. Call Hold Scenarios.. 69
Figure 4-1. Theater/Home Grid Array 114
Figure 4-2. Basic Polygrid Pattern.. 115
Figure 4-3. Dual-Homed End Office with Single Address Grid Array. 124
Figure 5-1. CCS7 Backbone Network Architecture 134
Figure A4.1 - Echo Canceller Applications in the DSN.. 308
Figure A6.2 - Typical Connections for an Integrated Access Switch.. 321
Figure A6.3 - MLPP Implementation and the Integrated Access Switch.. 322
Figure A6.4 - Applications for the Integrated Access Switch 323
Figure A7.5 - Typical CPE connections to the DSN. 331
Figure A7.6 - ISDN Reference Points. 332
Figure AS. 1 Typical VTC System connections to the DSN. 342
Figure A9.1 Network Element Diagram.. 348

SECTION 1 – Introduction

1.1 Purpose

The purpose of this Generic Switching Center Requirements (GSCR) document is to specify the technical requirements for a telecommunications switch to be used in the Department of Defense (DoD) network in support of voice, video and data services. The DoD voice network consists of three major networks, the Defense Switched Network (DSN), Defense RED Switch Network (DRSN), and tactical networks.

This document specifies the technical requirements for the DSN and commercial type Deployable Voice Exchanges (DVXs) (a tactical element, see paragraph 15.6). This document excludes the DRSN, tactical networks (e.g., Tri-Tat, MSE), except for the interface requirements. This is a technical specification document to support the policies and requirements established by Chairman, Joint Chiefs of Staff Instruction (CJCSI) 6215.01B.This document may be used to support acquisition, testing, network management, configuration management, and policy development processes. This document identifies only the MINIMUM requirements and features applicable to the overall DoD community. This document may not contain a complete set of specifications for a commercial telecommunications switch. Procuring Agencies may need to include other specifications or additions to have a complete product specification.

1.2 Role of GSCR in Implementing Public Law 107-314

Congress passed Public Law 107-3 14 / House Resolution 4546: National Defense Authorization Act (NDAA) for FY03. House Report 107-436 on H.R. 4546. The GAO noted about the DoD processes that the law addresses,

- "This provision would require the Secretary of Defense to establish a clear, uniform, and enforceable policy, applicable to all military and defense agencies, regarding the testing and certification requirements that must be satisfied before a telecom switch can be connected to the Defense Switch Network."

- "The committee understands that there is a current policy in place, but believes the current policy is not well defined and does not have clear requirements for certifying and connecting telecom switches. The Department of Defense must apply the new policy consistently, or risk vendor re-evaluating the Department as a customer. "

The new law defines a telecom switch as follows:

- "In this section, the term "telecom switch" means hardware or software designed to send and receive voice, data, or video signals across a network that provides customer voice,

data, or video equipment access to the Defense Switch Network or public switch telecommunications network."

ASD(NII)/DoD CIO DoD Instruction Number 8100.3, dated 16 Jan 2004, implements the Public Law.

The primary DSN User Requirements are identified by the Joint Staff in CJCSI 6215.01B, the Global Information Grid (GIG) Capstone Requirements Document JROCOM 134-01 and in DoDI 5200.40 "Department of Defense Information Technology Security Certification and Accreditation Process (DITSCAP)". The DISA DSN SSM translates the JS requirements into network and telecom switch requirements via the DSN Architecture and System Design and the DSN System Security Authorization Agreement (SSAA). The DSN SSM develops the DSN Generic Switching Center Requirements (GSCR) Document. DISA JITC develops the DSN Generic Switching Test Plan (GSTP) based on the DSN GSCR to be used in interoperability certification of telecom switches. The DISA Center for Information Assurance Applications develops the DSN Security Technical Implementation Guide (STIG) and develops the DSN Information Assurance Test Plan (IATP) based on the DSN STIG to be used in security certification and accreditation of telecom switches. An overview of the requirements procedures is depicted in Figure 1- 1.

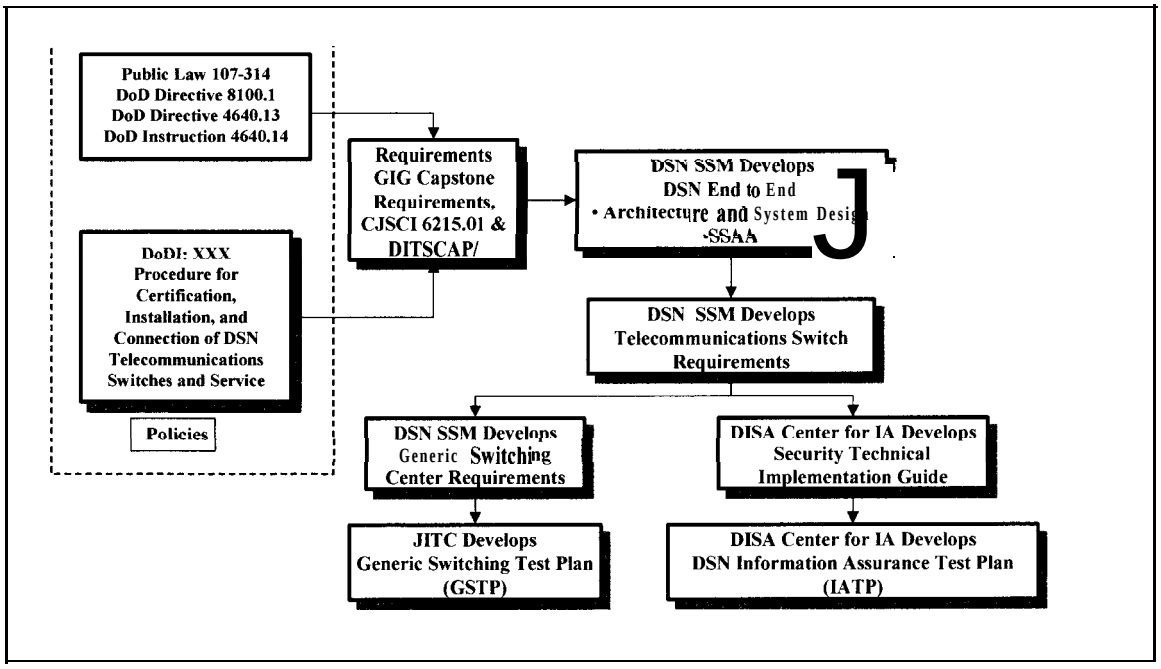

Figure l-l. Requirement Procedures

1.3 Requirements

This GSCR identifies the minimum functional requirements and performance requirements for circuit switched systems used in the Defense Switched Network (DSN). DSN switch features fall into two categories: Minimum requirements and conditional requirements.

1.3.1 Minimum Requirements

Minimum Requirements are features and capabilities considered necessary for a particular switch type to support wartighter missions in DoD. These features and capabilities will require certification prior to introduction into the DSN.

1.3.2 Conditional Requirements

Conditional requirements are features and capabilities that are not considered critical for DoD mission support based on DoD policies. It is however, recognized that such features do have utility for some users or for specific operations. To ensure interoperability and consistency of the Multi-Level Precedence and Preemption (MLPP) functionalities across all platforms, these features and capabilities are specified with set parameters. If these features and capabilities are provided, the switch shall perform and meet the specifications as identified in this GSCR.

1.4 Applicability

This specification applies to all DSN switches procured or leased for installation in the DSN. All services, features and functions (both unique military and standard commercial) identified in this GSCR are to be implemented in DSN assets including switches, trunks, lines, Customer Premises Equipment (CPE), and ancillary equipment. This specification also applies to upgrades and new software loads for existing equipment.

This GSCR is the governing specification document that takes precedence over the explicit or implicit requirements of subsidiary or reference documents, standards, and specifications. In the event of conflict, the explicit requirements of this GSCR take precedence over the explicit or implicit requirements of the LATA Switching Systems Generic Requirements (LSSGR), Generic Requirements (GR), and DISAC 370-175-13.

The DOD GSCR dated 08 September 2003 was written as a Military specification for a switching facility and it changed the applicability from a facility specification to a hardware specification (a telecommunications switch), and used the commercial standards LSSGR as the base structure. This revision of the GSCR continues the use of the LSSGR as the base requirement, but references each Generic Requirements (GR) document directly. Except for Military Unique Features (MUFs) such as MLPP, there should be no differences in the technical specifications between the LSSGR and this GSCR.

1.5 Specification language

The word “MUST”, or the terms ‘REQUIRED” or “SHALL” mean that the definition is an absolute requirement of the specification.

The phrase “MUST NOT,” or the phrase “SHALL NOT,” means that the definition is an absolute prohibition of the specification.

The word "MAY," or the adjective "CONDITIONAL," means that an item is optional.

The phrase "THE NETWORK" as referenced in the LSSGR shall mean the DSN network.

1.6 DSN System Overview

As approved by the Office of the Secretary of Defense (OSD), the DSN is an interbase, non-secure or secure C2 telecommunications system that provides end-to-end command use and dedicated telephone service, voice-band data, and dial-up Video Teleconferencing (VTC) for C2 and non-C2 DoD authorized users in accordance with national security directives. Non-secure dial-up voice (telephone) service is the system's principal requirement. The DSN system is used only for official business or in the interest of the government and is the first choice for all switched voice and dial-up video telecommunications between DoD user locations. Other systems shall not be used to "BY PASS" DSN unless the Joint Staff provides a waiver. The Joint Staff Policy CJCSI 6215.01B defines DSN performance and features required to ensure end-to-end global voice quality, and interoperability for all voice C2 services. The DSN capability objectives include:

- Survivable service
- Assured connectivity
- Responsive service
- Surge capacity
- Secure service
- Cost-effective service
- Interoperable service
- National Security/Emergency Preparedness (NS/EP) compliant service

1.6.1 DoD C2 Users

Command and Control Users of DoD voice services that include dial-up audio, dial-up Video and dial-up data services are those users that employ command and control as defined in Joint Pub 1-02, 23 March 1994, "Department of Defense Dictionary of Military and Associated Terms"

"The exercise of authority and direction by a properly designated commander over assigned and attached forces in the accomplishment of the mission. Command and control functions are performed through an arrangement of personnel, equipment, communications, facilities, and procedures employed by a commander in planning, directing, coordinating, and controlling forces and operations in the accomplishment of the mission. Also called C2."

These C2 users are involved in originating or receiving the following types of activities in support of DoD missions:

(1) Official government business and combat support. Communications (originating or receiving) that require:

(1) Rapid transmission by telephonic means.

(2) Expeditious action by called parties and/or furnishing essential information for the conduct of government operations.

(2) Combat Support. Crisis and War Communications (originating or receiving) under the following conditions:

a. Situations that gravely affect the security of national and allied forces.

b. Reconstitution of forces in a post-attack period.

c. Intelligence essential to national security.

d. Conduct of diplomatic negotiations to reduce or limit the threat of war.

e. Implementation of federal government actions essential to national survival.

f. Situations that gravely affect the internal security of the United States.

g. Civil Defense actions concerning US population and disasters or events of extensive seriousness having an immediate and detrimental effect on the welfare of the population.

h. Vital information having an immediate effect on aircraft, spacecraft, or missile operations.

(3) Command and Control. Crisis and War Communications (originating or receiving) under the following conditions:

- Command and control of military forces essential to defense and retaliation.
- Critical intelligence essential to national survival.
- Conduct of diplomatic negotiations critical to the arresting or limiting of hostilities.
- Dissemination of critical civil alert information essential to national survival.
- Continuity of federal government functions essential to national survival.
- Fulfillment of critical US internal security functions essential to national survival.
- Catastrophic events of national or international significance.

(4) National Level Command. Crisis and War Communications (originating or receiving) for the following National Level Users:

- The President of the United States, Secretary of Defense, and Joint Chiefs of Staff.
- Commanders of combatant commands when declaring Defense Condition One or Defense Emergency.
- US Comabatant Commanders North American Air Defense (NORAD) when declaring either Defense Condition One or Air Defense Emergency.
- Other national authorities the President may authorize.

(5) National Level Collaborative Communications. Originating or receiving for the following National Level Users:

- The President of the United States, Secretary of Defense, and Joint Chiefs of Staff.
- Commanders of combatant commands when declaring Defense Condition One or Defense Emergency.
- Combatant Commanders NORAD when declaring either Defense Condition One or Air Defense Emergency. Other national authorities that the President may authorize in conjunction with Worldwide Secure Voice Conferencing System conferences.

1.6.2 DSN Support to Telephony (Voice, Video, Data) Users

DSN supports three categories of users:

a. **Special C2 Users.** A special class of user who has access to the DSN for essential communications for planning, directing, and controlling operations of assigned forces pursuant to assigned missions. This user requires capabilities that provide crises, preattack, and theater nonnuclear war telecommunications service for intelligence, alert, and strategic readiness. This user also requires communications among the President, Secretary of Defense, Chairman of the Joint Chiefs of Staff, and other members of the Joint Chiefs of Staff, Service Chiefs, and the Combatant Commanders. Specifically, these special C2 users are identified through one or more Joint Staff, Combatant Commanders, Service, or DoD agency validation processes. The following are required capabilities of special C2 users:

1. Joint Staff-approved FLASH, FLASH OVERRIDE, or IMMEDIATE precedence origination.
2. Combatant Commanders-validated minimum-essential circuits.
3. Combatant Commanders or Service-approved IMMEDIATE and PRIORITY precedence origination.

b. C2 **Users.** Users who have a requirement for C2 communications but do not meet the criteria for the class of "special C2 user." C2 users include any person (regardless of the position in the chain-of-command) who issues or receives guidance or orders that direct, control, or coordinate any military forces regardless of the nature of the military mission (including combat support, administration, and logistics), whether said guidance or order is issued or effected during peacetime or wartime. There are three types of C2 users:

(1) Users approved by the Joint Staff, Combatant Commanders, Service, and agency for the PRIORITY and ROUTINE precedence origination.

(2) DoD users having a military mission that might receive C2 calls for orders or direction at precedences above the ROUTINE, even though they do not have a C2 mission for issuing guidance or orders. Therefore, these users must be served by switching facilities that provide the MUFs of the DSN.

(3) Any non-DoD US Government organization supporting Homeland Security that require the Military Unique Services of the DSN and are validated by the Joint Staff.

c. Non-C2 **Users.** DoD, non-DoD, nongovernmental, and foreign government users having no mission or communication requirements to ever originate or receive C2 communications under the existing military scenarios. During a crisis or contingency, they may be denied access to the DSN. Since the DSN is the official DoD switched voice network and the preferred voice communications means, Non-C2 users are provided access to the DSN for the economic benefits of the DoD. It is also the primary means of secure (STU-III/STE family) communications for non-tactical C2 users. DSN must be the user's first choice; however, if DSN is not immediately available, or if the called party does not have access to DSN service, other long-distance calling methods may be used.

1.6.3 DSN Support to C2 Users over the Full Range of Stress Levels

The DSN shall provide end-to-end support to DoD under conditions of a both a regional crisis in one theater and a surge capability to respond to a regional crisis occurring nearly simultaneously in another theater. Support shall be provided over the following Stress Levels in priority order:

- Military Operations other than War, Crisis, Terrorist attack, Limited Regional Conflicts, Maior Theater War, Preattack, and Theater Nonnuclear War. DSN network capabilities must support all peacetime readiness users, plus surge requirements for terrorist attacks and nonnuclear war. These capabilities are handled according to established precedence.

- Post-attack. In the CONUS, DSN possesses the capability to reconstitute itself, from segments of the DSN surviving a terrorist attack, conventional or nuclear war, to support the NCS in reconstituting national communications. Overseas, DSN possesses the same capabilities to support the Theater Combatant Commanders after a terrorist attack, limited regional conflict, major theater conflict, or non-nuclear war.

- Peacetime Readiness. DSN supports C2 and non-C2 users.

  Early Transattack (few weapons, possible HEMP) or nuclear "Dirty Bomb" terrorist attack. DSN will support C2 user traffic as able.

  Massive Nuclear Attack. DSN will support special C2 user traffic as able.

1.6.4 DSN Architecture

The Joint Staff policy 62 15 .O 1 B defines network performance and features required to ensure end-to-end global voice quality, interoperability for all voice Command and Control (C2) services. The Defense Information Systems Agency (DISA) is responsible for engineering, network design, and technical support. The DSN architecture shown in Figure l-2 meets the Joint staff policy mandate.

If a telecom switch device is not specifically mentioned in this document and its Appendixes, it shall not be authorized, unless a waiver is received by the ASD (Assistant Secretary of Defense) for Command, Control, Communications, and Intelligence (C3I).

The DSN architecture is a two level network hierarchy consisting of DSN backbone switches and Military/Agency installation Switches. The switches are connected by several types of trunks as shown in Tables l-l to l-3.

Joint Staff policy and subscriber mission requirements determine which location requires the full set of MUFs and capabilities offered by the DSN. The DSN architecture therefore consists of several categories of switches. They may be used as outlined in the paragraphs following Table 1-3.

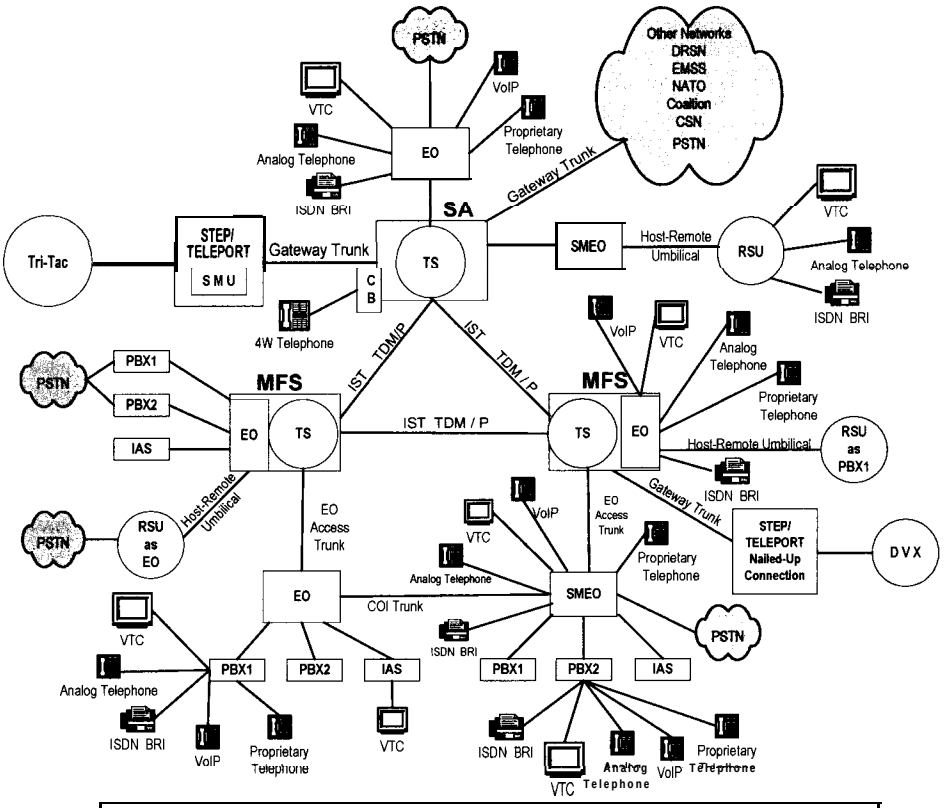

4w	-4 Wire Subscriber/Line	PBX1	Private Branch Exchange (MLPP capable)
BRI	Basic Rate Interface	PBX2	Private Branch Exchange (non-MLPP capable)
CB	-Channel Bank	PSTN	Public Switching Telephone Network
COI	Community of Interest	RSU	-Remote Switching Unit
CSN	-Canadian Switched Network	SA	-Stand-Alone Switch
DRSN	Defense Red Switch Network	SMEO	-Small End Office
DVX	Deployable Voice Exchange	SMU	- Switch Multiplex Unit
EMSS	Enhanced Mobil Satellite System	STEP	Standard Tactical Entry Point
EO	-End Office	TDM	- Time Division Multiplexing
IAS	Integrated Access Switch	Tri-Tac	Tri-Service Tactical
ISDN	Integrated Services Digital Network	TS	-Tandem Stitch
IST	Interswitch Trunk	VOP	Voice Over Packet (Interswitch Trunk)
MFS	Multi-Funcbon Switch	VOIP	Voice Over Internet Protocol (Line/Sub Service)
NATO	North Atlantic Treaty Organization	VTC	-Video Teleconferencing
P	Packetized		

Figure l-2. DSN Architecture and Components

The interfaces of the DSN architecture is shown in the following tables:
Table l-l lists the trunk types and signaling used in the DSN, including legacy interfaces.
Table l-2 describes the types of subscriber access lines used in the DSN
Table l-3 summarizes the trunk types required for each DSN Switch type

Table l-l. Trunk types and signaling used in the DSN (includes legacy interfaces).

Trunk Type	Purpose/Use	Switch-to-Switch Signaling	Electrical Interface
Interswitch Trunk (IST)	Backbone transport TS-to-TS	SS7(ANSI T1.619a,and ITU Q.735.3) CAS MF(R1) 2/6	T1:(B8ZS/ESF, AMI/D4) El :(HDB3, AMI) OC3
Community of Interest Trunk (COI)	EO/SMEO to EO/SMEO direct traffic		T1:(B8ZS/ESF, AMI/D4) E1:(HDB3, AMI) OC3, Analog

	onlv		
EO Access Trunk	EO/SMEO to Tandem Switch	SS7/PRI(ANSI T1.619a, and ITU Q.955.3, Q.735.3), CAS (MF {R1} 2/6,DP,DTMF), Analog (E&M)	T1 :(B8ZS/ESF, AMI/D4) E1:(HDB3, AMI) OC3, Analog
Gateway Trunk	DSN to other networks	SS7/PRI (ANSI T1.619a, and ITU **Q.955.3, Q.735.3)** CAS (MF {R1} 2/6, DP, DTMF) and various host-nation Commercial interfaces	T1 :(B8ZS/ESF, AMI/D4) El :(HDB3, AMI) OC3, Analog
Host Remote (H-R) Link	Remote unit to host umbilical	Proprietary	T1 :(B8ZS/ESF, AMI/D4) El :(HDB3, AMI), OC3
PBX] Access Trunk (MLPP Capable)	PBX to EO/SMEO Access	SS7/PRI(ANSI Tl.6 19a, and ITU Q.955.3, **Q.735.3)** CAS (MF {Rl} 2/6, DP, DTMF), Analog (E&M)	T1 :(B8ZS/ESF, AMI/D4) El :(HDB3, AMI) OC3, Analog
PBX2 Access (non-MLPP) Trunk	PBX to EO/SMEO Access	One of the following is required as a minimum : Non-MLPP Commercial ISDN PRI, CAS (MF {R1}, MF{R2} 2/6, DP, DTMF), Analog (E&M)	T1 :(B8ZS/ESF, AMI/D4) E1:(HDB3, AMI) OC3, Analog
Tactical Trunk	Not Part of DSN	Tri-Tat Unique DTG	CVSD- conditioned diphase

Table l-2. Subscriber Access Lines Used in the DSN

Type Subscriber Line	Signaling	Electrical Interface
2-wire Analog Subscriber Line	IAW GR-506-CORE. For Precedence see GSCR Table 5-4, 5-5	2-wire analog loop
Digital/Analog Proprietary Subscriber Line	Proprietary	Proprietary
ISDN BRI Subscriber Line	ISDN BRI ANSI T1.619a, NI-1, NI-2, 5ESS Custom, NTI MSL- 100, ETSI ITU-T,	ST, U
4-Wire Analog Subscriber Line	DP, DTMF, E&M	4-Wire E&M TypeI, Type11 Type V
ISDN PRI	ISDN PRI, (Commercial, NI-2, 6 19a, 5ESS custom	Tl, El

Table l-3. Trunk and Line Types Required By Switch Type

Trunk/Line Type	TS	MFS	EO	SMEO	PBX1	PBX2	DVX
T1 SS7 (T1 619a)	R	R	R	C	C	C	C
E1 SS7 (ITU-T Q.735.3 (R=EUROPE ONLY)	R*	R*	R*	C	C	C	C
T1 CAS MF R1	R	R	R	C	C	C[1]	C
T1 CAS DTMF	R	R	R	R	C	C[1]	R
T1 CAS DP	R	R	R	R	C	C[1]	R
El CAS MF Rl (R=EUROPE ONLY)	R	R	R	R	C	C	R
El CAS DTMF (R=EUROPE ONLY)	R	R	R	R	C	C	R
El CAS DP (R=EUROPE ONLY)	R	R	R	R	C	C	R
Tl ISDN PRI (ANSI T1.619a)	R	R	R	R	R	C	R
ISDN PRI - NI-1/2 (Network and User)	R	R	R	R	R	C[1]	R
E 1 ISDN PRI (ITU-T Q.955.3) (R=EUROPE ONLY) (Network and User)	R*	R*	R*	C	C	C	C
2-wire analog Lines		R	R	R	R	C[2]	R
ISDN BRI Subscriber NI-1/2		R	R	R	C	C[2]	R
ISDN-BRI ANSI Tl-619a		R	R	R	C	C	R

C[1] One of the type is required

C[2] – One of the type is required

R* ' Required if switch is to be installed in OCONUS-ETSI Compliant Countries

1.6.5 DSN Backbone Switches

DSN backbone switches are integral to the DSN (and part of the GIG) which provide tandem switching for long-distance DSN services. The backbone switch types are the tandem switch (TS) and the Multifunction Switch (MFS). These switches have the full set of MUFs as defined in this GSCR. The MFS contains both the EO and TS switch functionalities .

1.6.6 Military/Agency Installation Confimration and Switch Types

Military/Agency installation switch types are integral to the DSN (and part of the GIG) and provide origination and reception of DSN calls to the DSN user categories defined in CJCSI 6215.01B. Because of the various degrees of mission support performed by the users at an installation, the following Military/Agency Installation Switch Types are defined: End Office (EO), Small End Office (SMEO), Private Branch Exchange Type 1 (PBX1), and Private Branch Exchange Type 2 (PBX2). An example installation configuration is shown in Figure l-2. The intent is to allow for maximum flexibility consistent with satisfying the Combatant Commander's C2 mission requirements.

An installation configuration can vary from a single EO or SMEO with subtending PBXs or RSUs to an installation, which for cost or operations considerations, uses multiple switches such as a mixture of EOs, SMEOs, PBX1 s, PBX2s and RSUs, depicted in Figure l-2, interconnected in a hub, ring, mesh or hybrid configuration (not depicted). When this is done, at least two physically diverse access trunks must be used to connect to the DSN tandem backbone. Regardless of where terminated on the installation switches, the Special C2 User, the C2 User, and the Non-C2 User must still be provided the GoS and MUFs required by CJCSI 6215.01B for their class of user.

The network management capabilities required by the GSCR to support Special C2, C2, and Non-C2 Users are still required in all installation switching configurations. It is the responsibility of the installation manager to ensure that the installation configuration meets CJCSI 6215.0 1B and GSCR requirements. JITC must still certify the end-user to end-user interoperability within the installation and with the DSN tandem backbone. JITC must also certify the network management controls and the security afforded by the installation configuration. Any system, regardless of technology (e.g., Voice Over Internet Protocol-VOIP/Voice Over Asynchronous Transfer Mode (VTOA), that provides end-to-end command use and dedicated telephone service, voice-band data, and dial-up Video Teleconferencing (VTC) for Special C2 User, C2 User, and non-C2 DoD authorized users in accordance with national security directives must be certified by the JITC for its application as one of the DSN office type (TS/MFS/EO/SMEO/PBX1/PBX2) specified in this GSCR. VoIP specific guidance and specifications is provided in Appendix 3 entitled DSN Voice over Internet Protocol Generic Requirements.

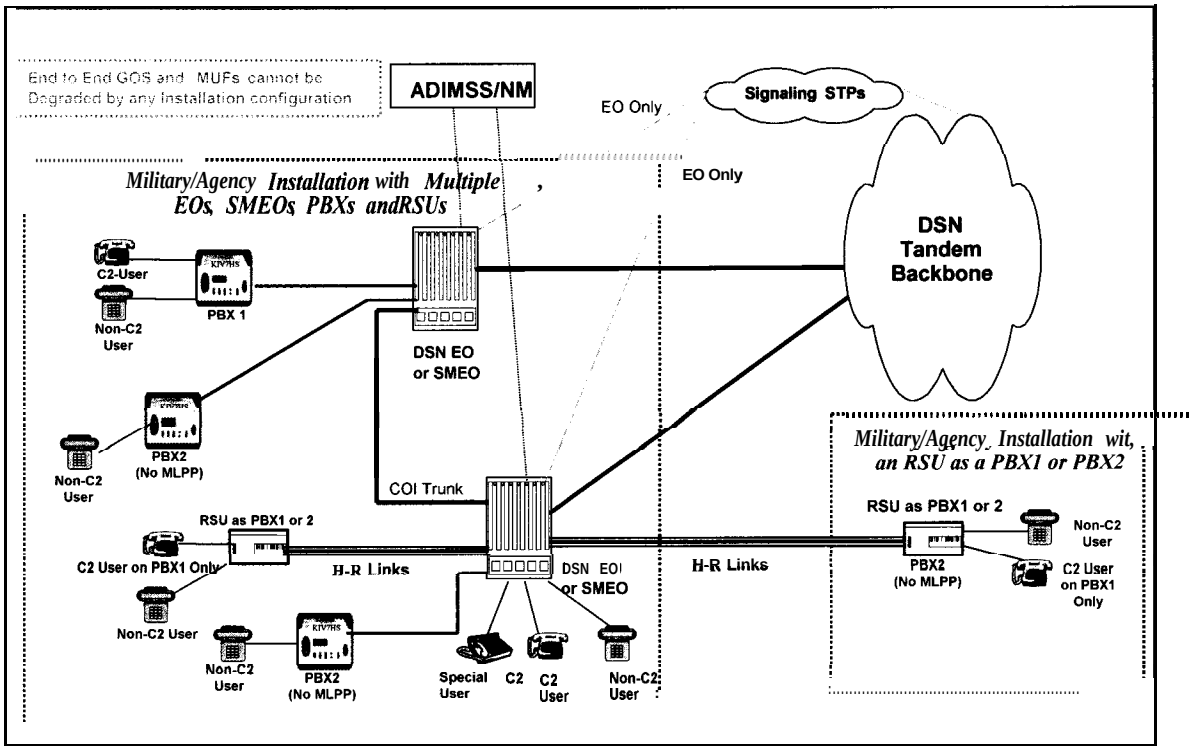

Figure 1-3. Example Installation Configurations

1.6.6.1 End Office

End Offices (EO) are switches integral to the DSN (and part of the GIG) which provide a significant amount of the intra-DoD communications to meet the mission requirements of a Military/Agency installation. An End Office provides access to the long-haul backbone of the DSN by interconnection using EO access trunks. Where an installation's EO function is provided by an MFS, access to the long-haul DSN backbone is provided through the tandem portion of the MFS. A large installation could have multiple end office switches, where each one of them provides a significant amount of DoD communications for the missions of that installation or tenants on the installation. An end office can serve all DSN user categories defined in CJCSI 6215.01B.

1.6.6.2 Small End Office

Small End Offices (SMEOs) are switches integral to the DSN (and part of the GIG) which provide end office functions defined in Paragraph 1.6.6.1 above. The SMEO is used where a smaller DoD community requires DSN C2 services. SMEO technology is based on a commercial Private Automatic Branch Exchange (PABX) with MLPP capabilities, thereby providing a lower-cost end office solution. The SMEO does not provide full DSN Network Traffic Management control capability, offers limited performance reporting, and may not support SS7 signaling.

1.6.6.3 Private Branch Exchange

Private Branch Exchanges (PBXs) are MILDEP-controlled elements of the DSN. They are also part of the GIG because users can originate and receive DSN calls. PBXs are therefore subject to all interoperability requirements of the GIG. There are two categories of DSN PBX switches, Type 1 and Type 2.

a. PBX Type 1. PBX Type 1 has MLPP capabilities. Based on mission requirements, this switch may serve those non-C2 users defined as DoD users having a military mission that might receive C2 calls for orders or direction at precedence levels above ROUTINE, even though they do not have a C2 mission for issuing guidance or orders. Special C2 users are not authorized to be served by a PBX1 and must connect to an EO or SMEO.

b. PBX Type 2. PBX Type 2 has no MLPP capabilities and requires one of the network interface as specified in Table l-3. This switch can only serve DoD, non-DoD, non-governmental, and foreign government users having no missions or communications requirement to ever originate or receive C2 communications under existing military scenarios. These users are provided access to the DSN for the economic or policy benefits of the DoD, when it is not in conflict with local Public Telephone and Telegraph (PTT) ordinances. During a crisis or contingency, they may be denied access to the DSN. C2 users and Special C2 users are not authorized to be served by a PBX2.

1.6.7 Remote Switching Unit

The Remote Switching Unit (RSU) is a switching function integral to the DSN (and part of the GIG). The RSU may be used to provide different functions: EO/SMEO or PBX. If used as an EO/SMEO the RSU must meet all the requirements of an EO/SMEO, and be connected via the host-remote link to a DSN Backbone SA or MFS. If used as a PBX the RSU must meet all the requirements of a PBX, and be connected via a host remote-link to an installation EO/SMEO. Mission requirements of the users connected to the RSU dictate site-specific application as an EO/SMEO, or PBX. The RSUs will be tested in conjunction with and without the host switch for interoperability certification. Detailed requirements for the RSU are contained in Section 2.10.2.

1.6.8 Deplovable Voice Exchange

The Deployable Voice Exchange (DVX) is a government-deployed commercial switch with MLPP capabilities used as a temporary solution during rapid deployment situations. A deployable voice exchange is connected to the DSN using gateway trunks routed through a STEP/Teleport location. Detailed requirements for the DVX are contained in Appendix 2.

SECTION 2 - Capabilities and Features

2.0 Introduction

This section defines GSCR switching system capabilities and features. All features and capabilities listed in this section are not required for all DSN switching systems. The applicability of a particular capability or feature to a type of switch is shown in brackets at the start of each feature description and is summarized in Appendix 1.

2.1 Features Common to Single Users and Business Customers

Features common to residence and business customers are based on features found in Telcordia Technologies GR-520-CORE, *Features Common to Residence and Business,* Issue 1, June 2000.

2.1.1 Individual Line

[Required: EOS, MFS, SMEO, PBX1, PBX2] An individual line is a line arranged to serve only one main station, although additional stations may be connected to the line as extensions of the main station. The system shall be capable of automatically identifying the Directory Number (DN) assigned to a line based on the originating appearance to the system. Service-related features such as manual originating, dial pulse dialing, or DTMF dialing assigned to individual lines may vary from line to line in a switch.

2.1.2 CLASS SM Feature: Selective Call Rejection

[Conditional: EOS, MFS] This feature is conditional because it interacts with MLPP. DSN calls above ROUTINE shall not be rejected if this feature is activated. Procuring agencies specifying this feature shall supply the rejection announcement for their local customers. Selective Call Rejection (SCR) allows customers to block subsequent calls from a calling DN after receiving a harassing call. After receiving an undesired call, the customer dials a code that places the last calling party's DN on a list for rejection. Subsequent calls from the rejected party are intercepted and routed to an announcement. Selective call rejection also enables customers to enter additional DNs onto the list.

If this feature is provided, it shall be in accordance with Telcordia Technologies GR-2 1 S-CORE, *CLASS^{SM} Feature: Selective Call Rejection,* Issue 1, June 2000.

2.1.3 Denied Originating Service

[Conditional: EOS, MFS, SMEO, PBX1] This feature is conditional because C2 users could be denied originating service. The feature does not directly interact with MLPP, but operational controls must ensure that C2 users are not denied originating service.

Denied originating is a system feature that provides the capability to selectively deny call originations to individual lines.

If this feature is provided, it shall be in accordance with Telcordia Technologies GR-562-CORE, *Manual Line Features,* Issue 1, June 2000.

2.1.4 Code Restriction and Diversion

[Required: EOS, MFS, SMEO – Conditional: PBX1] Code restriction and diversion destination limitations on calls provide originated at designated lines to specified codes (ie., to include Numbering Plan Area).

2.1.5 Call Waiting Features

2.1.5.1 Call Waiting (CW)

[Conditional: EOS, SMEO, MFS, PBX1] This feature is conditional because it interacts with MLPP. MLPP interaction specifications are found in Section 3 of this GSCR. The switch must provide the DSN precedence call waiting tone.

CW is a feature whereby a line in the talking state is alerted by a call waiting tone when another call is attempting to complete to that line. The call waiting tone is only audible to the line with the CW feature activated. Audible ringing is returned to the originating line. The service also provides a hold feature that is activated by a switchhook flash. Consecutive flashes allow the customer (with the service activated) to alternately talk to the original and the new calling party. If the customer with the service activated hangs up while one party is on hold, the customer with the service activated is automatically rung back, and upon answer is connected to the held party.

If this feature is provided, it shall be in accordance with Telcordia Technologies GR-571-CORE, *Call Waiting,* Issue 1, June 2000.

2.1.5.2 Cancel Call Waiting

[Conditional: EOS, MFS, SMEO, PBX1] This feature is conditional because it is required when call waiting is active. The user must be able to cancel call waiting service. Cancel call waiting is a feature that allows the customer with CW service to inhibit the operation of CW for one call. The customer dials the cancel call waiting code, obtains recall dial tone, and places a call normally. During this call, CW service shall be inactive so that anyone calling the CW customer shall receive the normal busy treatment, and no CW tones shall interrupt the customer's call.

If this feature is provided, it shall be in accordance with Telcordia Technologies GR-572-CORE, *Call Waiting,* Issue 1, June 2000.

2.1.6 Three-Way Calling (TWC)

[Conditional: EOS, MFS, SMEO, PBX1] This feature is conditional because it interacts with MLPP. See Section 3, paragraph 3.8.5 for specific MLPP interaction requirements.

TWC is a feature that allows a station in the talking state to add a third party to the call without operator assistance. To add a third party to the call, the TWC customer flashes the switchhook once

to place the other party on hold, receives recall dial tone, dials the third party's telephone number, and then flashes the switchhook again to establish the TWC connection. The second switchhook flash may occur any time after the completion of dialing. After the TWC connection has been established, the customer with the service activated may disconnect the last party added by a single switchhook flash or depressing a feature key. The customer with the service activated may terminate the TWC call by disconnecting. If either of the other two parties hangs up while the service-activating customer remains off-hook, the TWC is returned to a two-party connection between the remaining parties.

If this feature is provided, it shall be in accordance with Telcordia Technologies GR-577-CORE, *Three-Way Calling,* Issue 1, June 2000.

2.1.7 Add-On Transfer and Conference Calling Features

[Conditional: EOS, MFS, SMEO, PBX1] Add-On Transfer and Conference Calling features are conditional because they interact with MLPP.

The feature set provides the user with the capabilities to handle more than one call at a time on a given line. The capability to hold a call and originate an additional call (Call Hold); the capability to form a three-way conference ((add-on)TWC); the capability to redirect a call to another line (Call Transfer); and the capability to create a larger conference (Conference Calling Six Way Station Controlled) shall be included in this feature.

If this feature is provided, it shall be in accordance with Telcordia Technologies GR-579-CORE, *Add-on Transfer and Conference Calling Features,* Issue 1, June 2000. References to the PSTN in GR-579-CORE are interpreted as the DSN.

2.1.7.1 Call Transfer Individual - All Calls

[Conditional: EOS, MFS, SMEO, PBX1] This feature is conditional because it interacts with MLPP. See Section 3, paragraph 3.8.3 for specific MLPP interaction requirements.

If this feature is provided, it shall be in accordance with Telcordia Technologies GR-579-CORE, *Add-on Transfer and Conference Calling Features,* Issue 1, June 2000.

2.1.7.2 Call Transfer - Internal Only

[Conditional: EOS, MFS, SMEO, PBX1] This feature is conditional because it interacts with MLPP. See Section 3, paragraph 3.8.3 for specific MLPP interaction requirements. This service is a restricted form of the Call Transfer - All Calls feature but does not allow transfer to lines reached via the network.

If this feature is provided, it shall be in accordance with Telcordia Technologies GR-579-CORE, *Add-on Transfer and Conference Calling Features,* Issue 1, June 2000.

2.1.7.3 Call Transfer -Individual - Incoming Only/Add-on Consultation Hold– Incoming Only

[Conditional: EOS, MFS, SMEO, PBX1] This feature is conditional because it interacts with MLPP. See Section 3, paragraph 38.3 for specific MLPP interaction requirements. Call Transfer - Individual - Incoming Only/Add-on Consultation Hold – Incoming Only is a version of Call Transfer Individual- All Calls that may be applied only to calls incoming to the Business Group from the network.

If this feature is provided, it shall be in accordance with Telcordia Technologies GR-579-CORE, *Add-on Transfer and Conference Calling Features,* Issue 1, June 2000.

2.1.7.4 Call Transfer – Outside

[Conditional: EOS, MFS, SMEO, PBX1] This feature is conditional because it interacts with MLPP. See Section 3, paragraph 3.8.3 for specific MLPP interaction requirements. Call Transfer-Outside is a version of Call Transfer Individual-All Calls to transfer call to lines reached via the network.

If this feature is provided, it shall be in accordance with Telcordia Technologies GR-579-CORE, *Add-on Transfer and Conference Calling Features,* Issue 1, June 2000.

2.1.7.5 Call Transfer-Add-on to Fully Restricted Station

[Conditional: EOS, MFS, SMEO, PBX1] This feature is conditional because it interacts with MLPP. See Section 3, paragraph 3.8.3 for specific MLPP interaction requirements. Call Transfer-Add-on to a Fully Restricted Station allows consultation with a fully restricted station on a call incoming or outgoing from the Business Group, but it restricts conference and transfer capabilities to situations in which the original call would have been allowed for fully restricted line.

If this feature is provided, it shall be in accordance with Telcordia Technologies GR-579-CORE, *Add-on Transfer and Conference Calling Features,* Issue 1, June 2000.

2.1.7.6 Call Transfer Attendant

[Conditional: EOS, MFS, SMEO, PBX1] This feature is conditional because it interacts with MLPP. See Section 3, paragraph 3.8.3 for specific MLPP interaction requirements. Call Transfer Attendant provides a restricted transfer capability. Only calls incoming to the Business Group from the network may be transferred, and only to the Business Group Attendant. Users can reach the attendant to request the transfer by either flashing, or flashing and dialing 0.

If this feature is provided, it shall be in accordance with Telcordia Technologies GR-579-CORE, *Add-on Transfer and Conference Calling Features,* Issue 1, June 2000.

2.1.7.7 Call Hold

[Conditional: EOS, MFS, SMEO, PBX1] This feature is conditional because it interacts with MLPP. See Section 3, paragraph 3.8.4 for specific MLPP interaction requirements. Call Hold provides the capability for the user to hold a call for an extended period and then return to the call, with or without making another call.

If this feature is provided, it shall be in accordance with Telcordia Technologies GR-579-CORE, *Add-on Transfer and Conference Calling Features,* Issue 1, June 2000.

2.1.7.8 Conference Calling - Six Way Station Controlled

[Conditional: EOS, MFS, SMEO, PBX1] This feature is conditional because it interacts with MLPP. See Section 3, paragraph 3.8.5 for specific MLPP interaction requirements. Conference Calling – Six Way allows the user to establish a conference call involving up to six conferees (including the user). This feature is requested via an Access Code.

If this feature is provided, it shall be in accordance with Telcordia Technologies GR-579-CORE, *Add-on Transfer and Conference Calling Features,* Issue 1, June 2000.

2.1.8 Call Forwarding Features And Call Forwarding Subfeatures

2.1.8.1 Call Forwarding Variable

[Conditional: EOS, MFS, SMEO, PBX1] This feature is conditional because it interacts with MLPP. See Section 3, paragraph 3.8.2.1 for specific MLPP interaction requirements.

With this feature, Routine calls attempting to terminate to a line are redirected to another customer-specified line served by the same office or by another office for DSN and/or commercial. The customer activates and deactivates the forwarding function and specifies the desired terminating address (DSN and/or commercial) during each activation procedure. When activated, calls forwarded while the line is idle cause a short (about 0.5 second) ring on the forwarding line as a reminder that the service is active. The user cannot answer call while this feature is active, but can originate calls.

If this feature is provided, it shall be in accordance with Telcordia Technologies GR-580-CORE, *Call Forwarding Variable,* Issue 1, June 2000.

2.1.8.2 Call Forwarding Busy Line (CFBL)

[Conditional: EOS, MFS, SMEO, PBX1] This feature is conditional because it interacts with MLPP. See Section 3, paragraph 3.8.2.1 for specific MLPP interaction requirements.

CFBL provides the capability to associate with a given line another line to which calls shall be forwarded when the given line is busy. This capability applies to lines within the same business group, within the same switch, or within the network.

If this feature is provided, it shall be in accordance with Telcordia Technologies GR-586-CORE, *Call Forwarding Subfeatures,* Issue 1, June 2000.

2.1.8.3 Call Forwarding: - Don't Answer - All Calls

[Conditional: EOS, MFS, SMEO, PBX1] This feature is conditional because it interacts with MLPP. See Section 3, paragraphs 3.8.2.1 & 3.8.2.2 for specific MLPP interaction requirements.

This feature allows calls terminating to an idle station to ring that station a customer-specified number of ringing cycles and, if the call is not answered, to route to another station within the same switching system. If the station to which the call is to be routed is busy, the original station continues to ring until the originator of the call abandons or the call is answered.

If this feature is provided, it shall be in accordance with Telcordia Technologies GR-586-CORE, *Call Forwarding Subfeatures,* Issue 1, June 2000.

2.1.8.4 CLASS^{SM} Feature: Selective Call Forwarding

[Conditional: EOS, MFS, SMEO, PBX1] This feature is conditional because it interacts with MLPP. See Section 3, paragraphs 3.8.2.1 & 3.8.2.2 for specific MLPP interaction requirements.

Selective Call Forwarding (SCF) allows customers to have only calls from selected calling parties forwarded. The SCF customer specifies the callers who are to receive special treatment by including their DNs on a screening list. If a call is placed from a DN on the customer's SCF screening list, the call shall be forwarded to the remote station.

If this feature is provided, it shall be in accordance with Telcordia Technologies GR-217-CORE, *CLASS^{SM} Feature: Selective Call Forwarding,* Issue 1, June 2000.

2.1.9 Call Pick-Up Features

2.1.9.1 Call Pick-Up

[Conditional: EOS, MFS, SMEO, PBX1] This feature is conditional because it interacts with MLPP. See Section 3, paragraph 3.8.6 for specific MLPP interaction requirements.

A station may answer a call that has been terminated to another station in its common call pick-up group in a business group. This is accomplished by dialing a pick-up access code while the called station is being rung. If more than one station in the group is being rung, the station that has been ringing longer shall be picked up first.

If this feature is provided, it shall be in accordance with Telcordia Technologies GR-590-CORE, *Call Pickup Features,* Issue 1, June 2000.

2.1.9.2 Directed Call Pick-Up

[Conditional: EOS, MFS, SMEO, PBX1] This feature is conditional because it interacts with MLPP. See Section 3, paragraph 3.8.6 for specific MLPP interaction requirements.

Directed call pick-up permits a user to dial a code and station number and pick up a call that has been answered or is ringing at another telephone, provided the rung telephone permits dial pick-up. If the other station has answered, a Three Way Call (TWC) is established.

If this feature is provided, it shall be in accordance with Telcordia Technologies GR-590-CORE, *Call Pickup Features,* Issue 1, June 2000.

2.1.9.3 Directed Call Pick-Up without Barge-In

[Conditional: EOS, MFS, SMEO, PBX1] This feature is conditional because it interacts with MLPP. See Section 3, paragraph 3.8.6 for specific MLPP interaction requirements.

This feature is identical to the directed call pick-up feature, except that if the line being picked up has already answered, the party dialing the pick-up code shall be routed to reorder rather than be permitted to barge in on the established connection to create a TWC.

If this feature is provided, it shall be in accordance with Telcordia Technologies GR-590-CORE, *Call Pickup Features,* Issue 1, June 2000.

2.2 Attendant Features

Attendant features in this section apply to attendant consoles that are provided with the local switch and/or centralized attendant services.

2.2.1 Precedence and Preemption

[Required: MFS, EOS – Conditional: SMEO, PBX1] The attendant console shall interoperate with Multi-level precedence and preemption (MLPP) as described in section 3. The console shall be able to initiate all levels of precedence calls (ROUTINE through FLASH-OVERRIDE).

2.2.2 Call Display

[Required: MFS, EOS – Conditional: SMEO, PBX1] The attendant console shall provide a visual display of the calling number, class of service and precedence level for incoming direct dialed calls and diverted calls to the attendant.

2.2.3 Class of Service Override

[Required: MFS, EOS - Conditional: SMEO, PBXl] The attendant shall provide the capability to override any class of service (calling area or precedence) of the calling party on a call-by-call basis.

2.2.4 Busy Override and Busv Verification

[Required: MFS, EOS - Conditional: SMEO, PBX1] The attendant shall have the capability to override a busy line condition. If the called line being verified is busy, off-hook supervision shall be given to the attendant performing the busy verification. When a verification code is used, all digits of the code must be dialed before cut-through to the line can be accomplished. Connections to commercial Central Office access lines shall be restricted from busy verification access. The attendant shall have the capability to enter an existing busy line to inform the user of an incoming call. An override tone shall be provided to the busy line prior to the attendant entering the conversation, and the tone shall be repeated periodically as long as the attendant is connected. Selected stations may be classmarked to deny attendant break-in. In particular, it shall be possible to classmark the lines of selected stations (e.g., all data and secure voice) to preclude the busy verification or busy override being applied to the selected station lines.

2.2.5 Night Service

[Required: MFS, EOS - Conditional: SMEO, PBX1] The attendant console shall have the ability to route all calls normally directed to the console to a night service deflection. The night service deflection shall be a fixed or manually selected directory number.

2.2.6 Automatic Recall of Attendant

[Required: MFS, EOS - Conditional: SMEO, PBX1] When an attendant extends a call to a station that is busy or does not answer within a preset time, the extended party shall be automatically recalled to the console. Recalls shall be transferred to the console that originally processed the call. If that console is busy, the recall shall be placed into the console queue; but if the console is out of service, the recall shall be routed to another console.

2.2.7 Calls in Queue to the Attendant

[Required: MFS, EOS - Conditional: SMEO, PBX1] The attendant console shall have the capability to place calls in a waiting queue. Calls placed in queue to the attendant console shall be retrieved by the attendant in order of precedence level (FLASH-OVERRIDE first, ROUTINE last) and longest holding time. Calls in queue shall not be lost when a console is placed out of service or forwarded to night service deflection. When the console is placed out of service or forwarded to night service while calls are in queue the console shall be capable of one of the following solutions.

1. All calls in queue shall be forwarded to first the centralized attendant, then night service.
   OR

2. All subsequent calls placed to the attendant console shall be forwarded to first the centralized attendant, and then night service. The attendant console shall be able to answer all remaining calls in queue preventing any calls from being lost.

2.2.8 Release to Pivot for Operator Services.

[Required: MFS, EOS - Conditional: SMEO, PBX1] This capability shall conform to SR-2275 Telcordia Notes on the Networks Issue 4 Signaling October 2000 and FSD 30-33-0000 Release To Pivot Network Capability. Release To Pivot (RTP) Network Capability is a network routing capability that consists of a collection of call setup procedures that provides flexibility to an TS, MFS, EO type switch to determine conditions for either forwarding a call or releasing it back to a previous switch in the call path. RTP is a network capability that is invoked in support of service or business needs, and not directly by an end user. The Release to Pivot network capability permits an operator services switch, once it has determined a new destination for the call, to have the connection established from the originating switch. The basic capability allows any switch to indicate to switches farther forward in the call path that it has the ability to pivot the call. An application that determines the new destination for the call (in this case, the operator services switch) can then release the call with a Redirection Number parameter containing the address of the new destination. The Pivot switch (in this case, the originating switch) will not terminate the call on receipt of the Release message, but will pass the call forward toward the new destination. The result is that the Release switch (which determined the new destination) saves an incoming and an outgoing trunk relative to the case where the call is forwarded to the new destination. Basic Release to Pivot uses the SS7 to perform the following:

- Redirect Capability parameter to indicate support for the capability
- Redirect Counter parameter to prevent looping of a call among a set of switches invoking the capability
- Release Cause value 23 to indicate Release to Pivot caused the Release. (Other values are also allowed.)

Additional SS7 parameters have been defined to allow future expansion of the useof Release to Pivot by operator services, including:

- Redirect Status parameter to allow the operator system to acknowledge receipt of the offer to perform Release to Pivot from the originating switch.
- Redirect Forward Information parameter to carry additional information in the forward direction.
- Redirect Backward Information parameter to carry additional information in the backward direction.

2.3 Customer Access Interfaces

2.3.1 PBX Line

[Required: MFS, EOS - Conditional: SMEO, PBX1] This interface is conditional because it is not required for all DSN switches and recognizes that PBXs may be interfaced with DSN switches

using other interfaces. Each MILDEP acquisition agent is responsible for specifying the type of PBX interfaces required at the base, camp, post, station, or facility location.

A PBX line (PBX-Stored Program Controlled Switching System [SPCS] line) is a line appearance at the local switching system that permits connection to a customer premise switching system. The connecting facility may be l- or 2-way and it may be loop start or ground start. A PBX line is like an individual line except for ringback, power cross test, and permanent signal treatment.

If this feature is provided, it shall be in accordance with Telcordia Technologies GR-524-CORE, *PBX Line,* Issue 1, FSD 04-01-0000, June 2000.

2.3.2 Direct Inward Dialing (DID)

[Required: MFS, EOS - Conditional: SMEO, PBX1] This interface is conditional because it is not required for all DSN switches and recognizes that PBXs may be interfaced with DSN switches using other interfaces. Each MILDEP acquisition agent is responsible for specifying the type of PBX interfaces required at the base, camp, post, station, or facility location.

DID is a feature that allows an incoming call to reach a specific PBX station line without attendant assistance. With DID, the switch seizes a DID trunk and outpulses the station line number to the PBX. If the called station's line is idle and not restricted from receiving terminating calls, the PBX alerts the called station and returns audible ringing on the incoming connection. If the called station's line is busy, the PBX returns busy tone. If the called station is restricted from receiving terminating calls, the PBX routes the incoming call to an announcement, reorder tone, or to the attendant.

If this feature is provided, it shall be in accordance with Telcordia Technologies GR-524-CORE, *PBX Line,* Issue 1, FSD 04-02-0000, June 2000.

2.3.3 National ISDN 1/2 Basic Access

[Required: EOS, MFS, SMEO - Conditional: PBX1, PBX2] The switch shall include both S/T and U interfaces for ISDN Basic Access. The ISDN Basic Access interface allows the simultaneous transmission of voice, circuit-switched data, and packet data over a single customer line connecting CPE and a digital switch. Specifically, the ISDN Basic Access allows the provision of two 64-kbps B channels, which may be used to carry voice, circuit-switched data, or packet data, and a 16-kbps D channel, which can carry signaling and packet information.

Requirements for this feature shall be in accordance with Telcordia Technologies references SR-NWT-002120 Issue 1 May 1992 with revision 1, June 1993, SR-NWT-002343, and TR-NWT-001268 Issue 1 December 1991.

2.3.4 National ISDN 1/2 Primary Access.

[Required: TS, EOS, MFS, SMEO, PBX1 - Conditional: PBX2] The ISDN Primary Access interface is an ISDN user-network interface in which the interface structure is composed of multiple B-channels and one D-channel. The bit rate of the D-channel in this structure is 64 kbps. When a 1544-kbps primary rate interface is provided, the interface structure is 23B+ D.

Requirements for this feature shall be in accordance with Telcordia Technologies references SR-NWT-002 120 Issue 1 May 1992 with revision 1, June 1993, SR-NWT-002343, and TR-NWT-001268 Issue 1 December 1991.

2.3.5 Analog Line

[Required: EOS, MFS, SMEO, PBX1 - Conditional: PBX2] This interface is required for all DSN switches.

Requirements for this feature shall be in accordance with Telcordia Technologies GR-5 1 O-CORE, *System Interfaces,* Issue 1, June 2000.

2.4 Public Safety Features

2.4.1 Basic Emergency Service (911)

[Conditional: EOS, MFS, SMEO, PBX1, PBX2] The basic 911 emergency service feature provides a 3-digit universal telephone number (911) that gives the public direct access to an emergency service bureau, usually without charge to the calling subscriber. The emergency service is one-way only, terminating to the service bureau. The emergency service bureau is usually located within a police department, although in some communities it is located in a fire department or in an independent agency serving as a communications center. A given local switching system shall serve no more than one emergency service bureau. When the originating line and the emergency service bureau are served by the same switching system, the bureau has the capability of holding and disconnecting the connection and monitoring the supervisory state, and ringing the originating station back. When the local switching system is in an area with expanded emergency service (E911) served through a tandem switch, the emergency call is advanced to the tandem switch with calling line Automatic Number Identification (ANI).

If this feature is provided, it shall be in accordance with Telcordia Technologies GR-529-CORE, *Public Safety,* Issue 1, June 2000.

2.4.2 Tracing of Terminating Calls.

[Required: EOS, MFS, SMEO – Conditional: PBX1] This feature identifies the calling number on intraoffice calls or the incoming trunk on incoming calls for calls terminating to a specified DN. When this feature is activated, the originating DN or incoming trunk number, terminating DN, and the time and date are printed out for each call to the specified line.

Requirements for this feature shall be in accordance with Telcordia Technologies GR-529-CORE, *Public Safety,* Issue 1, June 2000, FSD 15-03-0000.

2.4.3 Outgoing Call Tracing.

[Required: EOS, MFS, SMEO – Conditional: PBX1] This feature allows the tracing of nuisance calls to a specified DN suspected of originating from a given local office. The tracing is activated when the specified DN is entered. A printout of the originating DN, outgoing trunk number, or terminating number, and the time and date, are generated for every call to the specified DN.

Requirements for this feature shall be in accordance with Telcordia Technologies GR-529-CORE, *Public Safety,* Issue 1, June 2000, FSD 15-03-0000.

2.4.4 Tandem Call Trace.

[Required: EOS, MFS, SMEO, TS] This feature identities the incoming trunk of a tandem call to a specified office DN. The feature is activated by entering the specified distant office DN for a tandem call trace. A printout of the incoming trunk number and terminating DN, and the time and date, is generated for every call to the specified DN.

Requirements for this feature shall be in accordance with Telcordia Technologies GR-529-CORE, *Public Safety,* Issue 1, June 2000, FSD 15-03-0000.

2.4.5 Trace of A Call in Progress.

[Required: TS, EOS, MFS, SMEO] This feature identifies the originating DN or incoming trunk for a call in progress. The feature is activated by authorized personnel entering a request that includes the specific terminating DN or trunk involved in the call.

Requirements for this feature shall be in accordance with Telcordia Technologies GR-529-CORE, *Public Safety,* Issue 1, June 2000, FSD 15-03-0000.

2.5 Trunk, Line, and Special Service Circuit Service Test Features

The majority of the capabilities listed in this section do not have a Feature Service Description (FSD) in the LSSGR. These capabilities are definitions only in Section 2 of the LSSGR. However, the capabilities may be provided on a local basis to enhance assured services.

2.5.1 Local Office Test Lines

Test lines shall be provided for testing lines and incoming trunks from connecting offices. The transmission test lines listed in the following text may also be used for tandem applications.

2.5.1.1 100-Type Test Line

[Required: TS, EOS, MFS – Conditional: SMEO] A 100-type test line provides a local office with equipment that first applies a precise (1004 Hz at 1 mW) tone for a timed period, then a

balanced termination for transmission level and noise measurements. Line and trunk access shall be provided to the 100-type test line.

2.5.1.2 101-Type Test Line

[Required: TS, EOS, MFS – Conditional: SMEO] A 101-type test line provides a communication line to a craftsperson's position.

2.5.1.3 102-Type Test Line

[Required: TS, EOS, MFS – Conditional: SMEO] A 102-type test line applies a precise (1004 Hz at 1 mW) tone for approximately 9 seconds on, 1 second off, in a repetitive sequence.

2.5.1.4 105-Type Test Line

[Required: TS, EOS, MFS – Conditional: SMEO] A 105-type test line, with responder, provides for automatic two-way loss and noise measurements, plus gain slope, return loss, and noise in the presence of tone-on trunks requiring transmission testing.

2.5.1.5 Synchronous Test Line

[Required: TS, EOS, MFS – Conditional: SMEO] A synchronous test line provides diagnostic tests of incoming trunk equipment. A total of six supervisory pulses are returned.

2.5.1.6 Non-synchronous Test Line

[Required: TS, EOS, MFS – Conditional: SMEO] A nonsynchronous test line tests incoming trunk equipment. Supervisory pulses are repeated until disconnection takes place.

2.5.1.7 Permanent Busy Test Line

[Required: TS, EOS, MFS – Conditional: SMEO] A permanent busy test line shall return a permanent busy signal.

2.5.1.8 108-Type Test Line

[Required: TS, EOS, MFS – Conditional: SMEO] A 1 OS-type test line provides a non-inverting loopback for digital testing between digital exchanges and/or digital PBXs. The test line accepts and loops back received octets that are retransmitted so that the positions of the bits within the octets are preserved. All digital services (e. g., 56 kbps, 64 kbps restricted, and 64 kbps clear) can pass digital test signals over this test line.

2.5.2 Outside Plant Test Lines

2.5.2.1 Dialable Cable Pair Locator Tone

[Conditional: EOS, SMEO, MFS] The Dialable Cable Pair Locator Tone is a feature designed to give the field technician the capability via a secured dial-up access to apply identification tone to a single subscriber loop. This eliminates the involvement of the mainframe personnel in applying the identification tone on working subscriber lines.

If this feature is provided, it shall be in accordance with Telcordia Technologies GR-533-CORE, *Database Services Service Switching Points*, Issue 1, June 2000.

2.5.2.2 DTMF Station Test Circuit

[Required: EOS, MFS – Conditional: SMEO] This circuit provides the capability for an installer (or a customer assisted by test desk personnel) to test the station ringer and directory number line assignment in the Central Office. It shall also be possible to test DTMF stations including 12-button sets and repertory dialers.

2.5.3 Test Incoming Trunks in Tandem or Local State

[Conditional: TS, EOS, SMEO, MFS] The system shall provide the ability to place incoming trunks in the local or tandem state on incoming calls to 100-, 102-, and 105-type test lines. The choice of state shall be based on the DN received from the originating office.

2.5.4 Manual Testing

2.5.4.1 Manual Test of Line

[Required: EOS, MFS – Conditional: SMEO, PBX1] This feature provides a craftsperson at a Trunk Line Workstation (TLWS), or at another local test position interfacing with the switching system, with line maintenance capabilities such as: removing lines from service, restoring lines to service, verifying the status of lines, and accessing lines for basic test capabilities (resistance, leakage and current measurements, and ringing.

2.5.4.2 Manual Test of Trunks

[Required: TS, EOS, SMEO, MFS] This feature provides a craftsperson at a TLWS, or at another local test position interfacing with the switching system, with trunk maintenance capabilities such as: removing trunks from service, restoring trunks to service, verifying trunk states, and accessing trunks for basic test capabilities (resistance, leakage and current measurements, supervisory tests, and Voice Frequency [VF] parameter measurements).

2.5.5 Trunk Group - Remove from Service (Make Busy)

[Required: TS, EOS, SMEO, MFS – Conditional: PBX1] On request from the local test position, the system shall place all idle (not traffic busy) trunks in a specified trunk group in the out-of-service locked out manual or out-of-service disabled manual state requested. Traffic busy trunks are camped-on, and as they become idle, are also placed in the requested state.

2.5.6 Trunk Group - Restore to Service (Make Idle)

[Required: TS, EOS, SMEO, MFS – Conditional: PBX1] On request from the local test position, the system shall provide the ability to restore to service in the idle state all trunks in a specified trunk group that were removed from service by use of the Remove from Service (make-busy) feature.

2.5.7 Carrier Group Alarm (CGA)

[Required: TS, EOS, SMEO, MFS] The system shall provide the capability of detecting a CGA. When this alarm is detected, all associated outgoing trunks shall automatically be made busy to subsequent customer call attempts. Call attempts on associated incoming trunks shall not be processed. When possible, the reverse make busy feature shall be exercised on incoming trunks.

2.5.7.1 Software Carrier Group Alarm

[Conditional: TS, EOS, SMEO, MFS] This feature is conditional because all switch manufactures may not provide this feature. This feature allows the local switching system to infer the failure of a carrier group from observed call failures on only a few trunks in the trunk group.

2.6 Preset Conferencing

[Required: TS, EOS, MFS - Conditional: SMEO, PBX1] Preset conferencing may be implemented via an external conference bridge. DSN TS, EOS and MFS systems shall be able to support conference bridges and the following preset conference requirements.

- Ten (10) separate bridges with each bridge having the capacity for one originator and twenty (20) conferees.
- Each bridge shall have the capability to function as the "Primary" or "Secondary" or "Alternate" bridge that will interconnects to other bridges that supports up to a maximum of one hundred ninety-one (19 1) conferees using all ten bridges off the same switch for the same conference.
- Preset Conference (abbreviated pool of subscribers/bridges) assignment of abbreviated numbers shall not be greater than twenty (20) switch address numbers per bridge. Such address numbers could be a combination of subscriber lines and other conference bridge access.
- Preset conference network(s) that require more than twenty conferees shall use the cascading bridge method of expanding the number of conferees beyond twenty conferees.
- Each preset conference bridge shall be fully capable of multi-level precedence and preemption access and control. If such a bridge is external then such a bridge must be fully interoperable with the serving switch to permit full MLPP access and control.

Access to preset conference equipment shall be by means of one or more KXX codes assigned solely for this use. A preset conference shall be established as follows:

a. The originating office shall screen the unique KXX office code, and precedence level to protect against unauthorized preset conference usage, and, where authorized, attempt the connection, either locally or by way of ISTs. The KXX conference codes shall be translated as vacant codes on IO-digit calls.

b. The originator of a preset conference shall key the digits KXX-XXXX. This address may be preceded by:

   (1) A route code for choice of data-grade or voice-grade circuits, in the form 1X-KXX-xxxx.

   (2) Access digit and precedence digit for precedence level treatment, in the form 9P-KXX-XXXX, where P is any digit O-4.

   (3) Both the route code and precedence level in the form of 9P-1X-KXX-XXXX.

c. Translation of the 7-digit address shall determine routing to the appropriate switching center to obtain conferencing equipment.

d. At the appropriate switching center, the received address shall be translated to determine the conference group and the desired list of conferee addresses.

e. The number assignments shall be made in accordance with the DSN numbering plan, DISAC 310-255-l.

f. If a called conferee's telephone is not answered, automatic disconnect is to take place within an adjustable interval of 15 to 60 seconds after a bridge leg is first connected to the conferee line.

g. Originators of preset conferences shall have the capability of adding up to five non-programmed conferees(within the 21 conferees capability) to the conference by sequentially keying each add-on address and connecting the conferee to the bridge, by hook flashing, dialing the potential conference and then hook flashing again when the next conferee answers.

2.6.1 Conference Notification Recorded Announcement

[Required: TS, MFS, EOS - Conditional: SMEO, PBX1] When the conference equipment receives the first off-hook supervisory signal from an answering conferee, conference notification recording shall be applied, and shall continue as an audible announcement to answering conferees and to the originator until all conferees answer. The conference notification recording shall automatically be removed 2 seconds after the last conferee answers, indicating, by such removal, that the conferees have all answered and that the conference is ready to begin. The originator shall have the ability to remove the conference notification recording and force the conference via line or trunk by depressing the "A" or "#" key on a Dual Tone Multi-Frequency (DTMF) instrument or a programmed feature key on ISDN or digital instruments. Forcing the conference, prematurely, shall not interfere with attempts to complete the connections to unanswered conferees, or to add-on new conferees.

Where access to secondary and tertiary bridges are necessary in a conference, arrangements shall be made so that the conference notification recordings applied at each bridge are not superimposed.

a. Each bridge shall generate a notification recording that is audible only to those conferees on that bridge.

b. When all conferees on a bridge have answered, the conference notification recording shall be removed automatically from that bridge 2 seconds after the last conferee answers.

c. When the conference notification recording is removed automatically from a bridge, the notification recording from the adjacent bridge, if still continuing, shall then become audible to the originator and to the conferees on the remaining bridge(s).

d. When a conferee disconnects, a conference disconnect tone as described in table 5-5 shall be sent to originator and other conferees in the conference.

2.6.2 Automatic Retrial and Alternate Address

[Required: TS, MFS, EOS - Conditional: SMEO, PBX1] Off-hook supervision shall be returned to the originator from each bridge when all conferees have answered or when the originator has forced the conference prior to all conferees answering. If answer supervision is not returned from any conferee location, within an adjustable interval of 15 to 60 seconds, one automatic retrial shall be made to the primary conferee address.

a. Conferees may be provided with alternate addresses that the switch shall try when the call fails to complete to the primary address.

b. If a call to a primary address fails to complete within two trials, the call shall be directed to an alternate address, if provided, and two call attempts shall be made to the alternate address.

2.6.3 Bridge Release

[Required: TS, MFS, EOS - Conditional: SMEO, PBX1] The releasing of primary, secondary, and tertiary bridges shall occur as follows:

a. The primary bridge shall be released when on-hook supervision is received on the originating port of the primary bridge or on all of the other conference bridge ports.
b. If on-hook supervision is received on the originating port of secondary or tertiary bridges, all subsequent connections and equipment shall be released.
c. A conference bridge shall be released after all attempts at call completion are made and no answers are received on all ports.
d. Release of conference bridges shall be such that it shall be impossible for the bridges to become locked together.

2.6.4 Lost Connection to Conferee or Originator

[Required: TS, MFS, EOS - Conditional: SMEO, PBX1] If a connection to a conferee is lost, due to disconnection or preemption, a distinctive disconnect signal, defined as a conference disconnect tone, shall be provided to the conference originator and all conferees. If the originator is lost or preempted, the bridge shall be held up long enough for a preempt tone to be given to all conferees. (See table 5-5)

2.6.5 Secondary Conferencing

[Required: TS, MFS, EOS - Conditional: SMEO, PBX1] The switch shall provide the capability of secondary conferencing, which is the ability to interconnect conference bridges located at separate DSN switches.

a. When a conference is activated and two or more of the addressees require a secondary bridge, the address shall be processed in the normal manner and directed toward the office serving the secondary equipment.
b. The conference equipment shall be designed so that it may be used alternatively for primary or secondary conferences.
c. Identical operational features, such as application and removal of the conference notification recorded announcement, shall be provided for both primary and secondary conferences.

2.7 Address Translation

[Required: TS, EOS, MFS - Conditional: SMEO, PBX1] Translation of the 7-digit conference address shall be as follows:

a. The switch shall have the capability to translate three digits of the switch code.

b. The first two digits of the four-digit line number may be utilized to identify the switching center at which conferencing equipment is located.

The four-digit line number shall be translated to indicate the particular preset conference arrangement.

2.8 Nailed-Up Connections

[Required: TS, EOS, MFS, - Conditional: SMEO, PBX1] Nailed-up connections are intended for special use, providing a permanently established path through a switch for either a network circuit (trunk) or a special service facility. The DSN switching system shall provide the following functionality for nailed-up connections:

a. DSN switches shall provide the capability of establishing nail-up connections through the switch.

b. It shall be possible to establish a nailed-up connection between any two like (ie., Pulse Code Modulation (PCM) on line type) terminations on a DSN switch.

c. The nailed-up connections shall be capable of providing a direct interface to PCM transmission facilities terminating directly on the DSN switch at the standard PCM-24 DS1 level of 1.544 Mb/s and the PCM-30 level of 2.048 Mb/s supporting both Channel Associated Signaling (CAS) and Common Channel Signaling (CCS).

d. Supervision received at one side of the nailed-up connection shall be repeated at the other end. This applies to analog-to-digital and digital-to-digital connections.

e. All nailed-up connections through the switch shall be monitored by the normal maintenance routines to ensure proper operating paths through the switch. In the event that a PCM switching network fault affects a nailed-up connection, the system shall automatically reconfigure the connection around the fault.

f. The DSN switch shall be capable of "nailing-up" at least 10 percent of the switch's circuits.

g. Nailed-up connections shall not be pre-emptable.

2.9 Assured Dial Tone

[Required: TS, EOS, MFS, SMEO - Conditional: PBX1] CJCSI 6215.01B mandates non-blocking service for FLASH and FLASH OVERRIDE users. In order to meet this requirement FLASH and FLASH OVERRIDE users shall receive dial tone at all times. The switch shall provide assured dial tone on a minimum of 3 percent of all station lines.

Requirements for this feature shall be in accordance with Telcordia Technologies GR-5 12-CORE, *Reliability,* Issue 2, January 1998, Section 12.

2.10 DSN Remote Switch Unit (RSU) Requirements

2.10.1 Introduction

The DSN RSU is a telecommunications switch that is connected to and dependent upon a host switch (EOS, MFS, or SMEO) for some or all centralized operations, administrative and maintenance capabilities. The RSU is connected to the host switch by an umbilical line/trunk and must be implemented IAW Figure l-2 DSN Architecture and Components. An RSU used on-premise with its Host switch can be designated as on-premise PBX switch. The umbilical line/trunk is usually based on PCM-24 (T1) or PCM-30 (El) transmission but is proprietary to each switch manufacturer. The requirements for a DSN RSU are as follows.

2.10.2 Normal Operating Condition -- Connected To The Host

Normal operating condition is defined as when the umbilical line/trunk is fully connected to the host switch and neither the host nor the RSU is in a degraded condition (as described in 2.10.3). During normal operating conditions the RSU shall provide the same user features as an EOS, SMEO, or PBX depending on how it is being used in the network. This means that the RSU must provide full DSN service as well as local intra-RSU service. The RSU in normal operating conditions shall meet the normal operating condition requirements of FSD 30-23-0000, Issue 1, June 2000, which is a module of GR-532-CORE.

If used as End Office, a remote switching unit in the normal mode must provide physical diverse routing to its associated host switch and have direct trunking to the local commercial telephone network.

2.10.3 Degraded Operating Conditions

There are two degraded conditions that are described in GR-532-CORE Section 3.7.3. These conditions are: (1) Stand-Alone, when the host link unbilical has been severed; and (2) Partial Stand-Alone, when the host link umbilical is saturated with traffic or the host link is partially "out-of-service".

2.10.3.1 Stand-Alone Condition

When the umbilical links between the host and the RSU are completely severed, the requirements of FSD 30-23-0000, Issue 1, June 2000, which is a module of GR-532-CORE, for standalone operation shall apply, with the exception that the collection of Automated Message Accounting (AMA) data is not required.

Furthermore, MLPP functionality is required, unless Joint Staff validates that the C2 Users behind or on that switch do not require MLPP in stand-alone mode.

2.10.3.2 Partial Stand-Alone Condition

The RSU requirements when the umbilical links to the host switch are saturated are:

1. The RSU shall provide the requirements for Partial Standalone defined in GR-532-CORE, FSD 30-23-0000, Issue 1, June 2000.
2. Three percent (3%) of the user lines and umbilical line/trunk capacity shall be able to provide assured dial tone as defined in Paragraph 2.9.
3. Normal MLPP functionality, in accordance with Section 3, shall be provided via the umbilical lines/trunks.

2.11 Control of Precedence Calls

[Conditional: MFS] The Precedence Access Threshold (PAT) mechanism feature is described below and may be provided in order to control the number of simultaneously outgoing calls for each precedence level and calling area entering the DSN. All access lines shall be capable of being classmarked for/not for PAT screening.

2.11.1 Precedence Access Threshold (PAT)

[Conditional: MFS] The software controlled PAT mechanism which shall limit the number of simultaneous calls originated by selected user stations, interswitch trunk groups, attendant consoles and other designated switch termination's whose traffic input to the DSN requires screening. The PAT mechanisms shall allow termination of each application, (e.g. user station, attendant positions, or special switch interfaces to users/networks) whose traffic needs to be screened. The switch shall provide a minimum of seven (7) PAT mechanisms. Each PAT mechanism shall accommodate any number of the switch's terminations and any combination of those terminations. The switch shall be equipped, through classmarks, to assign any PAT mechanism to any switch termination or conversely, any switch termination to any PAT mechanism. It shall be possible to classmark any switch termination as subject to PAT mechanism restrictions or not subject to PAT mechanism restrictions.

2.11.1.1 Call Screening

[Conditional: MFS] Outgoing calls shall be screened by classmark prior to being presented to the appropriate PAT mechanism. The classmark screening shall determine whether or not the outgoing call shall be presented to the PAT mechanism based on a comparison of the dialed address with the calling user's class of service privileges including precedence, calling area, route code, zone restriction, and Community of Interest (COI) classmarks. Outgoing calls which successfully pass all tests shall be presented to the appropriate PAT mechanism. Calls which fail one or more of the tests shall be rejected and given the proper signal and/or announcement.

2.11.1.2 Functional Structure

[Conditional: MFS]

a. Each PAT mechanism shall functionally consist of a set of Precedence Level/Calling Area (PL/CA) thresholds, a summation-of-thresholds count, and a total-calls-in-progress counter. The total-calls-in-progress counter shall count all calls in progress that were permitted by the PAT mechanism. The summation-of-thresholds count shall register the sum of all threshold levels associated with the PAT mechanism. The PL/CA thresholds place limits on the number of simultaneous calls allowed of a given combination of precedence level and calling area. There shall be five (5) precedence levels (ROUTINE, PRIORITY, IMMEDIATE, FLASH, FLASH OVERRIDE) and five (5) progressively wider calling areas (Al, A2, A3, A4, A5) established. Each PAT mechanism shall have twenty-five (25) PL/CA thresholds. Associated with each of these precedence level and calling area combinations shall be a threshold setting and a calls-in-progress counter that registers the current count of the calls in progress for that precedence level/calling area combination. Each PAT mechanism shall functionally consist of the following elements:

1. A set of 25 PL/CA thresholds

2. A set of 25 calls-in-progress counters. Each calls-in-progress counter is associated with a PL/CA threshold

3. A summation-of-thresholds count

4. A total calls in progress counter

b. The calls-in-progress counter associated with a PL/CA threshold registers the number of calls in progress for that PL/CA combination.

c. The summation-of-thresholds count shall register the sum of the number of simultaneous calls allowed for each PL/CA combinations. This corresponds to summing the PL/CA thresholds.

d. The total-calls-in-progress counter shall register the total number of calls in progress that were permitted by the PAT mechanism

2.11.1.3 Simultaneous Calls Limitation

[Conditional: MFS] Each PAT mechanism shall set the limit on the number of simultaneous calls permitted at each precedence level and calling area combination, subject to permissible overflow conditions specified in Section 2.11.1.4. The simultaneous calls limitation process shall be as follows:

1. A call which is presented to the PAT mechanism shall initially be tested against the PL/CA threshold which has the same precedence level and calling area of the call. The call will be permitted if the threshold setting for that PL/CA is greater than the calls in progress count for that PL/CA. If the call is permitted, the calls-in-progress count for that PL/CA and the total-calls-in-progress counter shall be incremented.

2. If the threshold setting is equal to or less than the calls in progress count for that PL/CA, the call will be tested against the overflow process.

2.11.1.4 Overflow Process

[Conditional: MFS]

a. The functional objective of the overflow process is for calls of lower precedence level and narrower calling area to utilize unused calling capacity of higher precedence level and equal and wider calling area and equal precedence level and wider calling area call types without blocking calls of higher precedence level and wider calling area. The general rule for the overflow process shall be that if a call has not been permitted by initial simultaneous-calls-limitation testing, as specified in Section 2.11.1.3, the call will be permitted if the three following conditions are met:

1. The sum of the threshold settings of the PL/CAs with equal and higher precedence levels and equal and wider calling areas than the call is greater than the sum of the calls-in-progress counts of the PL/CAs with equal and higher precedence levels and equal and wider calling areas than the call; and

2. The summation-of-thresholds count is greater than the total-calls-in-progress count.

3. The PAT algorithm shall never allow any F/FO call to be blocked, dropped, delayed, discarded, suppressed or otherwise mutilated and interfered with in favor of calls of lesser precedence.

b. When a call is permitted due to the overflow procedure, it shall increment the calls-in-progress counter of the PL/CA that has the same precedence level and calling area combination of the call. This entry will be in excess of the quantity permitted by Section 2.11.1.3. It shall also increment the total-calls-in-progress counter.

2.11.1.5 Decrementing the Calls-In-Progress Count

[Conditional: MFS] The appropriate calls-in-progress counter for the PL/CA assignment of the call and the total-calls-in-progress counter shall be decremented when any of the following occur:

1. A call permitted by the PAT mechanism is unable to find an idle or preemptable outgoing trunk during the routing process.

2. A call permitted by the PAT mechanism is preempted or is discontinued for any reason.

2.11.1.6 Call Treatment

[Conditional: MFS]

a. Calls which are permitted DSN access shall search the appropriate DSN trunk groups for idle or preemptable trunks in accordance with normal routing procedures.

b. ROUTINE precedence calls which are denied DSN access by a PAT mechanism shall be provided 120 Impulses per Minute (IPM) busy tone.

c. PRIORITY or higher precedence calls which are denied DSN access by a PAT mechanism shall be provided the Precedence Access Limitation (PALA) recorded announcement (Table 3-l).

2.11.1.7 Queuing

[Conditional: MFS] The switch shall be equipped to provide queuing for the PAT mechanism on both an off-hook and on-hook basis.

1. When off-hook queing is activated, calls shall be held in queue for a minimum of thirty (30) seconds per interval. The holding time shall be programmable and composed of a minimum of five (5) intervals.

2. When on-hook queuing is activated, calls shall be held in queue for a minimum of five (5) minutes per interval. The holding time shall be programmable and composed of a minimum of five (5) intervals. Automatic call-back to the caller shall be initiated after both the PAT mechanism outlet and the needed trunk are available.

3. The switch shall be equipped to permit enabling and disabling either off-hook or on-hook queuing for each PAT mechanism on a local or remote basis.

2.11.1.8 Attendant Calls

[Conditional: MFS] The attendant shall be allowed to upgrade the precedence level and calling area of any call on a per call basis only. After the higher precedence level and calling area has been authorized by the attendant, the call shall be routed through the PAT prior to accessing the DSN. The Call Detail Recording function shall record the escalated precedence level and calling area granted by the attendant. This requirement will insure proper charges for service received.

2.11.1.9 Operational Measurement Registers

[Conditional: MFS] Three operational measurement registers shall be associated with each PL/CA threshold. The first register shall be a peg count of the number of calls offered to the PAT mechanism logic at that precedence level/calling area combination. The second register shall record the number of calls not permitted by the PAT mechanism at that precedence level/calling area threshold combination. The third register shall record the number of calls successfully processed through the PAT mechanism at that precedence level/calling area combination which fail to find an idle or preemptable outgoing trunk.

2.11.1.10 Maintenance and Administration of Thresholds

[Conditional: MFS] Each switch shall be able to establish and change precedence level and calling area threshold settings and calling area restrictions of each PAT mechanism by administrative commands and shall not require switch down time to accomplish. A software log shall be maintained of any changes to the threshold levels for a period of ninety (90) days. An entry shall be automatically made in the log whenever a threshold level or group of threshold levels is changed. Each entry shall record the date and time the threshold levels were changed, the identity of the terminal from which the change was made (with user ID), the threshold levels resulting from the change and identification of personnel that made the change. The Government shall be provided access to these software logs upon request.

2.12 DSN Hotline Service

[Required: MFS, EOS, SMEO] DSN Hotline service shall not be allowed to use the following services:

- Hold (line terminator denied to put call on “HOLD”)
- Three-Way Calling
- Normal Call Transfer
- Electronic Key Telephone System (EKTS)
- Ad-hoc Conferencing

DSN Hotline service shall allow the user to automatically initiate a voice or circuit mode data call to a previously designated user by initiating a service request and/or to act as a receiver for Hotline originated calls and/or calls from designated parties on a screening list, Hotline service shall allow normal analog and digital (ISDN and non-ISDN) users to place calls by either going off-hook or call setup request without providing, in the call setup request, the called party information required by the network to route the call. Instead, the information for the destination call party setup is stored in the network by prior subscription. The service shall also allow terminating restrictions to be provided to ensure that certain voice and/or circuit mode data Hotline subscribers only receive calls from other specified users. The Hotline service shall be provided on a subscription basis to specific users and may be withdrawn for administrative reasons or at the request of the subscriber.

The Hotline subscriber with the originating Hotline option shall invoke the service by sending a normal call setup request to the network but without destination information. The network shall use the subscribed information (Precedence level with voice and/or circuit mode data) to process the call and establish it according to the normal network procedures. The network shall also indicate and retain that the call is a Hotline originated call with the subscribed precedence and voice and/or circuit mode data.

At the called user with a Terminating Restriction option, the restriction portion of the service shall be invoked whenever a terminating call is received by the network of the called user.

If the called user is subscribed to the Terminating Restriction by list option only, the network searches the screening list for the calling user's number. If the calling user's number is provided and found on the screening list, the network shall complete the call. If the calling user's number is not provided or if the provided number is not found on the screening list, the network shall block the call, provide the appropriate intercept treatment, and log the attempt.

2.12.1 Protected Hotline Calling

[Required: MFS, EOS, SMEO] In addition to the protection provided by the use of the route code, the user may receive Hotline calls only from a specified list of parties and may originate calls to a specified destination only, called the Designated Called Party (DCP).

2.12.2 Pair Protected Hotline Calling

[Required: MFS, EOS, SMEO] In addition to the protection provided by the use of the route code, each of the two designated users can only call each other and no third party can call either.

2.12.3 Unprotected Hotline Receiving

[Required: MFS, EOS, SMEO] The user may originate calls to a specified destination only (i.e., the DCP) but may receive calls from any party including the DCP.

2.12.4 Protected Hotline Receiving

[Required: MFS, EOS, SMEO] In addition to the protection provided by the use of the route code, the user may receive calls only from a list of parties but may originate calls to any party.

2.12.5 User Interoperability

[Required: MFS, EOS, SMEO] ISDN Hotline shall be interoperable with analog, digital, and other BRI lines using the DSN Worldwide Dialing and Numbering Plan (WWDNP) "route code" identifier of "*5" for voice and "*6" for circuit mode data calls.(* The user does not dial these route codes.) The switch shall automatically dial hotline calls when an off-hook condition occurs and out pulse the appropriate route digit (i.e. 5 or 6). Refer to table 4-8.

2.13 thru 2.13.5 deleted.

SECTION 3 – Multi-Level Precedence and Preemption (MLPP)

3.0 Introduction

This section covers the MLPP requirements for DSN switching systems. It discusses precedence levels, cause values, preemption in the network, interface requirements for MLPP with ISDN, and MLPP interactions with other features and services. No feature or function specifically identified in this GSCR or in the referenced standards shall prevent the completion or connection of a PRIORITY or higher precedence call in accordance with this section.

3.1 Multi-Level Precedence and Preemption (MLPP) Overview

3.1.1 Description

[Required: TS, EOS, MFS, SMEO, PBX1] The MLPP service applies to the MLPP service domain only. Connections and resources that belong to a call from an MLPP subscriber shall be marked with a precedence level and domain identifier (Refer to sections 3.7 & 3.9) and shall only be preempted by calls of higher precedence from MLPP users in the same MLPP service domain. The maximum precedence level of a subscriber is set at the subscription time by the DSN network administrator based on the subscriber's validated need. The subscriber may select a precedence level up to and including the maximum authorized precedence level on a per call basis.

Precedence provides preferred handling of MLPP service requests. It involves assigning and validating priority levels to calls and prioritized treatment of MLPP service requests.

Precedence calls (PRIORITY and above) that are not responded to by the called party (e.g., call unanswered) shall be diverted in accordance with section 3.3. If precedence call waiting has been invoked, these calls shall be handled in accordance with section 3.8.1. Unanswered calls placed at a ROUTINE precedence level shall continue to ring.

Preemption may take one of two forms. First, the called party may be busy with a lower precedence call which must be preempted in favor of completing the higher precedence call from the calling party. Second, the network resources may be busy with calls some of which are of lower precedence than the call requested by the calling party. One or more of these lower precedence calls shall be preempted to complete the higher precedence call. There are four characteristics of preemption:

a. Any party whose connection was terminated (whether that resource is reused or not) shall receive a distinctive preemption notification (see Section 5, Paragraph 5.5, Table 5-5);

b. Any called party of an active call that is being preempted by a higher precedence call shall be required to acknowledge the preemption by going on-hook, before being connected to the new calling party;

c. When there are no idle resources, preemption of the lowest of these lower level precedence resources shall occur;

d. A call can be preempted any time after the precedence level of the call has been established and before call clearing has begun.

3.1.2 Precedence Levels

[Required: TS, EOS, MFS, SMEO, PBX1] The switch shall provide five precedence levels. The precedence levels listed from lowest to highest are: ROUTINE, PRIORITY, IMMEDIATE, FLASH, and FLASH OVERRIDE.

3.1.3 Announcements

[Required: TS, EOS, SMEO, MFS, PBX1] Precedence Access Limitation Announcement (PALA) is conditional for all switches and Attendant Queue Announcement (ATQA) is required for MFS and EOS. With the exception of PALA and ATQA, the announcements in Table 3-1 are required for all DSN Switches and all announcements that are associated with specific Network Management Trunk Group and/or Code control implemented. Each message shall contain a location identification number to be provided by the Government. The switching system shall be identified by "Switch Name and Location". Announcements shall be capable of being recorded and changed by maintenance and operations personnel without the use of vendor proprietary passwords or proprietary equipment and software.

Table 3-1. Announcements

Announcement Condition	Announcement
An equal or higher precedence call is in progress	Blocked Precedence Announcement (BPA). "(Switch name and Location). Equal or higher precedence calls have prevented completion of you call. Please hang up and try again. This is a recording. (Switch name and Location)."
Unauthorized Precedence level is attempted	Unauthorized Precedence Level Announcement (UPA). "(Switch name and Location). The precedence used is not authorized for your line. Please use an authorized precedence or ask your attendant for assistance. This is a recording. (Switch name and Location)."
No such service or Vacant Code	Vacant Code Announcement (VCA). "Switch name and Location. Your call cannot be completed as dialed. Please consult your directory and call again or ask your operator for assistance. This is a recording. (Switch name and Location)."
Operating or equipment problems encountered.	Isolated Code Announcement (ICA). "(Switch name and Location). A service disruption has prevented the completion of your call. Please wait 30 minutes and try again. In case of emergency call your operator. This is a recording. (Switch name and Location)."
Precedence Access Threshold limitation	Precedence Access Limitation Announcement (PALA). "(Switch name and Location). Precedence access limitation has prevented the completion of your call. Please hang up and try again. This is a recording. (Switch name and Location)."
Busy station not equipped for preemption	Busy Not Equipped Announcement (BNEA). "(Switch name and Location). The number you have dialed is busy and not equipped for call waiting or preemption. Please hang up and try again. This is a recording. (Switch name and Location)."
Attendant Queue Announcement (ATQA)	"This is the <site name> [multifunction, end office] switch. All attendants are busy now. Please remain on the line until an attendant becomes available or try your call later. This is a recording. <site name> [multifunction, end office] switch."

3.1.4 Invocation and Operation.

[Required: TS, EOS, MFS, SMEO, PBX1] The precedence level of a call is selected by the subscriber on a per call basis. The subscriber may select any precedence level up to and including his maximum authorized precedence level. The network at the subscriber's originating interface ensures that the selected precedence level does not exceed the maximum level assigned to that number. Once set for a call, this precedence level cannot be changed nor shall a connection between two DSN subscribers have different precedence levels.

A call will automatically default to ROUTINE unless a higher precedence is dialed. The DSN worldwide numbering and dialing plan is specified in Section 4, Paragraphs 4.5.1, 4.5.3, and 45.4.

During a call setup, if there is a shortage of network resources, then the switch shall determine if resources are held by calls of lower precedence. The switch can then release the lowest of these lower precedence call(s) and seize the resources required to set up the higher precedence call. These resources include interoffice circuits, intraoffice circuits, lines, conference bridges, and circuit switched data circuits.

The preemption operation depends on whether the switch needs to preempt a common network facility, such as an interswitch trunk that is currently being used by a different subscriber than the intended called subscriber or whether it needs to preempt a channel on the user access of the called subscriber.

If a called user access line is to be preempted, both the called party and its connected-to-parties shall be, at a minimum, audibly notified of the preemption using the preemption tone in Section 5, Table 5-5, and the existing MLPP call shall be immediately cleared. The called party must acknowledge the preemption by going on-hook or pressing a feature button, before the higher precedence call is completed. The called party is then offered the new MLPP call.

After attempting a precedence call, the calling party shall receive an audible ringback precedence call tone when the call is successfully offered to the called party as a precedence call. These alerting tones are provided in Section 5, Table 5-5.

The calling party shall receive a blocked precedence announcement (BPA), as shown in Table 3-1, for the following reasons:

a. equal or higher precedence calls have prevented completion;

b. there are no idle network resources to make a connection to the dialed number and the called subscriber belongs to a network that does not support preemption.

The calling party shall receive an unauthorized precedence announcement (UPA), as shown in Table 3-1, if the requested precedence level is not subscribed to.

The calling party shall receive a busy not equipped announcement (BNEA), as shown in Table 3-1, if the called party is assigned as non-preemptable.

Precedence calls (PRIORITY and above) that are not responded to by the called party (e.g., call unanswered) shall be diverted in accordance with section 3.3. If precedence call waiting has been

invoked, these calls shall be handled in accordance with section 3.8.1. Unanswered calls placed at a ROUTINE precedence level shall continue to ring.

3.2 Preemption in the Network

[Required: TS, EOS, SMEO, MFS, PBX1] The following treatment at the called party's interface for precedence calls applies to both analog and digital (ISDN and non-ISDN) terminating lines.

3.2.1 Network Facilities Active With Lower Precedence Calls

[Required: TS, EOS, SMEO, MFS, PBX1] For Priority calls and above, during call setup, if there is a shortage of a network resource, then the network shall determine if resources are held by calls of lower precedence. The network shall release the lowest of these lower precedence call(s) and seize the necessary resources that are required to setup the higher precedence call. These resources include interoffice circuits, channels, conference bridges, and circuit-switched data circuits.

When a common network facility is preempted, all existing parties shall receive a preemption tone (see Section 5, Table 5-5) and the existing connection is disconnected. The new higher precedence call is then setup using the preempted facility.

3.2.1.1 CANCEL to (CANT) / CANCEL from (CANF)

[Required: TS, EOS, MFS - Conditional: SMEO] Requirements for this feature shall be in accordance with Telcordia Technologies GR-477-CORE, ***Network** Traffic **Management,*** Issue 4, Feb. 2000, Section 6.

In addition, FLASH and FLASH OVERRIDE calls shall be exempted from these controls. The application of any trunk group (TG) control shall not prevent precedence calls from performing a preemptive search on all of the TG's that were previously friendly searched.

3.2.2 Network Facilities Active With Equal or Higher Precedence Call

[Required: TS, EOS, SMEO, MFS, PBX1] If all network facilities required to complete a precedence call are busy with equal or higher precedence calls, the calling user shall be sent the blocked precedence announcement. (see Table 3-1)

3.2.3 MLPP Trunk Selection (Hunting).

[Required: TS, EOS, SMEO, MFS] DSN route selections shall be based on precedence level and calling area classmarks for both voice-grade and data-grade trunk groups. The DSN hunting sequence shall be capable of being varied depending on the route. Hunt sequences shall be capable of scanning data-grade trunk groups for voice-grade calls. The hunting sequence shall be capable

of searching all trunks. The hunting sequence shall first examine the route digit so that, for data calls only, data-grade trunks shall be searched. For voice-grade calls, all trunks shall be searched.

3.2.3.1 Hunt Sequence for Trunks

[Required: TS, EOS, SMEO, MFS] The switches shall route DSN calls to trunks that have classmarks to indicate the precedence level and calling area (PL/CA). Calls shall not be originated over trunks that are classmarked at a PL/CA authorization lower than that used to register the call.

3.2.3.1.1 ROUTINE Calls

[Required: TS, EOS, SMEO, MFS] For ROUTINE calls, the switch shall employ an idle search on all programmed routes to the call destination. Failing to find an idle trunk, the switch shall provide a trunk busy tone to the caller.

3.2.3.1.2 Precedence Calls Above ROUTINE

[Required: TS, EOS, SMEO, MFS] The switch shall provide for two methods of trunk route selection for precedence calls above ROUTINE. Either method can be assigned to a destination route based on the DSN KXX and/or KXX code of the call. In each method, trunks shall be individually tested for idle or busy conditions. If preemption is required, only a call of the lowest level of precedence, lower than the dialed precedence, shall be preempted.

3.2.3.1.2.1 Method 1

[Required: TS, EOS, SMEO, MFS] In method 1, as shown in Figure 3-1A, the switch shall first perform an idle search on the direct route and all alternative routes. Failing to find an idle trunk, the switch shall enter the preemptive search. In the preemptive search, the switch shall again search for an idle trunk in the direct route, and if so, shall select any idle trunk found. If no idle trunk exists in the direct route, the switch shall preempt the call of the lowest precedence in the direct route, provided the precedence of the call selected for preemption is lower than the precedence of the call being processed. Failing to complete the call on the direct route, the switch shall advance the preemptive search to the next alternate route, and repeat the preemptive search process described above. This process will continue through all possible alternate routes. When the switch is unable to preempt, it shall route the caller to the Blocked Precedence Announcement (BPA).

3.2.3.1.2.2 Method 2

[Required: TS, MFS - Conditional: EOS, SMEO] In method 2, as shown in Figure 3-1B, the switch shall directly enter a friendly then a preemptive search of the direct route before searching the next alternate route choice. In the preemptive search, the switch shall search for an idle trunk in the direct route, and if so, shall select any idle trunk found. If no idle trunk exists in the direct route, the switch shall preempt the call of the lowest precedence in the direct route, provided the precedence of the call selected for preemption is lower than the precedence of the call being processed. Failing to complete the call on the direct route, the switch shall advance the preemptive search to the next alternate route, and repeat the preemptive search process described above. This

process will continue through all possible alternate routes. When the switch is unable to preempt, it shall route the caller to the Blocked Precedence Announcement (BPA).

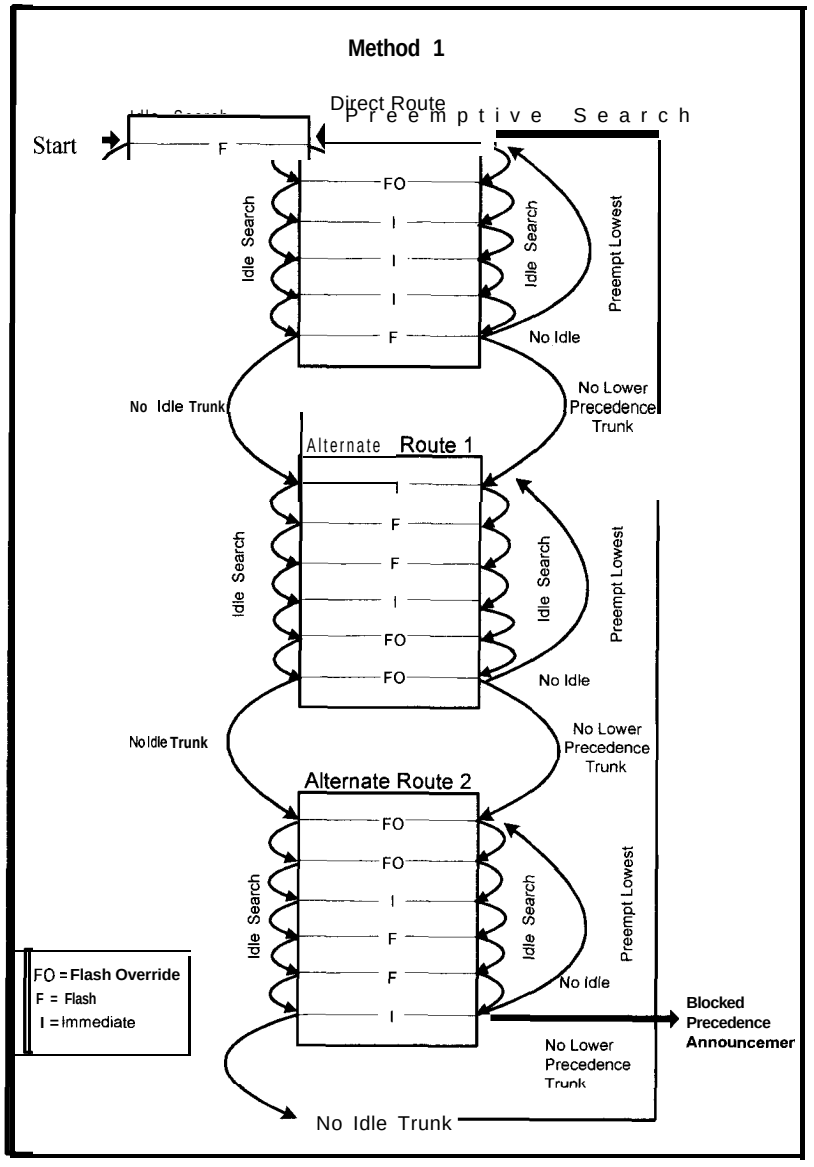

Figure 3-1A. Example Hunt Sequence for Method 1

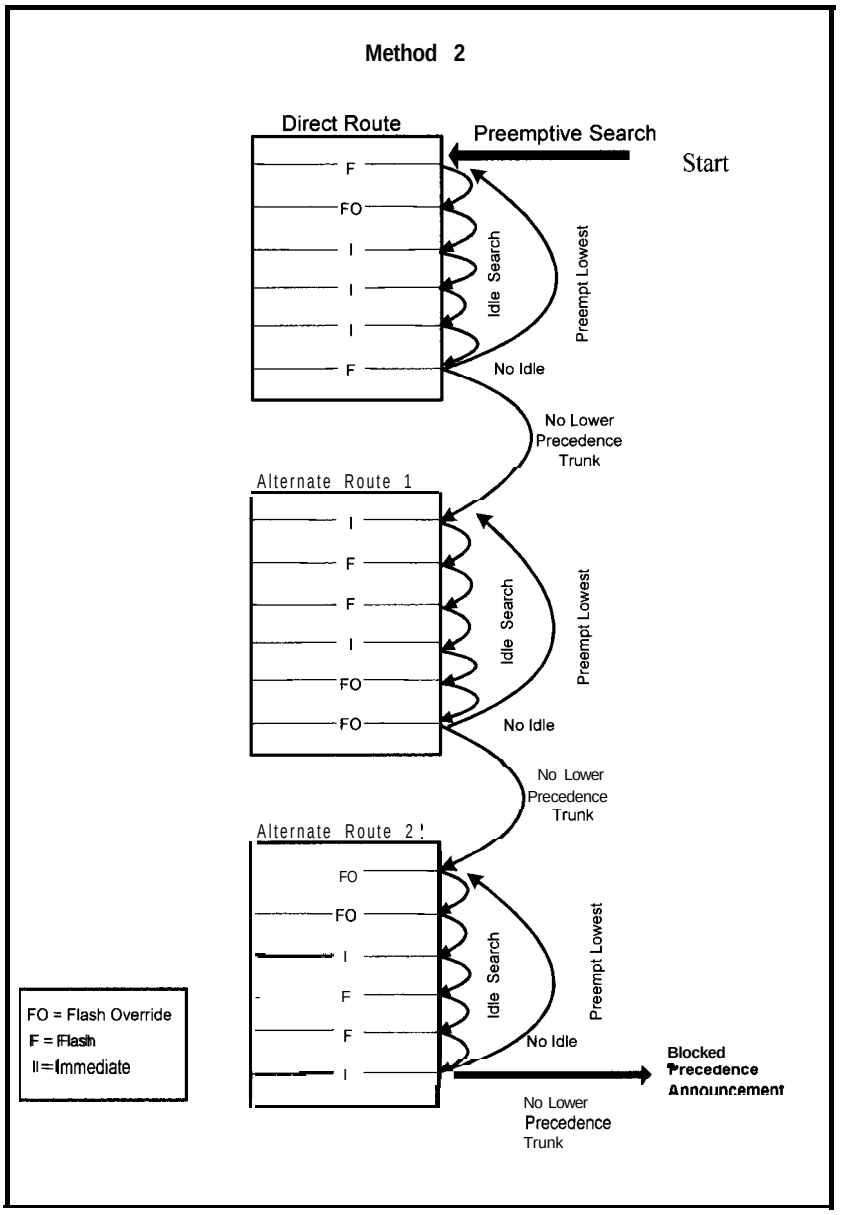

Figure 3-1B. Example Hunt Sequence for Method 2

3.2.4 MLPP Interworking with Other Networks

3.2.4.1 Calls From non-MLPP Networks

[Required: TS, EOS, SMEO, MFS] Calls from non-MLPP networks that enter the DSN shall be assigned the lowest precedence level and the DSN MLPP service domain identification at the network boundary and may be preempted within the DSN.

3.2.4.2 Precedence Calls to Non-MLPP Networks

[Required: TS, EOS, SMEO, MFS] When a precedence call leaves the DSN and enters a network that does not support the MLPP service, the call is treated as an non-MLPP call and does not cause preemption. A network that does not support the MLPP service is required, if technically possible within the existing system, to convey the parameters of the MLPP service (e.g., precedence level, domain, etc.) intact. In this case, the network shall pass them on with no action taken. In other words, the network shall not act on these parameters and pass them on transparently.

3.3 Precedence Call Diversion

[Required: MFS, EOS SMEO, PBX1] The switch shall provide a global default diversion of all unanswered calls above routine to a designated Directory Number (DN) (e.g. Attendant Console), after a specified period of time, selectable 15-45 seconds and before the Voice Mail and ACD system diversion. Calls above "ROUTINE" precedence destined to directory numbers that are configured with voice mail or ACD systems shall only divert as specified above. "ROUTINE" precedence calls destined to directory numbers that are configured with voice mail or ACD systems are allowed and shall be configurable to divert after the global default diversion timer interval.

Precedence calls above ROUTINE shall not be forwarded to Voice Mail.

Incoming DSN precedence calls to the attendant's listed directory number and incoming calls diverted to an attendant shall signal the attendant by a distinctive visual signal indicating the precedence level and shall be placed in queue. Call distribution shall be accomplished to reduce excessive waiting times. Each attendant position shall operate from common queue(s). Incoming calls shall be queued for attendant service by precedence and time of arrival. The highest precedence with the longest holding time call shall be answered first. A recorded message of explanation (Attendant Queue Announcement) shall be automatically applied to the waiting calls. (Refer to table 3-l)

3.4 Preempt Signaling

3.4.1 Channel Associated Signaling (CAS)

[Required: TS, EOS, SMEO, MFS - Conditional: PBX1] Preemption on Channel Associated Signaling (CAS) trunks is accomplished at a DSN switch by sending a measured supervisory signal toward both the calling and called user lines of an established or ringing call connection. The supervisory signal is recognized at each DSN switch, causing disconnect of any intermediate trunk circuits. Following intermediate circuit release, preempt warning tone of 440 + 620 Hz is applied to each end-user line or PBX access line circuit. The preempt warning tone is introduced by the terminating DSN switch at a composite level of -16 dBm, measured at the zero Transmission Level Point (TLP). The preempt warning tone is maintained until a disconnect signal is returned to the switch. The trunk and/or line which was selected for preemption for reuse is now reused to serve the waiting precedence call. Four preemption signals exist, depending upon the circuit condition and intended disposition and are illustrated in Figure 3-2 and described in Table 3-2. Preemption for reuse can only be exercised on classmarked trunks or access lines in a preemptable group. Preemption not for reuse may occur on any classmarked trunk or access line when another link in the established connection is preempted for reuse. DSN switches shall apply preempt warning tone to Dial Pulse and Dual Tone Multi-Frequency access lines amd access trunks that do not use "Wink Start" signaling for supervision. Trunks that use Wink Start supervision must conform to the preempt signals as shown in Figure 3-2. Access lines and trunks using common channel supervision (i.e. D channel signaling) shall apply the preempt warning tone to the user that is preempted. Switches that support MF (R1) signaling shall be capable of interpreting and responding to the four preempt signals as shown in Figure 3-2.

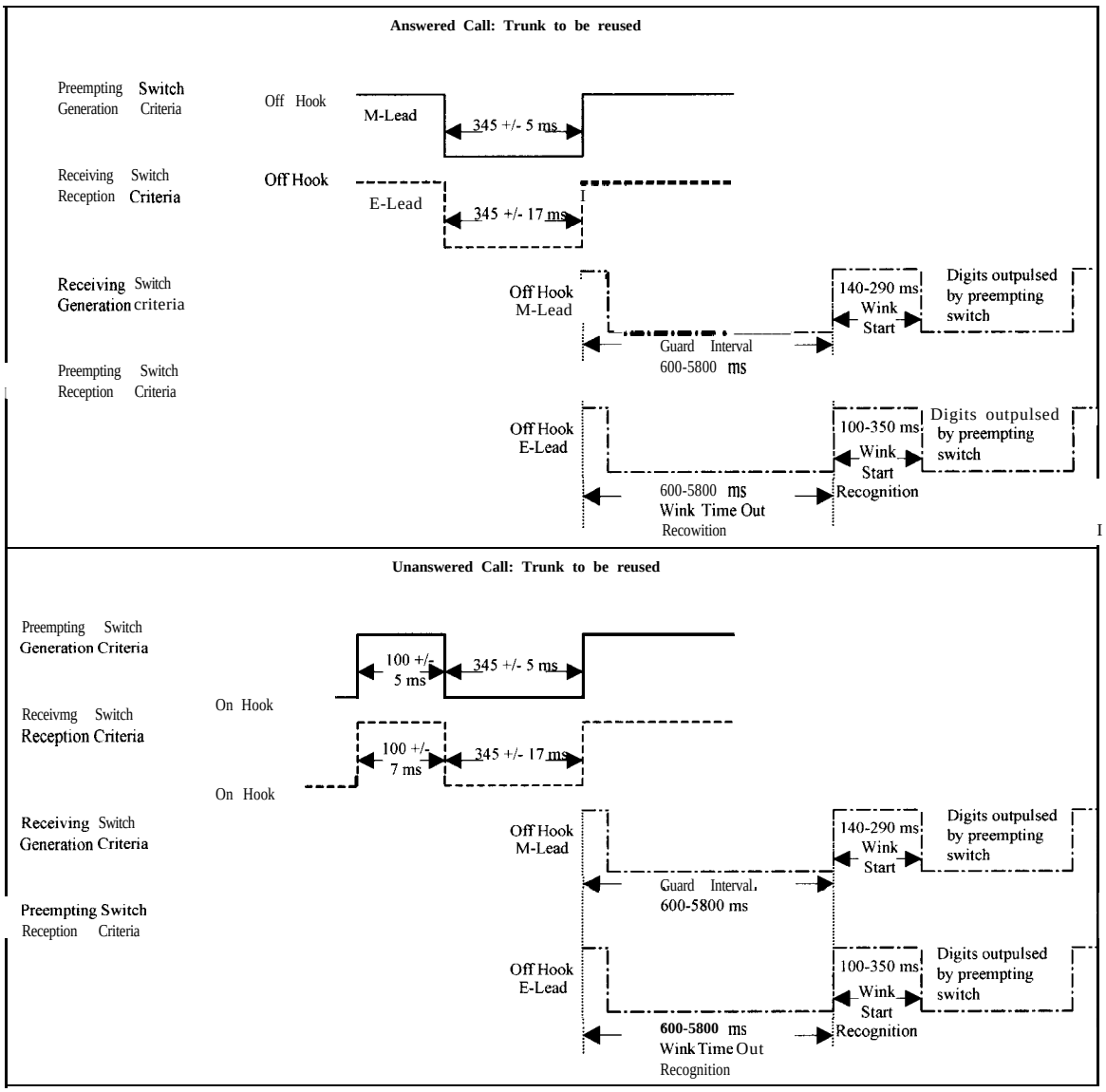

Figure 3-2. DSN Preempt Signals

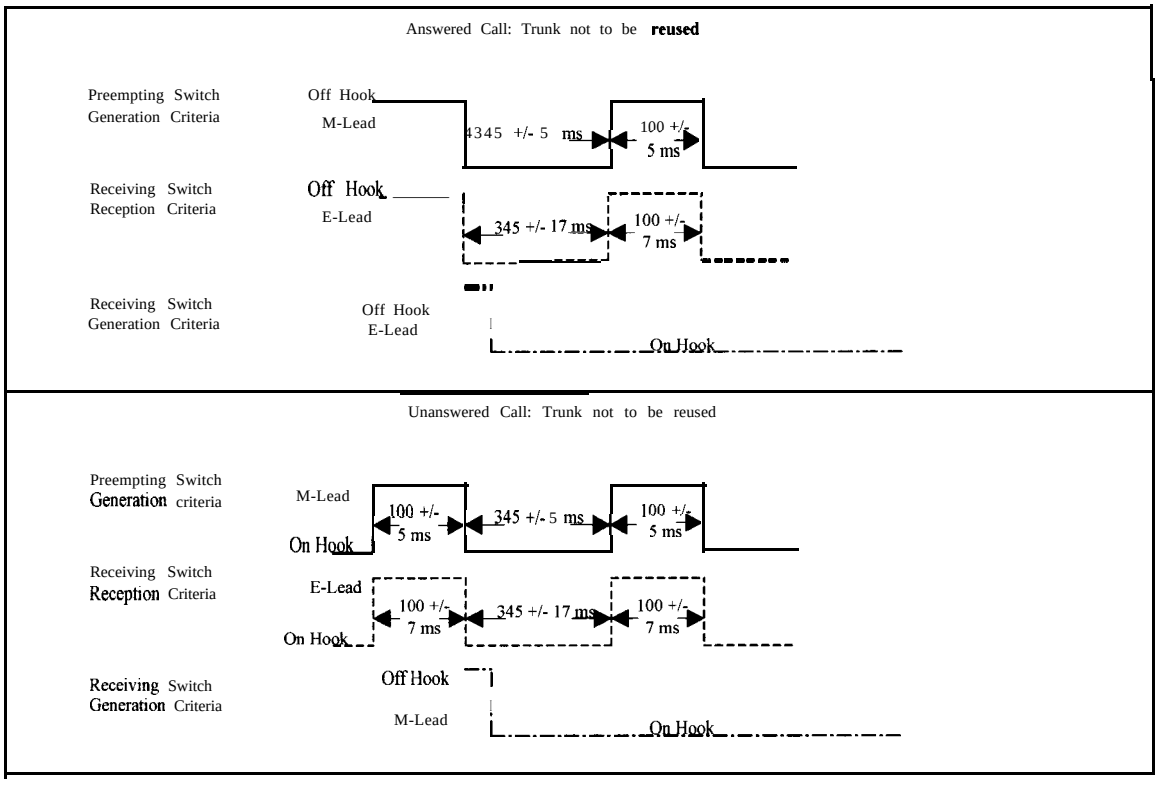

Figure 3-2. DSN Preempt Signals (continued)

Table 3-2. Multi-Level Precedence and Preemption Signaling Sequences

Preemption Type	Expected Signaling Sequences
Answered Call, Circuit to be Reused	The preempting switch shall signal the preempted trunk to be reused with: A 340- to 350-millisecond on-hook pulse AND Followed by a normal off-hook seizure to complete the call for the preempting user.
Unanswered Call, Circuit to be Reused	The preempting switch shall: Release the terminating trunk toward the unanswered user, AND Return an off-hook of 100 ± 5 milliseconds toward the originating trunk, AND Followed by an on-hook of 340 to 350 milliseconds AND Followed by normal off-hook seizure signal to complete the call for the preempting user.
Answered Call, Circuit Not to be Reused	The preempting switch shall signal the preempted trunk not to be reused with: A 340- to 350-millisecond on-hook pulse AND Followed by an off-hook "pedestal" of 100 ± 5 milliseconds, AND Followed by on-hook supervision.
Unanswered Call, Circuit Not to be Reused	The preempting switch shall: Return an off-hook of 100 ± 5 milliseconds toward the originating trunk, AND Followed by an on-hook of 340 to 350 milliseconds AND Followed by an off-hook of 100 ± 5 milliseconds, AND Followed by on-hook supervision

3.4.2 Primary Rate Interface (PRI)

[Required: TS, EOS, SMEO, MFS, PBX1] Requirements for MLPP PRI signaling shall be in accordance with ANSI Standards T1.619-1992, T1-619a-1994 and section 2.3.4.

3.4.3 Common Channel Signaling Number 7 (CCS7)

[Required: TS, EOS, MFS - Conditional: SMEO] Requirements for MLPP CCS7 signaling shall be in accordance with ANSI Standards T1.619-1992 and Tl-6 19a- 1994.

3.5 Analog Line MLPP

3.5.1 Busy At The Called Partv's Interface

[Required: EOS, SMEO, MFS, PBX1] The following busy line treatment at the called party's interface for precedence calls applies to analog terminating lines. The line treatments apply to inter-switch calls or calls between stations on the same switch.

3.5.1.1 Line Active With A Lower Precedence Call

[Required: EOS, SMEO, MFS, PBX1] Precedence calls arriving at a busy station that is classmarked as premptable shall preempt the active lower precedence call. The active busy station shall receive continuous preemption tone until an on-hook signal is received and the other party shall receive preemption tone for a minimum of 3 seconds. (see section 5, table 5-5) After going on-hook, the station to which the precedence call is directed shall be provided precedence ringing (see section 5, table 5-4). The station shall be connected to the preempting call after going off-hook.

If Call Waiting is invoked on the terminating line, it shall be ignored and the existing lower precedence call shall be preempted. (Refer to paragraph 3.8.1.3)

3.5.1.2 Line Active With An Equal or Higher Precedence Call Above Routine

[Required: EOS, SMEO, MFS, PBX1] Precedence calls arriving at a station that is busy with an equal or higher precedence call shall be routed to a Blocked Precedence Announcement (BPA) (Table 3-l). If the called station has activated call forwarding, the switch shall attempt to complete the call to the forward destination

3.6 ISDN MLPP Basic Rate Interface (BRI)

[Required: EOS, SMEO, MFS - Conditional: PBX1, PBX2]

3.6.1 General Description

The ISDN MLPP BRI interface allows the simultaneous transmission of voice, circuit-switched data, and packet data over a single customer line connecting CPE and a digital switch. Specifically, the basic access allows the provision of two 64-kbps B channels, which may be used to carry voice, circuit-switched data, or packet data, and a 16-kbps D channel, which can carry signaling and packet information.

Requirements for this feature shall be in accordance with ANSI Standard ANSI T1.619-1992, ANSI T1.619a-1994 and section 2.3.3.

3.6.2 Single B-Channel, Single Appearance, Single Directory Number (DN)

Required: EOS, SMEO, MFS - Conditional: PBX1, PBX2] The following busy line treatment at the called party's interface for precedence calls applies to digital (ISDN and non-ISDN) terminating lines. The line treatments also apply to inter-switch calls and calls between stations on the same switch.

3.6.2.1 Line Active With A Lower Precedence Call

[Required: EOS, SMEO, MFS - Conditional: PBX1, PBX2] Precedence calls arriving at a busy station that is classmarked as preemptable shall preempt the active lower precedence call. The active busy station shall receive continuous preemption tone until an on-hook signal is received and the other party shall receive preemption tone for a minimum of 3 seconds. (see section 5, table 5-5) After going on-hook, the station to which the precedence call is directed shall be provided precedence ringing (see section 5, table 5-4). The station shall be connected to the preempting call after going off-hook.

If Call Waiting is invoked on the terminating line, it shall be ignored and the existing lower precedence call shall be preempted. (Refer to Paragraph 3.8.1.3)

3.6.2.2 Line Active With An Equal or Higher Precedence Call

[Required: EOS, SMEO, MFS - Conditional: PBX1, PBX2] Precedence calls arriving at a station that is busy with an equal or higher precedence call shall be routed to a Blocked Precedence Announcement (BPA) (Table 3-l). If the called station has activated call forwarding, the call shall be forwarded to the new number at the same precedence level.

3.6.3 Single B-Channel, Multiple Appearances, Single Directory Number (DN)

[Required: - EOS, SMEO, MFS - Conditional: PBX1, PBX2] This section describes the requirements for processing precedence calls over a single B-Channel ISDN interface with a station set that has multiple appearances and one directory number.

Incoming precedence calls to a multiple appearance ISDN station set shall provide a precedence ringing tone on the next available button as well as a visual display of the precedence level on the station set. The called party shall then have the option of either placing the current call on hold and picking up the incoming precedence call or ignoring the call.

This process of placing a call on hold and answering a precedence call shall remain the same until the BRI is saturated (i.e. all call appearances are in use). When an incoming precedence call is made to a saturated BRI, the lowest precedence call (including those on hold) shall be preempted.

If a held call has the lowest precedence, the switch shall send a preemption tone to the held caller. The switch also sends a preemption tone to the corresponding appearance on the station set of the destination DN that has placed the call on hold. After a preset time the call is cleared and the

switch sends a precedence ring to the corresponding appearance on the station set of the destination DN. The DN user then hears the precedence ringing, indicating that the call on hold has been dropped. The DN user also sees the precedence level of this new call on the station set display. The DN user shall have the option of answering the call, letting it forward to an alternate party, and/or letting it divert to an attendant.

If the active call has the lowest precedence, the switch shall send a preemption tone to active call and the destination DN. When the destination DN goes on-hook, a precedence ring is received indicating the incoming precedence call.

In both cases, the other held calls are not preempted and may by retrieved at any time.

3.6.4 Two (2) B-Channels, Multiple Appearances, Single Directory Number (DN)

[Required: - EOS, SMEO, MFS - Conditional: PBX1, PBX2] The requirements for processing precedence calls over a two (2) B-Channel ISDN interface with a station set that has multiple appearances and one directory number shall be identical to that in section 3.6.3 (precedence calls over a single B-Channel ISDN interface with a station set that has multiple appearances and one directory number).

This interface is also limited by the number of possible appearances on the ISDN station set.

3.6.5 Two B-Channels, 2 Directory Numbers (DN)

[Required: - EOS, SMEO, MFS - Conditional: PBX1, PBX2] This section describes the requirements for processing precedence calls over a two B-Channel ISDN interface with two directory numbers.

This configuration offers a wide range of options. In this configuration, the BRI may be configured as follows:

- two voice channels or
- two data channels or
- one voice and one data channel

In the voice channel configuration, each voice channel shall function identical to a Single B-Channel, single Directory Number BRI.

If the ISDN call appearance is set up as data-mode only (1 or 2 B-Channels equipped for data), preemption by incoming voice calls shall not be permitted. Any incoming voice calls shall receive the appropriate treatment.

If one BRI is designated for voice traffic and the other for data traffic both of the above comments apply, respectively.

3.7 ISDN MLPP Primary Rate Interface (PRI)

[Required: TS, EOS, SMEO, MFS, PBX1] Requirements for ISDN MLPP PRI shall be in accordance with ANSI Standards T 1.6 19- 1992 and T l-6 19a- 1994.

[Conditional: TS, EOS, SMEO, MFS, PBX1] Requirements for ETSI ISDN MLPP PRI shall be in accordance with ITU-T Standards Q.955.3 -1993.

3.7.1 Definitions

a. **MLPP Service Domain:** An MLPP service domain consists of a set of MLPP subscribers (MLPP users) and the network and access resources that are in use by that set of MLPP subscribers at any given time. Connections and resources that are in use by MLPP subscribers may only be preempted by higher precedence calls from MLPP subscribers within the same domain. The service domain consist of a three octet field ranging from 00 00 00 to FF FF FF in hexadecimal. The DSN service domain is zero (0).

b. **Network:** In this standard, "network" refers to all telecommunications equipment that has any part in processing a call or a supplementary service for the user referred to. It may include local exchanges, transit exchanges, and NT2s but does not include the ISDN terminal and is not limited to the "public" network or any other particular set of equipment.

c. MLPP Call: An MLPP call is a call that has a precedence level established and is ether being setup or is setup. In Digital Subscriber Signaling System number 1 (DSS1 : ISDN 4.93 1 signaling), an MLPP call is a call from an MLPP subscriber for which a setup has been sent but no DISCONNECT has been sent or received.

d. **Preemptable Circuit:** A Preemptable circuit is a circuit that is active with or reserved for an MLPP call: (a) within the same domain as the preempting call and (b) with a lower precedence than the preempting call. A busy or reserved circuit for which a precedence level has not been specified is not a preemptable circuit.

e. Preemption initiating exchange: A preemption initiating exchange is the exchange that is congested (i.e. no idle circuits) and has received a preempting call setup.

3.7.2 Precedence Level Information Elements

[Required: TS, EOS, SMEO, MFS, PBX1] The MLPP ISDN PRI SETUP Message shall contain the Precedence Level Information Element in Codeset 5 as shown in Table 3-3 below.

Table 3-3. Precedence Level Information Element (Codeset 5)

Bit:	87654	3	2	1		
Octet 1	Precedence Level Information 0 1 0 0 0 0 0 1 Element Identifier					
2	Length of Precedence Level Contents					
3	1 Ext	Coding Standard	Spare	Precedence Level		
4	0/1 Ext	Spare	Change Value	Spare	LFB Indication	
5	1st Network Identity Digit		2nd Network Identity Digit			
6	3rd Network Identity Digit		4th Network Identity Digit			
7	Most Significant Bit (DSN MLPP Service Domain 1 st Octet)					
8	DSN MLPP Service Domain (2nd Octet)					
9	Least Significant Bit (DSN MLPP Service Domain 3rd Octet)					

Octet 3:

Bit 8 Set to 1 as an extension bit

Bits: 7-6 (Coding standard)

0 0 CCITT standardized coding

10 National Standard*

*The coding standard for DSN shall be assigned as "National"

Bit 5 (Spare)

Bits 4 3 2 1 (Precedence level)

0 0 0 0 (FLASH OVERRIDE-highest)

0 0 0 1 (FLASH)

0 0 1 0 (IMMEDIATE)

0 0 1 1 (PRIORITY)

0 1 0 0 (ROUTINE-lowest)

0 1 0 1

to (Spare)

1 1 1 1

Octet 4:

Bit 8	Set to O/l as an extension bit
Bits 7-6-5	(Spare)
Bit 4	(Change value)
0	Precedence level coding privilege may be changed at network boundaries
1	Precedence level coding privilege may not be changed at network boundaries
Bit 3	(Spare)
Bits 2-l	(Look forward busy indication)
00	LFB allowed
01	LFB not allowed
10	Path reserved
11	Spare

Octets 5-6 (Network Identity, NI). Each digit is coded in a binary decimal representation from 0 to 9. The first NI digit is coded 0. The Telephony Country Code (TCC) follows in the second to the fourth NI digits (the most significant TCC digit is in the second NI digit). If the TCC is one or two digits long, the excess digits(s) is inserted with the code for RPOA or network identification, if necessary. If octet 6 is not required, it is coded all zeros.

Octets 7-9 (DSN MLPP Service Domain). A code expression in pure binary the number allocated to an DSN MLPP Service Domain to uniquely identify a customer domain across multiple ISDN networks. Bit 8 of octet 7 is the most significant bit and bit 1 of octet 9 is the least significant bit.

3.7.3 Disconnect Message Information Cause Values

[Required: TS, EOS, SMEO, MFS, PBX1] The MLPP ISDN PRI Q.93 1 DISCONNECT message shall contain the following CAUSE values shown in table 3-4 as defined in the ANSI Standards T1.619-1992 and T1-619a-1994.

Table 3-4. Disconnect Message Cause Value

Disconnect Message Cause Value	Description
8	Answered or Unanswered Call; Circuit is not to be Reused
9	Answered or Unanswered Call; Circuit is to be Reused

46	Unavailable Resources; Precedence Call is Blocked with Equal or Higher Precedence Calls

3.7.4 Signal Information Element

[Required: TS, EOS, SMEO, MFS, PBX1] For providing tones and announcements, the Signal IE, as described in 4.5.24 of **ANSI** T1.607, shall be used with the following two US national codepoints for signal values as shown in table 3-5.

Table 3-5. US National Codepoints for Signal Values

Signal Value	Explanation	North American Practice
9	Preemption tone is on	Precise tone is a continuous 440 Hz tone added to a 620 Hz tone
-	Precedence call alerting ring back tone on	Ring back tone (audible ringing tone) is a 440 Hz tone added to a 480 Hz tone repeated in a 1.64 s on, 0.36 s off pattern
66		Precedence call alerting 1.64 s on, 0.36 s off
Note – No signal value is assigned to "precedence call alerting ring back tone on" since the tone is always applied by the destination exchange. This ring back tone is as indicated in the table.		

Signal value (Octet 3)

Bits 8 7 6 5 4 3 2 1

0 0 0 0 1 0 0 1 (9) Preemption tone

0 1 0 0 0 0 1 0 (66) Alerting on-pattern 2

(Special/priority alerting)

3.7.5 ANSI T1.619a Setup Message Called Party Number Format

[Required: TS, MFS, EOS, SMEO, PBX1] The ANSI T1 . 619a ISDN Setup Message called party number format shall be as shown in table 3-6.

Table 3-6. ANSI T1.619a ISDN Setup Message Called Party Number Format

Access Digit	Precedence Digit	Route Control Digit	Area Code	Switch Code	Line Number
(N) 1	(P) 1	[Y]	(KXX)	KXX	x x x x

Legend:

N is any digit from 2-9

P is any digit O-4

X is any digit O-9

K is any digit 2-8

Y is any digit O-3

Notes:

1. The Access and Precedence digits may only be present on Customer Premise Equipment interfaces that do not support ANSI T1.619a interfaces (e.g. Integrated Access, and Video Teleconferencing Devices). The switching system shall process the precedence level of the call based on the precedence digit outpulsed in the Called Party Information Element in Lieu of the Precedence Information Element in Codeset 5.

2. Digits shown in brackets [ ] are only required for TS and MFS switches and are not present on all calls.

3. Digits shown in parenthesis ( ) are not present on all calls.

3.7.6 ANSI T1.619a and non-ANSI T1.619a Interaction

[Required: TS, EOS, SMEO, MFS, PBX1]

a. Trunk-to-trunk tandem calls. The switch shall have the capability to assign a default DSN MLPP service domain to an ANSI T1.619a trunk (i.e. ISDN PRI, SS7) that tandems from a non-ANSI T1.619a trunk (i.e. T1/E1 CAS, Analog E&M, ISDN PRI, SS7). The default DSN MLPP domain shall be assigned by the switch via the administration terminal, and shall be a range from 00 00 00 to FF FF FF in hexadecimal.

b. Trunk-to-line calls. The switch shall have the capability to assign a DSN MLPP service domain on a per line basis. The switch shall have the capability to assign a default DSN MLPP service domain to a line that terminates an incoming non-ANSI T1.619a trunk call.

c. Line-to-trunk calls. The switch shall have the capability to assign a default DSN MLPP service domain to an ANSI T1.619a trunk that originates from a line that is not assigned a DSN MLPP service domain. The switch shall allow calls placed from a line with or without an assigned DSN MLPP service domain to route over non-ANSI T 1 6 19a trunks.

d. Interaction between unlike MLPP service domains. The following rules apply for calls placed between unlike DSN MLPP service domains.

(1) The switch shall allow connection (line-to-trunk, trunk-to-line, trunk-to-trunk or line-to-line) between unlike DSN MLPP service domains when resources are available.

(2) When a call is placed between unlike MLPP service domains, the switch shall class mark the DSN MLPP service domain of the connection (line-to-trunk, trunk-to-line, trunk-to-trunk or line-to-line) based on the DSN MLPP service domain that entered the switch (trunk or line).

EXAMPLE 1 (Line-to-line): If an intra-switch call is placed between two subscribers with different DSN MLPP service domains the switch shall class mark the connection with the DSN MLPP service domain of the originator

EXAMPLE 2 (Trunk-to-trunk): If an incoming call is placed to a switch via a non-ANSI T1.619a trunk (i.e. T1/E1 CAS, Analog E&M, SS7, ISDN PRI) that tandems to an ANSI T1.619a trunk, the switch shall assign the default DSN MLPP service domain to the outbound ANSI T1.619a trunk, and class mark the connection as the switch assigned default DSN MLPP service domain.

EXAMPLE 3 (Trunk-to-line): If an incoming call is placed to a switch via a non-ANSI T1.619a trunk (i.e. T1/E1 CAS, Analog E&M, SS7, ISDN PRI) that terminates to a line, the switch shall assign the default DSN MLPP service domain to the line, and class mark the connection as the switch assigned default DSN MLPP service domain.

EXAMPLE 4 (Line-to-trunk): If a call is originated from a subscriber over a non-ANSI T1.619a trunk (i.e. T1/E1 CAS, Analog E&M, SS7, ISDN PRI), the switch shall class mark the DSN MLPP service domain of the connection as the DSN MLPP service domain of the originator.

(3) MLPP interaction shall not be allowed between unlike DSN MLPP service domains.

3.8 MLPP Interactions with Common Optional Station Features and Services

This section describes the requirements for MLPP interactions with other station features and services. These features and services shall not interact adversely with mandatory MLPP features.

3.8.1 Precedence Call Waiting

[Conditional: TS, EOS, SMEO, MFS, PBX1] The following Precedence Call Waiting treatment shall apply to precedence levels of PRIORITY and above.

3.8.1.1 Busy with higher precedence call

[Conditional: TS, EOS, SMEO, MFS, PBX1] If the precedence level of the incoming call is lower than that of the existing MLPP call, precedence call waiting shall be invoked. If the incoming call is PRIORITY or above, the precedence call waiting tone (see section 5, table 5-5) shall be applied to the called party.

3.8.1.2 Busy with equal precedence call

[Conditional: TS, EOS, SMEO, MFS, PBX1] The switch shall provide the precedence call waiting signal (see section 5, table 5-5) to the called station. The switch shall apply this signal regardless of other programmed features such as call forwarding on busy, caller ID, etc. The called station shall be able to place the current active call on hold, or disconnect the current active call and answer the incoming call.

3.8.1.3 Busy with lower precedence call

[Conditional: TS, EOS, SMEO, MFS, PBX1] The switch shall preempt the active call. The active busy station shall receive continuous preemption tone until an on-hook signal is received and the other party shall receive preemption tone for a minimum of 3 seconds. After going on-hook, the station to which the precedence call is directed shall be provided precedence ringing. The station shall be connected to the preempting call after going off-hook.

3.8.1.4 No Answer

[Conditional: TS, EOS, SMEO, MFS, PBX1] If, after receiving the precedence call waiting signal, the busy called station does not answer the incoming DSN call within the maximum programmed time interval, the switch shall treat the call in accordance with paragraph 3.3.

3.8.2 Call Forwarding

[Conditional : TS, EOS, SMEO, MFS, PBX1] Call forwarding is a conditional terminating feature that is subscribed to by the called party. This feature shall permit user lines to direct calls to either another line or to an attendant. The feature will be either user activated by dialing the appropriate feature code followed by the address of the line to which calls are to be forwarded or will be assigned by the switch administrator. Calls forwarded to lines (numbers) which have call forwarding already activated may be forwarded again. The precedence level of calls shall be preserved during the forwarding process. The forwarding address may be any telephone number, subject to the class-of-service restrictions of the line activating the feature.

3.8.2.1 Call Forwarding at a Busy Station

[Conditional : TS, EOS, SMEO, MFS, PBX1] a. If the incoming call is of higher precedence level than the established call (or calls if three way calling is established) at the busy station being called, all calls to the busy station shall be preempted and the incoming call shall be established, i.e., the Call Forwarding service shall not be invoked.

b. If the incoming call is of equal or lower precedence level than the established call, (or calls if three way calling is established) at a busy station being called, the Call Forwarding service shall be invoked.

c. If the called C^2 User, Special C^2 User, or Other DSN User is nonpreemptable (is not classmarked for preemption), the Call Forwarding service shall be invoked regardless of the precedence levels of incoming call and established calls.

d. The precedence level of calls is preserved during the forwarding process, and the forwarded to user may be preempted.

e. If Call Forwarding Busy is activated, and a precedence call (PRIORITY and above) is forwarded (including possible multiple forwarding), and if this forwarded call is not responded to by any forwarded-to party within a specified period of time (typically 30 seconds), the call shall be diverted to an attendant.

3.8.2.2 Call Forwarding - No Reply at Called Station

[Conditional: TS, EOS, SMEO, MFS, PBX1]

a. The precedence level of calls is preserved during the forwarding process, and the forwarded to user may be preempted.

b. If Call Forwarding is activated by the called party and the called party has specified a forwarded-to party, the forwarding procedure shall be performed. If a precedence call (PRIORITY and above) is forwarded (including possible multiple forwarding) and is not responded to by any forwarded-to party (e.g. called party busy with a call of equal or higher precedence level; or called party busy and nonpreemptable) within a specified period of time (typically 30 seconds), the call shall be diverted to an attendant.

3.8.3 Call Transfer

[Conditional: EOS, SMEO, MFS, PBX1] There are two types of call transfers: Normal (transfer of an incoming call to another party) and Explicit (both calls are originated by the same subscriber). The switch shall provide the following interactions with both normal and explicit call transfers:

3.8.3.1 Call transfer interaction at different precedence levels.

[Conditional: EOS, SMEO, MFS, PBX1] When a call transfer (line-to-line, line-to-trunk, trunk-to-line, or trunk-to-trunk) is made at different precedence levels, the switch that initiates the transfer shall class mark the connection at the highest precedence level of the two segments of the transfer.

3.8.3.2 Call transfer interaction at same precedence levels.

[Conditional: EOS, SMEO, MFS, PBX1] The switch that initiates a call transfer (line-to-line, line-to-trunk, trunk-to-line, or trunk-to-trunk) between two segments that have the same precedence level shall maintain the precedence level upon transfer.

3.8.4 Call Hold

[Conditional: TS, EOS, SMEO, MFS, PBX1] Call Hold is a function of the serving switch and shall be invoked by going on-hook then off-hook. Held calls shall retain the precedence of the originating call. All lines are subject to normal preemption procedures.

Figure 3-3 illustrates three typical call hold scenarios. In each scenario caller #1 is on hold with caller #3 and is talking to caller #2.

In scenario 1, caller #3 receives an incoming higher precedence call from caller #4. Caller #3 receives preemption tone. Once caller #3 acknowledges the preemption tone by going on hook, the call between #4 and #3 is established when caller #3 answers caller #4. Caller #1 will also receive preemption tone only if caller #1 attempts to retrieve caller #3 while preemption tone is being sent to caller #3. (Note: preemption tone shall not be sent to caller #1 while active with caller #2. This would give caller #1 the false indication that the active call with caller #2 is being preempted.). Caller #2 remains connected to caller #1 and does not receive any preemption notification.

In scenario 2, caller #1 receives an incoming higher precedence call from caller #4. Caller #1, caller #2, and caller #3 receive preemption tone (see section 5, table 5-2). Once caller #1 acknowledges the preemption and then goes on hook, the higher precedence call from caller #4 is offered. Callers #2 and #3 are disconnected and the call between caller #4 and caller #1 is established.

In scenario 3, caller #2 receives an incoming higher precedence call from caller #4. Caller #2 receives a preemption tone. Caller #1 receives a preemption tone. The tone indicates to caller #1 that caller #2 is being preempted. Once caller #1 goes on-hook, caller #1 receives a ringback from the call on hold, caller #3.

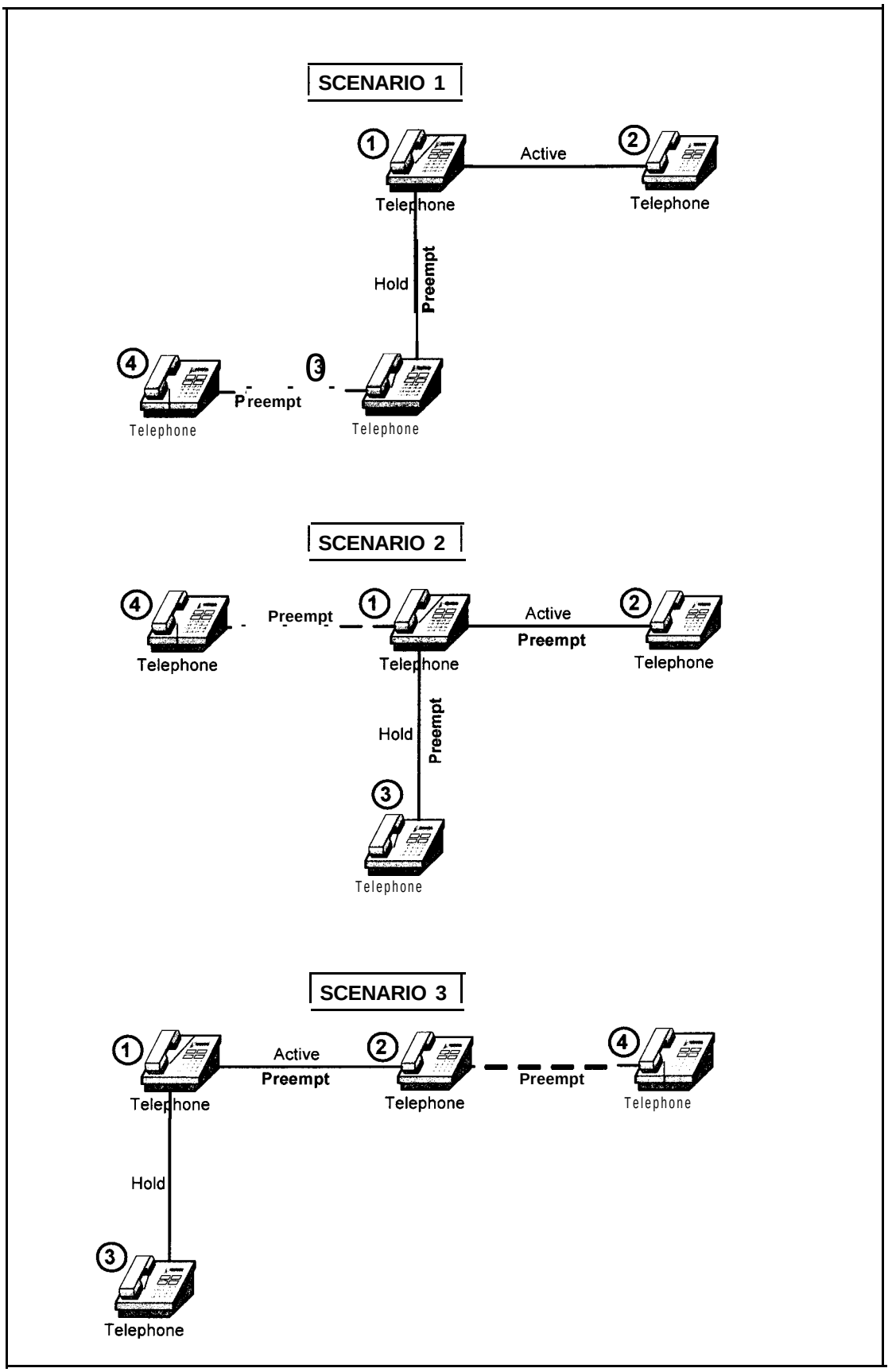

Figure 3-3. Call Hold Scenarios

3.8.5 Three-Way Calling (TWC)

[Conditional: EOS, SMEO, MFS, PBX1] In Three-Way calling, each call shall have its own precedence level. When a three-way conversation is established, each connection shall maintain its assigned precedence level.. Each connection of a call resulting from a split operation shall maintain the precedence level that it was assigned upon being added to the three-way conversation.

The switch shall class mark the originator of the three-party call at the highest precedence level of the two segments of the call. Incoming calls to lines participating in TWC that have a higher precedence than the highest of the two segments shall preempt unless the call is marked "non-preemptable".

When a higher precedence call is placed to any one of the three-way call participants, that participant receives the preemption tone (see Section 5, Table 5-5). The other two parties shall receive a conference disconnect tone as described in Table 5-5. This tone indicates to the other parties that one of the other three-way call participants is being preempted.

In a three-way conference call where each connection is established at different precedence levels, the precedence level of the participant who initiated the three way conference shall be assigned the highest precedence of the two connections.

3.8.6 Call Pick-Up

[Conditional: EOS, SMEO, MFS, PBX1] A user line that is equipped to answer any calls directed to other lines within the user's own preset pickup group, as established by an administrative facility, by dialing the appropriate feature code.

a. If a call pickup group has more than one party in an unanswered condition and the unanswered parties are at different precedence levels, a call pickup attempt in that group shall retrieve the highest precedence call first. If multiple calls of equal precedence are ringing simultaneously, a call pickup attempt in that group shall retrieve the longest ringing call first.

b. If a party in a call pickup group is busy, and an incoming precedence call is placed to that number, normal MLPP rules shall apply. This call cannot be picked up within the call pickup group unless it is an unanswered call. (provided that there are no additional features such as call waiting or call forwarding)

3.8.7 Preset Conferencing

3.8.7.1 Conference Precedence Level

[Required: TS, MFS, EOS - Conditional: SMEO, PBX1] All addresses shall be processed at a precedence level equal to that precedence level dialed by the conference originator. The preset conference equipment, and all switched connections associated with the conference, shall be protected from seizure by calls at the same or lower precedence level as that furnished in the address.

a. When a preset conference is initiated an idle bridge in the desired conference group shall be seized and the conference connections attempted.
b. If all conference bridges are busy, ROUTINE conference call attempts shall be connected to "Line Busy" tone and call attempts at precedence levels above ROUTINE shall reexamine all conference bridges on a preemptive basis.
c. A conference bridge that is busy at the lowest level of precedence stored for all units shall be preempted for a higher precedence conference call.
d. When a conference bridge is preempted, a 2-second burst of preempt tone shall be provided to the conferees on the existing conference. The existing connections to the bridge shall be dropped, and the bridge shall automatically send an on-hook signal to the associated switch ports to permit the new connections to be established.
e. Where the requesting precedence level is equal to, or lower than, that of the existing conference, the connection shall be denied and the caller shall be provided a Blocked Precedence Announcement(BPA).

3.8.8 Multiline Hunt Service

[Conditional: EOS, SMEO, MFS, PBX1]

Pilot Line Hunt:
This hunting feature is a group of access lines arranged such that a lead published number, the pilot number is called first. If the first station (pilot number) is busy, the call goes to the second and subsequent stations until an idle, or the last station in the hunt group is called. If all stations are busy, the calling party will receive a busy tone (unless other forwarding, etc., features are present on the station).

Distributed Hunt:

This hunting feature is a group of access lines arranged such that incoming calls are sent to the station in the group that has been idle the longest.

Circular Hunt:

This hunt feature is a group of access lines arranged such that if any station in the hunt group is busy, hunting starts at the next station and continues through the rest of the group. This hunting feature will rotate or search the idle status of the lines in the group at least once (one cycle) before a busy tone is sent.

MLPP Interactions, Line Hunting.

If no line is available and one or more existing calls are of lower precedence level than that of the incoming call, an existing call of the lowest precedence level within the group shall be preempted.

A Blocked Precedence Announcement (BPA) is returned only when all remaining lines in the hunt group are found busy with calls of equal or higher Precedence.

If this feature is provided, it shall be in accordance with Telcordia Technologies GR-569-CORE, *Multiline Hunt Service,* Issue 1, June 2000.

3.8.9 Community of Interest (COI)

[Required: TS, EOS, MFS - Conditional: SMEO, PBX1]

The Community of Interest (COI) service enables users to form groups, to and from which access is subject to special restrictions and privileges. The service is primarily provided for users who generate the majority of their traffic to each other.

The COI service is provided as a switch based feature as opposed to a network-wide feature (i.e. no COI information is transported between switches). The COI service is provided by specific COI screening for originating and terminating call requests. The screening is based on the COI group information and user classmarks.

Members of a specific COI can communicate among themselves, but not, in general, with users external to the COI group. Specific COI members can have additional capabilities that allow them to originate calls external to the COI group and/or to receive calls external to the COI group. Specific COI groups can be configured with additional capabilities that prevent the COI members from originating calls to other members of the COI group, or from receiving calls from other members of the COI group.

The COI service also provides specific COI precedence treatment for calls originating from a COI member and/or calls received by a COI member.

3.8.9.1 Definition of Terms

Community of Interest Group

The Community of Interest (COI) feature enables users to form groups, to and from which access is subject to special restrictions and privileges. A COI group consists of a COI Screening list, a COI Precedence level and COI group classmarks.

COI Screening List

A COI Screening list specifies individual destinations or codes representing groups of destinations. Each code in this list can be from 3 to 15 digits. Outgoing calls are screened against this list together with the COI group classmarks to either allow/deny the call request.

COI Precedence Level

This COI precedence level specifies a precedence level that is either required or allowed, depending upon the COI group classmarks, for calls to/from users of a COI group.

COI Member

A user that has a COI group assigned is defined as being a member of that COI group.

Calls internal and external to COIs

The COI is a switch based feature as opposed to a network-wide feature i.e. no COI information is transported between switches. Calls are defined as being internal to the COI if:

- for an outgoing call request, the dialed destination matches a code in the user's COI screening list
- for local calls only, an incoming call request is to a user who is assigned to the same COI group as the calling user.

All other local calls to/from a COI member, including incoming inter-switch call requests received via trunk facilities, are treated as external calls to the COI. Call requests received via incoming trunk facilities are also deemed external but these do not undergo any COI screening and hence are not subject to the special COI restrictions and privileges.

COI GROUP CLASSMARKS

The COI group classmarks specify the outgoing and incoming call restrictions/privileges for calls internal to the COI group. The COI group classmarks are defined below:

COI Outgoing Classmarks

A COI group user with no outgoing classmarks limits the COI user to making calls which are internal to the COI only, i.e. to only those destination codes which are specified within the COI screening list. The user is allowed to exercise the normal authorized precedence level for these calls.

Outgoing precedence allowed

The COI user is allowed to exercise up to and including the COI precedence for calls internal to the COI.

Outgoing precedence mandatory

Only COI precedence calls are permitted for calls internal to the COI.

Outgoing calls barred within the COI

This restriction means that a COI user cannot make calls to destination codes specified in the COI screening list.

COI Incoming Classmarks

A COI group user with no incoming classmarks limits the COI user to receiving local calls from members of those COIs of which the user is a member. All other local calls are restricted. There is no restriction on calls received over trunk facilities since these do not undergo COI screening.

Incoming precedence mandatory

This COI service only permits calls internal to the COI that are at the COI precedence level. This only applies for local calls, which are internal to the COI (i.e. if the local calling user is a member of those COIs of which the user is a member).

Incoming calls barred within the COI

This restriction means that a COI user cannot receive calls from members of those COIs of which the user is a member. Unless the member classmark incoming access option is applied, calls from other non-CO1 members or other COI members are also restricted.

COI member classmarks

In addition to the COI group classamrks that are part of the COI group, specific COI members can also have COI classmarks at the subscriber level that specify the type of incoming and outgoing call restrictions/privileges for calls external to the COI.

COI Outgoing access

Outgoing access allows a COI user to make calls external to the COI, i.e. to all other destination codes not specified in the COI screening list, i.e. external to the COI. The user is only allowed to exercise the normal authorized precedence level for these calls.

Incoming access

Incoming access allows a COI user to receive local calls from all other non-CO1 users and also from those other COI users who allow outgoing access.

Incoming access with precedence

Incoming access with precedence allows a COI user to receive only local COI precedence level calls from all other non-CO1 users and also from those other COI users who allow outgoing access.

3.8.9.2 Feature Requirements

The Community of Interest (COI) feature enables users to form groups, to and from which access is subject to special restrictions and privileges. A user that has a COI group assigned is defined as being a member of that COI group. A specific user may be a member of up to eight different COI groups. The switch shall support a minimum of 24 COI groups.

Essentially, normal call establishment procedures apply, but to provide the COI service the switch screens the call request in conjunction with the COI information of the calling and/or the called user together with the COI user classmarks. As a result of this analysis, the call either fails (i.e. routed to intercept) for COI reasons or is allowed to proceed. Depending on whether the call fails due to a precedence check or a destination screening check, the intercept treatment applied is either "precedence blocked" or "destination not allowed".

3.8.9.2.1 COI Screening treatment for Originating Call Requests

[Required: TS, EOS, MFS - Conditional: SMEO, PBX1] To provide COI service for outgoing calls, the switch analyzes the call request in conjunction with the COI data of the calling user. If the call is internal to the COI, i.e. the dialed destination matches a code in the user's COI screening list, then the COI group classmarks are used to either fail the call or allow it to proceed.

In cases where a user is a member of more than one COI, the call is screened against each COI screening list, in the order the COIs were assigned to the user, until a match of the dialed destination and precedence is found. If a match is found, the call is treated as being internal to that COI and the COI group classmarks are used to either fail the call or allow it to proceed. If there is no such match, then the first COI that has a match on the dialed destination is chosen as the COI. If there is no COI that has a match on the dialed destination, then the call is deemed external to the COI.

If the call is external to any of the COIs assigned to the user, then the user's classmarks are used to either fail the call or allow it to proceed.

Table 3-7 describes the COI screening treatment for the different COI group classmarks and the COI member classmarks for an originating call request.

Table 3-7. COI Checks for an originating call request.

Calling User	Internal / External To COI	COI group Outgoing Call (OG) classmark	COI member Classmark	Disposition of Originating Call Request
COI Member	Internal	None	X	Allowed - User can exercise normally authorizec precedence level

		OG Precedence Allowed	X	Allowed - User can exercise up to and including the COI precedence level
		OG Precedence Mandatory	X	Allowed - Only with the COI precedence level, else denied
		OG Calls Barred within co1	X	Denied - COI restriction
	External	X	None	Denied - COI restriction
			COI OG Access	Allowed - User can exercise normally authorized precedence level
No COI Assigned	X		X	Normal call and precedence handling

X = Don't Care

3.8.9.2.2 COI Screening treatment for Terminating Call Requests

[Required: TS, EOS, MFS - Conditional: SMEO, PBX1] To provide COI service for incoming calls, the switch analyzes the call request in conjunction with the COI data of the called user and calling user for local calls and the COI data of the called user for calls external to the switch.

If the call is external to the COI, the called COI member's classmarks, are used to either fail the call for COI reasons or allow it to proceed. The following calls are external to the COI:

- calls incoming on inter-switch trunk facilities
- calls from local users who are not members of any COI groups
- calls from local users who are not members of the called users COI group

If the COI members' classmark's indicate that incoming access is allowed only with COI precedence calls, then the called user's COI's precedence is used to determine if access is allowed or denied. In cases where a called user is member of more than one COI, the call is screened against each COI screening list, in the order the COIs were assigned to the user, until a match of the call precedence is found. If a match is found, the call is allowed, otherwise it is denied.

If the call is internal to the COI, i.e. calls from local users who are members of the same COI group as the called user, the COI's group classmarks are used to either fail the call for COI reasons or allow the call to proceed.

Table 3-8 describes the COI screening treatment for the different COI group classmarks and the COI member classmarks for a terminating call request.

Table 3-8. COI Checks for a Terminating call request.

Called User	Internal / External to co1	COI Group Incoming Call (IC) Classmark	COI member (Classmark	Disposition of Terminating Call Request
No COI Assigned	x		X	Norma1 call and precedence handling
COI Member	Internal	None	X	Allowed - Precedence handling per normal
		IC Precedence Mandatory	X	Allowed only if call precedence matches COI precedence
		IC Calls Barred within COI	X	Denied - COI restriction
	External (local calls)	X	None	Denied - COI restriction
			COI IC Access	Allowed - Precedence handling per normal
			COI IC Access with Precedence	Allowed only if call precedence matches CO1 precedence
	External Trunk calls	X	X	Allowed – These calls are handled as normal. There is no COI screening performed for these calls

X = Don't Care

3.8.9.2.3 Billing

Call detail recording already records the call precedence level, which may be escalated due to the COI service. There are no additional call detail recording requirements for the COI feature.

3.8.9.2.4 Traffic

There are no additional traffic requirements for the COI service.

3.9 MLPP Common Channel Signaling Number 7 (CCS7)

[Required: TS, MFS, EOS - Conditional: SMEO] Requirements for MLPP CCS7 shall be in accordance with ANSI Standards T1.6 19- 1992 and Tl-6 19a- 1994.

3.9.1 General Description

Common Channel Signaling System No. 7 (i.e., SS7 or C7) is a global standard for telecommunications defined by the International Telecommunications Union (ITU) Telecommunication Standardization Sector (ITU-T). The standard defines the procedures and protocol by which network elements in the public switched telephone network (PSTN) exchange

information over a digital signaling network to effect wireless (cellular) and wire line call setup, routing and control. The ITU definition of SS7 allows for national variants such as the American National Standards Institute (ANSI) and Bell Communications Research (Telcordia Technologies) standards used in North America and the European Telecommunications Standards Institute (ETSI) standard used in Europe.

The SS7 network and protocol are used for:

- basic call setup, management, and tear down
- wireless services such as personal communications services (PCS), wireless roaming, and mobile subscriber authentication
- local number portability (LNP)
- toll-free (800/888) and toll (900) wire line services
- enhanced call features such as call forwarding, calling party name/number display, and three-way calling
- efficient and secure worldwide telecommunications

3.9.2 Definitions

a. MLPP Service Domain: An MLPP service domain consists of a set of MLPP subscribers (MLPP users) and the network and access resources that are in use by that set of MLPP subscribers at any given time. Connections and resources that are in use by MLPP subscribers may only be preempted by higher precedence calls from MLPP subscribers within the same domain. The service domain is a three octet field with a range from 00 00 00 to FF FF FF in hexadecimal. The DSN service domain is zero (0).

b. Network: In this standard, "network" refers to all telecommunications equipment that has any part in processing a call or a supplementary service for the user referred to. It may include local exchanges, transit exchanges, and NT2s but does not include the ISDN terminal and is not limited to the "public" network or any other particular set of equipment.

c. MLPP Call: An MLPP call is a call that has a precedence level established and is ether being setup or is setup. In SS7, an MLPP call is a call with a precedence level for which the exchange has sent an initial address message (IAM) but has not sent or received a release (REL) message

d. Preemptable Circuit: A Preemptable circuit is a circuit that is active with or reserved for an MLPP call: (a) within the same domain as the preempting call and (b) with a lower precedence that the preempting call. A busy or reserved circuit for which a precedence level has not been specified is not a preemptable circuit.

e. Preemption initiating exchange: A preemption initiating exchange is the exchange that is congested (i.e. no idle circuits) and has received a preempting call setup.

3.9.3 Look-Ahead For Busy (LFB)

[Conditional: TS, MFS, EOS, SMEO] Look-Ahead For Busy (LFB) is an information unit used to find out whether network resources are available to support the higher precedence call.

The switch shall provide the LFB feature in accordance with ANSI Standards T1.619-1992 and T1-619a-1994.

3.9.4 Precedence Parameters

[Required: TS, MFS, EOS - Conditional: SMEO] The MLPP CCS7 Initial Address Message (IAM) shall contain the Precedence Parameter and subfields as shown in table 3-9. The subfields in the precedence parameter identify the precedence level, the network identification and domain, and whether a path has been reserved or path reservation is allowed.

In case of congestion, IAMs carrying FLASH or FLASH OVERRIDE calls shall be assigned Level 3, IMMEDIATE calls shall be assigned level 2, PRIORITY calls shall be assigned level 1, and ROUTINE calls shall be assigned level 0 in the CCS7.

Table 3-9. Precedence Parameter and Sub Fields

Bit:	8	7	6	5	4	3	2	1
Octet 1	Spare		LFB			Spare	Precedence Level	
2	1st Network Identity Digit						2nd Network Identity Digit	
3	3rd Network Identity Digit						4th Network Identity Digit	
4	Most Significant Bit (DSN MLPP Service Domain 1st Octet)							
5	DSN MLPP Service Domain (2nd Octet)							
6	Least Significant Bit (DSN MLPP Service Domain 3rd Octet)							

The following codes are used in the Precedence parameter subfields:

Octet 1:

Bit 8 (Spare)

Bits 7-6	(Look Forward Busy (LFB))
00	LFB allowed
10	LFB not allowed
01	Path reserved
11	Spare

Bits 5	(Spare)

Bits 4 3 2 1	(Precedence level)
0000	(FLASH OVERRIDE-hightest)
0001	(FLASH)
0010	(IMMEDIATE)
0011	(PRIORITY)
0100	(ROUTINE-lowest)
0101 to 1111	(Spare)

Octets 2-3 contain a code for Network identity (NI). Each digit is coded in binary coded decimal representation from 0 to 9. The first digit of this field is coded 0. The Telephony Country Code (TCC) follows in the second to fourth NI digits (the most significant TCC digit is in the second NI digit). If the TCC is one or two digits long, the excess digits(s) is inserted with the code for RPOA or network identification, if necessary. If octet 3 is not required, it is coded all zeros.

Octets 4-6 contain a code expressing in pure binary representation the number allocated to an MLPP service domain. These numbers are allocated from the set of National Business Group Identifier codes in accordance with the procedures in Annex B, in chapter T1.119.9 of ANSI T1.113.

3.9.4.1 Actions Required at Originating Exchange

[Required: MFS, TS, EOS - Conditional: SMEO] Routing information in the MLPP CCS7 shall be supplied by the originating exchange. However, the design shall not preclude requests to a remote database for routing information.

3.9.4.2 MLPP CCS7 Transaction Capability Application Part (TCAP) - Definitions and Functions of Transaction Capability (TC) Operations, Parameters, and Error Codes

[Required: MFS, TS, EOS - Conditional: SMEO] The MLPP CCS7 functions and encoding for the Operation, Parameter and Error Code elements used by the TCAP protocol shall be as specified in ANSI T1.114.5-2000. DSN-specific requirements not covered by the ANSI standards are specified in the following paragraphs, citing the applicable sections of the ANSI standard.

3.9.4.2.1 Parameters

[Required: MFS, TS, EOS - Conditional: SMEO] Several DSN-specific parameters needed to support the MLPP service are specified in the following paragraphs, citing the applicable sections in the ANSI standard if they exist:

3.9.4.2.1.1 Bearer Capability Supported - 10010011

[Required: MFS, TS, EOS - Conditional: SMEO] This parameter indicates whether or not a requested bearer capability is supported and is used to indicate the reason a bearer capability requested was not available. The format of the Bearer Capability Supported parameter is illustrated in Figure 18/T1.114.5. The contents of this parameter are defined and coded as follows:

1. 00000001 – bearer capability is not supported.
2. 00000010 – bearer capability is supported.
3. 00000011 – bearer capability is not authorized.
4. 00000100 – bearer capability is not presently available.
5. 00000101 – bearer capability is not implemented.

3.9.4.2.1.2 Circuit Identification Code – 10011010

[Required: MFS, TS, EOS - Conditional: SMEO] The Circuit Identification Code parameter is used to identify the physical path between two exchanges. The parameter is coded contextual, is 2 octets in length and is of the type OCTECT STRING. The format and coding is as described in T1.113.3 Section 1.2.

3.9.4.2.1.3 Call Reference – 10011100

[Required: MFS, TS, EOS - Conditional: SMEO] The Call Reference parameter is used to identify a particular MLPP call within an exchange independent of the physical circuits. The parameter is six octets in length and is of the type OCTECT STRING. The format contents are as specified in ANSI T1.113.3, section 3.5 and Figure 7/T1.113.3.

3.9.5 RELEASE Message Cause Values

[Required: TS, MFS, EOS -Conditional: SMEO] The MLPP CCS7 RELEASE message shall contain the following CAUSE values as defined in the ANSI Standards T1.619-1992 and T1-619a-1994 as shown in table 3- 10 below

Table 3-10. RELEASE Message Cause Values

RELEASE Message Cause Value	Description
8	Answered or Unanswered Call; Circuit is not to be Reused
9	Answered or Unanswered Call; Circuit is to be Reused
46	Unavailable Resources; Precedence Call is Blocked with Equal or Higher Precedence Calls

3.9.6 DSN MLPP CCS7 Initial Address Message (IAM) Called Party Number Format

[Required: TS, MFS, EOS - Conditional, SMEO]. The MLPP CCS7 IAM called party number format shall be as shown in table 3- 11.

Table 3-l 1. DSN Switch MLPP CCS7 IAM Called Party Number Format

Route Digit	Route Control Digit	Area Code	Switch Code	Line Number
X	[Y]	(KXX)	KXX	XXXX

Where: X is any digit 0 - 9
K is any digit 2 - 8
Y is any digit 0 - 3

Note: Digits shown in brackets [ ] are only required for TS and MFS switches and are not present on all calls. Digits shown in parenthesis ( ) are not present on all calls.

3.10 Channel associated signaling to Common channel signaling (CAS-to-CCS) trunk inter-working in a mixed media network

[Required: TS, MFS, EOS - Conditional: SMEO] The goal of the DISN is to migrate to a fully capable digital network that supports local and network ISDN services. The network of DSN telecommunications switches currently consists of a mixture of digital and analog transmission media. The DSN network migration is engineered to support discrete and selective routing that will allow clear-channel data transmission controllable by use of the route digit. The method used to ensure proper routing is based on the DSN World Wide Numbering and Dialing Plan (WWNDP).

Mixed-media backbone utilizes various modes of signaling consisting of intra-switch/inter-switch terminations that will ensure clear-channel data transmission of speeds up to 56 Kbps on a network basis. The DSN also supports Switched 64 Kbps (SW64) clear-channel transmission through selective routing using channel associated signaling (CAS) on PCM-30 (E-l) terminations and common channel signaling (CCS) protocols such as ISDN PRI and DSN SS7 on both PCM-24 (B8ZS/ESF) PCM-30 terminations.

The switch shall support the required Circuit Switched System call-processing treatment/handling of call types (line-to-trunk, trunk-to-line, and trunk-to-trunk) in a mixed-media backbone by the use of the DSN WWNDP as shown in tables 3-12 and 3-13 below. The switch shall support this call-processing treatment/handling of calls with the DSN WWNDP formats described in paragraph 4.5.2. The switch shall support the call-processing treatment/handling of calls as shown in tables 3-12 and 3-l 3 using CAS MFR1 2/6 signaling. If the SMEO supports CAS MFR1 2/6 signaling the call-processing treatment/handling of calls as shown in tables 3-12 and 3-l 3 are required.

Route selection for CCS data routes (circuit mode data) and CAS data routes with route digits 1 (Switched Data) or 6 (Hotline Data) shall not include:

- Analog trunks
- Trunks with data compression.
- A-law to u-law and/or u-Law to A-Law conversions.
- Data restrictions.

If the bearer capability (BC) of speech or 3.1K audio conflicts with data route digits 1 or 6 then no A-law to u-law or u-Law to A-Law conversions will be performed. If a BC of 56 Kbps (restricted or unrestricted) or 64 Kbps (restricted or unrestricted) conflict with a voice route digit of 0 or 5, then no conversion will be performed. ISDN PRI call handling/treatment does not use the dialed route digit in accordance with the DSN WWNDP; however, when the originator dials the data route code the switch shall assign the appropriate bearer capability (i.e. 56 Kbps data, 64 Kbps data etc.) All tandem calls of the same media type (i.e., SS7-to-SS7, CAS-to-CAS, PRI-to-PRI) are

transparent. Tandem calls of different media-type shall follow the treatment/call handling in accordance with tables 3-l 2 and 3-13 below. Signaling System No.7 (SS7) shall be considered conditional for the Small End Office.

Table 3-12. CAS-to-CCS Trunk Interworking Matrix (Line-to-Trunk and Trunk-to-Line)

Ref #	Originating (Term/Trunk)	Route Digit	Bearer Capability	Terminating (Term/Trunk)	Route Digit	Bearer Capability
Line-to-Trunk						
1	Analog User	0/5	N/A	T1 CAS	0/5	N/A
2	Analog User	0/5	N/A	T1 SS7*	0/5	SP
3	Analog User	0/5	N/A	E1 CAS	0/5	N/A
4	Analog User	0/5	N/A	E1 SS7*	0/5	SP
5	Analog User	0/5	N/A	T1 PRI	N/A	SP
6	Analog User	0/5	N/A	E1 PRI	N/A	SP
7	Analog User	1/6	N/A	T1 CAS	1/6	N/A
8	Analog User	1/6	N/A	T1 SS7*	1/6	SP
9	Analog User	1/6	N/A	E1 CAS	1/6	N/A
10	Analog User	1/6	N/A	E1 SS7*	1/6	SP
11	Analog User	1/6	N/A	T1 PRI	N/A	SP
12	Analog User	1/6	N/A	E1 PRI	N/A	SP
13	ISDN BRI	0/5	SP	T1 CAS	0/5	N/A
14	ISDN BRI	0/5	SP	T1 SS7*	0/5	SP
15	ISDN BRI	0/5	SP	E1 CAS	0/5	N/A
16	ISDN BRI	0/5	SP	E1 SS7*	0/5	SP
17	ISDN BRI	0/5	SP	T1 PRI	N/A	SP
18	ISDN BRI	0/5	SP	E1 PRI	N/A	SP
19	ISDN BRI	1/6	SP	T1 CAS	1/6	N/A
20	ISDN BRI	1/6	SP	T1 SS7*	1/6	SP
21	ISDN BRI	1/6	SP	E1 CAS	1/6	N/A
22	ISDN BRI	1/6	SP	E1 SS7*	1/6	SP
23	ISDN BRI	1/6	SP	T1 PRI	N/A	SP
24	ISDN BRI	1/6	SP	E1 PRI	N/A	SP
~~25~~	~~ISDN BRI~~	~~0/5~~	~~56K CMD~~	~~T1 SS7*~~	~~1/6~~	~~56K CMD~~
26	ISDN BRI	0/5	56K CMD	E1 CAS	1/6	N/A
27	ISDN BRI	0/5	56K CMD	E1 SS7*	1/6	56K CMD

Table 3-12. CAS-to-CCS Trunk Interworking Matrix (Line-to-Trunk and Trunk-to-Line)						
Ref #	**Originating (Term/Trunk)**	**Route Digit**	**Bearer Capability**	**Terminating (Term/Trunk)**	**Route Digit**	**Bearer Capability**
28	ISDN BRI	0/5	56K CMD	T1 PRI	N/A	56K CMD
29	ISDN BRI	0/5	56K CMD	E1 PRI	N/A	56K CMD
30	ISDN BRI	0/5	64K CMD	T1 SS7*	1/6	64K CMD
31	ISDN BRI	0/5	64K CMD	E1 CAS	1/6	N/A
32	ISDN BRI	0/5	64K CMD	E1 SS7*	1/6	64K CMD
33	ISDN BRI	0/5	64K CMD	T1 PRI	N/A	64K CMD
34	ISDN BRI	0/5	64K CMD	E1 PRI	N/A	64K CMD
35	ISDN BRI	0/5	64K CMD	T1 CAS	1/6	N/A
36	ISDN BRI	1/6	56K CMD	T1 SS7*	1/6	56K CMD
37	ISDN BRI	1/6	56K CMD	E1 CAS	1/6	N/A
38	ISDN BRI	1/6	56K CMD	E1 SS7*	1/6	56K CMD
39	ISDN BRI	1/6	56K CMD	T1 PRI	N/A	56K CMD
40	ISDN BRI	1/6	56K CMD	E1 PRI	N/A	56K CMD
41	ISDN BRI	1/6	64K CMD	T1 CAS	1/6	N/A
42	ISDN BRI	1/6	64K CMD	T1 SS7*	1/6	64K CMD
43	ISDN BRI	1/6	64K CMD	E1 CAS	1/6	N/A
44	ISDN BRI	1/6	64K CMD	E1 SS7*	1/6	64K CMD
45	ISDN BRI	1/6	64K CMD	T1 PRI	N/A	64K CMD
46	ISDN BRI	1/6	64k CMD	E1 PRI	N/A	64K CMD
Trunk-to-Line						
47	T1 CAS	0/5	N/A	Analog User	N/A	N/A
48	T1 SS7*	0/5	SP	Analog User	N/A	N/A
49	E1 CAS	0/5	N/A	Analog User	N/A	N/A
50	E1 SS7*	0/5	SP	Analog User	N/A	N/A
51	T1 PRI	0/5	SP	Analog User	N/A	N/A
52	E1 PRI	0/5	SP	Analog User	N/A	N/A
53	T1 CAS	1/6	N/A	Analog User	N/A	N/A
54	T1 SS7*	1/6	SP	Analog User	N/A	N/A
55	E1 CAS	1/6	N/A	Analog User	N/A	N/A
56	E1 SS7*	1/6	SP	Analog User	N/A	N/A
57	T1 PRI	1/6	SP	Analog User	N/A	N/A
58	El PRI	1/6	SP	Analog User	N/A	N/A
59	T1 CAS	0/5	N/A	ISDN BRI	N/A	SP
60	T1 SS7*	0/5	SP	ISDN BRI	N/A	SP

Table 3-12. CAS-to-CCS Trunk Interworking Matrix (Line-to-Trunk and Trunk-to-Line)

Ref #	Originating (Term/Trunk)	Route Digit	Bearer Capability	Terminating (Term/Trunk)	Route Digit	Bearer Capability
61	E1 CAS	0/5	N/A	ISDN BRI	N/A	SP
62	E1 SS7*	0/5	SP	ISDN BRI	N/A	SP
63	T1 PRI	N/A	SP	ISDN BRI	N/A	SP
64	E1 PRI	N/A	SP	ISDN BRI	N/A	SP
65	T1 SS7*	1/6	SP	ISDN BRI	N/A	SP
66	El PRI	1/6	SP	ISDN BRI	N/A	SP
67	E1 SS7*	1/6	SP	ISDN BRI	N/A	SP
68	Tl PRI	N/A	SP	ISDN BRI	N/A	SP
69	T1 SS7*	0/5	56K CMD	ISDN BRI	N/A	56K CMD
70	E1 SS7*	0/5	56K CMD	ISDN BRI	N/A	56K CMD
71	T1 PRI	0/5	56K CMD	ISDN BRI	N/A	56K CMD
72	E1 PRI	0/5	64K CMD	ISDN BRI	N/A	64K CMD
73	T1 SS7*	0/5	64K CMD	ISDN BRI	N/A	64K CMD
74	E1 SS7*	0/5	64K CMD	ISDN BRI	N/A	64K CMD
75	T1 PRI	0/5	64K CMD	ISDN BRI	N/A	64K CMD
76	E1 PRI	0/5	64K CMD	ISDN BRI	N/A	64K CMD
77	T1 CAS	1/6	N/A	ISDN BRI	N/A	56K CMD
78	T1 SS7*	1/6	56K CMD	ISDN BRI	N/A	56K CMD
79	E1 SS7*	1/6	56K CMD	ISDN BRI	N/A	56K CMD
80	T1 PRI	N/A	56K CMD	ISDN BRI	N/A	56K CMD
81	E1 PRI	N/A	56K CMD	ISDN BRI	N/A	56K CMD
82	T1 SS7*	1/6	64K CMD	ISDN BRI	N/A	64K CMD
83	E1 CAS	1/6	N/A	ISDN BRI	N/A	64K CMD
84	E1 SS7*	1/6	64K CMD	ISDN BRI	N/A	64K CMD
85	Tl PRI	N/A	64K CMD	ISDN BRI	N/A	64K CMD
86	El PRI	N/A	64K CMD	ISDN BRI	N/A	64K CMD

LEGEND:

56K/64K 56/64 Kilobits per second

CMD Circuit Mode Data

N/A-Not Applicable

SP Speech or 3.1 K bearer capability

* - Signaling System No.7 (SS7) for the SMEO is conditional

Table 3-13. CAS-to-CCS Trunk Interworking Matrix (Trunk-to-Trunk)

Ref #	Incoming Trunk Type	Route Digit	Bearer Capability	Outgoing Trunk Type	Route Digit	Bearer Capability
Trunk-to-Trunk						
1	E1 CAS	1/6	N/A	T1/E1 SS7*	1/6	64K CMD
2	E1 CAS	0/5	N/A	T1/E1 SS7*	0/5	SP
3	T1 CAS	1/6	N/A	T1/E1 SS7*	1/6	56K CMD
4	T1 CAS	0/5	N/A	T1/E1 SS7*	0/5	SP
5	E1 CAS	1/6	N/A	T1/E1 PRI	N/A	64K CMD
6	E1 CAS	0/5	N/A	T1/E1 PRI	N/A	SP
7	T1 CAS	1/6	N/A	T1.E1 PRI	N/A	56K CMD
8	T1 CAS	0/5	N/A	T1/E1 PRI	N/A	SP
9	T1/E1 PRI	N/A	56/64K CMD	E1 CAS	1	N/A
10	T1/E1 PRI	N/A	SP	E1 CAS	0	N/A
11	T1/E1 PRI	N/A	56/64K CMD	T1 CAS	1	N/A
12	T1/E1 PRI	N/A	SP	T1 CAS	0	N/A
13	T1/E1 SS7*	1/6	56/64K CMD	T1 CAS	1/6	N/A
14	T1/E1 SS7*	1/6	SP	T1 CAS	1/6	N/A
15	T1/E1 SS7*	1/6	56/64K CMD	E1 CAS	1/6	N/A
16	T1/E1 SS7*	1/6	SP	E1 CAS	1/6	N/A
17	T1/E1 SS7*	0/5	SP	E1 CAS	0/5	N/A
18	T1/E1 SS7*	0/5	56/64K CMD	E1 CAS	1/6	N/A
19	T1/E1 SS7*	0/5	SP	T1 CAS	0/5	N/A
20	T1/E1 SS7*	0/5	56/64K CMD	T1 CAS	1/6	N/A
21	T1/E1 SS7*	1/6	56/64K CMD	T1/E1 PRI	N/A	56/64K CMD
22	T1/E1 SS7*	1/6	SP	T1/E1 PRI	N/A	SP
23	T1/E1 SS7*	0/5	56/64K CMD	T1/E1 PRI	N/A	56/64K CMD
24	T1/E1 SS7*	0/5	SP	T1/E1 PRI	N/A	SP

LEGEND:
56K/64K – 56/64 Kilobits per second
CMD – Circuit Mode Data
N/A – Not Applicable
SP Speech or 3.1 K bearer capability
* - Signaling System No.7 (SS7) for the SMEO is conditional

3.11 MLPP Interactions with Electronic Key Telephone Systems (EKTS) Features

3.11.1 Electronic Key Telephone Systems (EKTS)

[Conditional: MFS, EOS, SMEO, PBX1] Electronic Key Telephone Systems (EKTS) functions shall be provided by the switch as described in Telcordia Technologies GR-205-CORE, Generic *Requirements for ISDN Electronic Key Telephone Systems,* Issue 1, February 1996. Additional MLPP requirements are listed below.

3.11.1.1 Call Appearances

[Conditional: MFS, EOS, SMEO, PBX1] A call appearance shall be shared by all EKTS users. There shall not be separate call appearances for MLPP calls. All users shall be able to originate the authorized precedence level and receive all levels of precedence on a single call appearance for each DN. Each EKTS call appearance shall comply with the MLPP functionality specified in Section 3 .O.

3.11.1.2 Hold

[Conditional: MFS, EOS, SMEO, PBX1] The EKTS Hold function shall comply with the requirements of paragraph 3.8.4 Call Hold.

3.11.1.3 DN Bridging

[Conditional: MFS, EOS, SMEO, PBX1] The EKTS DN Bridging function shall comply with the requirements of paragraph 3.8.5 Three-Way Calling (TWC).

3.11.1.4 Intercom Calling

[Conditional: MFS, EOS, SMEO, PBX1] The EKTS Intercom Calling feature shall not prevent the offering of a MLPP call to any of the parties involved in an intercom call.

3.11.1.5 Abbreviated Or Delayed Ringing Treatment On Incoming Calls

[Conditional: MFS, EOS, SMEO, PBX1] Incoming MLPP calls shall be considered as 'distinctive alerting' and shall not be affected by the Abbreviated or Delayed Ringing Treatment. Precedence Alerting (Table 5-4) shall be applied to the call DN appearance and the call handled as described in Paragraph 3.6, ISDN MLPP Basic Rate Interface. If the call is not answered and the EKTS-T1 time expires, the call shall be diverted to an operator. If Call Forwarding-No Reply is invoked by the called DN, then the call forwarding procedures of Paragraph 3.8.2.2 apply at the expiration of the EKTS-Tl timer.

3.11.1.6 Bridged Call Exclusion (BCE)

[Conditional: MFS, EOS, SMEO, PBX1] The Bridged Call Exclusion feature (Automatic or Manual) shall not degrade or prevent the MLPP interactions described in this section.

3.11.1.7 Non-ISDN Users

[Conditional: MFS, EOS, SMEO, PBX1] Non-ISDN users (analog phone) can be assigned as members of the EKTS group. The non-ISDN user will share a call appearance with other members of the EKTS group and shall be able to originate the authorized precedence level and receive all levels of precedence on that shared appearance.

3.12 Backward Compatibility

This section details the requirements for interoperability of the DSN utilizing the old cause values and precedence parameters. These requirements are only needed until all DSN switches have been upgraded with the T.619a signaling.

3.12.1 Precedence Parameter

[Conditional: MFS, EOS, SMEO, PBX1] New DSN switches must interoperate with both the current 1992/1 994 ANSI T1 .113 MLPP CCS7 Initial Address Message (IAM) which contains the precedence parameter six octet field shown in Figure 3-9 of this GSCR as well as the 1988 ANSI T1 . 113, paragraph 3 .8 precedence parameter that are found in the Calling Party Category. The 1988 precedence values are:

1 – ROUTINE

2 – PRIORITY

3 – IMMEDIATE

4 – FLASH

5 – FLASH OVERRIDE

3.12.2 Cause Values & Location Codes

[Conditional: MFS, EOS, SMEO, PBX1] The supplement to ANSI T1.619-1992, ANSI T1.619a-1994, revised the standard so that the exchange-to-exchange signaling is consistent with ITU-T recommendations, which were approved after the publication of ANSI T1.619-1992.

The use of cause value #45, preemption, shall continue to be used as described in ANSI T1.619-1992. This shall not conflict with the use of cause values #8 & #9, as described in ANSI T1.619a-1994 (Supplement to ANSI T1.619- 1992). The corresponding location code for each cause value (45, 8, and 9) shall operate as described in ANSI T1.619-1992 and ANSI T1.619a-1994.

3.13 Network Management Manual Controls

[Required: TS, EOS, MFS - Conditional: SMEO] Call gapping shall not apply to FLASH and FLASH OVERRIDE calls. In addition, FLASH and FLASH OVERRIDE calls shall be exempt from "Cancel to" (CANT) and "Cancel from" (CANF). See Section 9.6 for details.

3.14 Data Collection

[Required: EOS, SMEO, MFS] The settable fields for Call Detail Recording (CDR) shall be as shown in Section 9, Table 9-l. All DSN call data must identify the precedence level of the call.

SECTION 4 - Call Processing

4.0 Introduction

This section covers the call processing requirements of DSN switching systems. The section is modeled after the Telcordia GR-505-CORE, *Call Processing,* Issue 1, December 1997. It describes originating and terminating calls involving individual lines and DSN unique call processing associated with military unique features (MUFs). No feature or function specifically identified in this GSCR or in the referenced standards shall prevent the completion or connection of a PRIORITY or higher precedence call. Call processing includes the following subject areas:

- Origination Treatments
- Termination Treatments
- Release Treatment
- Interruption Treatment
- Routing
- Dual Homing
- Spill Forward Control
- User Access Line *call processing*
- PBX Access Lines
- Preemption In the Network
- Glare Resolution
- Code Interpretation
- Screening

The requirements in GR-505-CORE shall be followed for processing DSN ROUTINE calls. This section specifies the requirement for processing DSN Precedence Calls and other DSN unique call processing requirements.

4.1 Call Treatments

Call treatments describe the interactions between a local switching system and a line or trunk during call processing and explains associated system actions required. The treatments are: origination, termination, release, and interruption.

4.1.1 Origination Treatment

[Required: TS, EOS, MFS, SMEO, PBX1, PBX2] Origination covers processing a call from the detection of a seizure until either the call is abandoned or complete code information has been received. Release treatments for ISDN and CCS7 lines and trunks are not required on DSN

switching systems that do not include ISDN and CCS7 capabilities. DSN origination treatment shall be as specified in Telcordia Technologies GR-505-CORE, *Call* ***Processing,*** Issue 1, December 1997, paragraph 3 and all subparagraphs. In addition the following origination treatments are required.

4.1.1.1 Originating Busy

[Required: TS, EOS, MFS, SMEO, PBX1, PBX2] The originating line or trunk shall be marked originating busy when a seizure is recognized by the switch. Calls in an originating busy condition shall not be preempted until after the precedence level is determined. The precedence level shall be determined any time after the first digit is presented or dialed but no later than the last digit.

4.1.2 Termination Treatment

[Required: TS, EOS, MFS, SMEO, PBX1, PBX2] Termination covers processing a call from the point at which the system has received sufficient code information to determine the destination until either the call is answered and a transmission path is established, or until the appropriate treatment has been applied to calls that cannot be completed. Release treatments for ISDN and CCS7 lines and trunks are not required on DSN switching systems that do not include ISDN and CCS7 capabilities. DSN termination treatment shall be as specified in Telcordia Technologies GR-505-CORE, ***Call*** Processing, Issue 1, December 1997, paragraph 4 and all subparagraphs. In addition the following termination treatments are required.

4.1.2.1 Busy or Idle Status

[Required: TS, EOS, MFS, SMEO, PBX1, Conditional: PBX2] Lines or trunks preempted and marked for reuse shall be marked busy at the precedence level of the preempting call.

4.1.3 Release Treatment

[Required: TS, EOS, MFS, SMEO, PBX1, PBX2] Release treatment is the actions that the switching system shall take in response to disconnect signals when a call is in the talking state. DSN release treatment for reasons other than preemption shall be as specified in Telcordia Technologies GR-505-CORE, *Call* ***Processing,*** Issue 1, December 1997, paragraph 5. Release treatments for ISDN and CCS7 lines and trunks are not required on DSN switching systems that do not include ISDN and CCS7 capabilities.

4.1.4 Interruption Treatment

[Required: TS, EOS, MFS, SMEO, PBX1, PBX2] Interruption treatment is the response to requests for interruption of a call in progress. DSN interruption treatment shall be as specified in Telcordia Technologies GR-505-CORE, *Call* ***Processing,*** Issue 1, December 1997, paragraph 6.

4.1.5 Connections

[Required: TS, EOS, MFS, SMEO, PBX1, PBX2] DSN Switches shall provide switched service connections as specified in Telcordia Technologies GR-505-CORE, *Call Processing,* Issue 1, December 1997, paragraph 2.3 and all subparagraphs.

4.1.6 Class of Service

[Required: TS, EOS, MFS, SMEO – Conditional: PBX1, PBX2] The switch shall provide classmarks to indicate each separate privilege, restriction, or special instruction for processing incoming and outgoing calls. The switch shall have the capability to assign classmarks in any combination to a single station line, access line, number code, trunk, or group of trunks. A minimum of 256 classmarks shall be provided. A subset of classmarks for trunk/trunk group shall include as a minimum the following:

a. Separate Trunk/Trunk Group for originating and terminating for each precedence level ("ROUTINE thru FLASH-OVERRIDE" inclusive) traffic without local preemption. This feature shall not interfere with normal DSN network preemption and shall be allowed on DSN local adjacent access connections (i.e., VTC dedicated systems/NGN campus networks) and shall be allowed on the DSN network access connections to non-DSN networks i.e., NCN/PSTN/NGN networks, etc.).

b. All categories of trunk/trunk group listed above shall be capable of additional and independent classmarks to control voice only; data only; and, voice and data combined and additional and independent classmarks to control traffic based on the transmission medium selected i.e., Terrestrial/Satellite; Clear/Compressed; Echo Cancelled/Non-Echo Cancelled, etc.

4.2 Primary and Alternate Routing

[Required: TS, MFS] DSN tandem level switches shall be capable of routing all calls to a primary route and up to nine alternate routes. Each route shall have the capability of including a minimum of four (4) trunk groups or subtrunk groups for separately grouping various categories of traffic such as voice, data, satellite, and terrestrial transmission.

[Required: EOS, SMEO] DSN EOS and SMEO switches shall be capable of routing all calls to a primary route and to at least five (5) alternate routes with a minimum of one (1) trunk group per route and up to 96 trunk members per trunk group.

4.3 User Access Line Call Processing (Non-CCS/ISDN Type)

4.3.1 Ear & Mouth (E&M) Lead Signaling States

[Conditional: TS, EOS, SMEO, MFS, PBX1, PBX2]
The switch shall provide E&M lead signaling states as described in table 4-l.

4.3.2 Four-Wire Analog User Access Lines

[Conditional: TS, EOS, SMEO, MFS, PBX1, PBX2]
The call processing actions relative to four-wire user lines are described in Table 4-2, and will be the same for both Type I, Type II, and Type V E&M signaling. The switch shall recognize state changes on the four-wire user access line in accordance with the criteria shown in Table 4-2.

4.3.3 Two-Wire User Access Lines

[Required: EOS, SMEO, MFS, PBX1 – Conditional: PBX2]

The switch shall provide the call processing actions as described in Table 4-3. The electrical characteristics assume that the connected user terminal equipment meets or exceeds the specification in Part 68 of the Federal Communications Commission (FCC) rules.

Table 4-l. E&M Lead Signaling States

TABLE 4-1. E&M LEAD SIGNALING STATES	
E-Lead On-Hook Transitions	The DSN switch shall recognize or send an on-hook state, or the transition to the on-hook state, when: Open (represented by a ground through 20K ohms of resistance or greater) is detected or sent on a Type I E-lead, OR The E&SG lead loop is open (the full sensor voltage of the E-lead will be present) on a Type II E-lead.
E-Lead Off-Hook Transitions	The DSN switch shall recognize or send an off-hook state, or a transition to the off-hook state, when: Ground (represented by a ground through a resistance of 150 ohms or less) is detected or sent on a Type I E-lead, OR The E&SG lead loop is closed (The SG-lead will apply ground to the E-lead) on a Type II E-lead.
M-Lead On-Hook Transitions	The DSN switch shall recognize or send an on-hook state, or a transition to the on-hook state, when: Ground (the voltage between the M-lead and ground will not exceed l volt) is detected or sent on a Type I M-lead, OR The M&SB lead loop is open (the full sensor voltage of the M-lead will be present) on a Type II M-lead.
M-Lead Off-Hook Transitions	The DSN switch shall recognize or send an off-hook state, or the transition to the off-hook state, when: Battery (in the range of -42.5 to -52.5 volts) is detected on the M-lead. The potential of the M-lead will not drop more than 2.5 volts under a 500 milliamp ere load on a Type I M-lead, OR The M&SB lead loop is closed (the SB-lead will apply battery to the M-lead) on a Type II M-lead.

Table -2. Call Processing - Four-Wire User Access Lines

TABLE 4-2. CAL	PROCESSING - FOUR-WIRE USER ACCESS LINES
Origination of ROUTINE or Precedence Calls	The DSN switch shall accept call originations from a four-wire user access line when: The station or transmission equipment requests service via an off-hook transition on its SIG OUT leads, AND The DSN switch shall react by returning dial tone on its VF OUT leads toward the station or transmission equipment. The DSN SIG OUT leads remain on-hook. The station or transmission equipment then outpulses the called number (including any precedence digits) in DTMF on its VF OUT leads toward the DSN, AND If the call is blocked or unable to complete, the DSN switch shall return the proper tone or announcement on its VF OUT leads toward the station

TABLE 4-2. CALL PROCESSING - FOUR-WIRE USER ACCESS LINES	
I	or transmission equipment. The DSN SIG OUT leads remain on-hook, AND If the call is completed, the DSN switch shall return answer supervision as an off-hook transition on its SIG OUT leads toward the station or transmission equipment. Disconnect is indicated from the station and transmission equipment end by an on-hook transition on its SIG OUT leads exceeding 180 ms. The DSN expects the station and transmission equipment to provide a release guard interval of 600-800 ms before seizing the access line for another call, OR If the four-wire access line is connected to a four-wire telephone and is allowed features invoked by switch hook flash (i.e., attendant recall, call waiting, three-way calling, conference, etc.), the disconnect window is extended to 2000 ms by the DSN.
Iermination of ROUTINE Calls	The DSN switch shall terminate ROUTINE calls to four-wire user access lines by: Returning ring back-tone to the calling party, AND Seizing the station or transmission equipment with an off-hook transition on the DSN SIG OUT leads, AND Applying ROUTINE alerting as on and off-hook transitions on the DSN SIG OUT leads. AND - The station or transmission equipment returns answer supervision as an off-hook transition on its SIG OUT leads to the DSN when the called user answers. Disconnect is indicated from either the DSN or station equipment end by an on-hook transition on the respective SIG OUT leads. The DSN switch shall invoke timed disconnect (15 seconds) on terminating calls to user access lines if the calling user remains off-hook after the access line has gone on-hook. The DSN switch shall provide a release guard interval of 600-800 ms before terminating another call to the access line.
Iermination of Precedence Calls (Access Line Idle)	The DSN switch shall terminate precedence calls to an idle four-wire user access line by: Returning precedence ringback-tone to the calling user, AND Seizing the station or transmission equipment with an off-hook transition on the DSN SIG OUT leads, AND Applying precedence alerting as on-/off-hook transitions on the DSN SIG OUT leads until the called party answers or the call is abandoned. AND The station or transmission equipment returns answer supervision as an off-hook transition on its SIG OUT leads when the called user answers, AND Disconnect is indicated from either the DSN or station equipment end by an on-hook transition on the respective SIG OUT leads. The DSN switch shall invoke timed disconnect (15 seconds) on terminating calls to user access lines.

TABLE 4-2. CAI	PROCESSING - FOUR-WIRE USER ACCESS LINES
Termination of Precedence Calls (Access Line Busy)	The DSN switch shall preempt a call in progress and terminate a precedence call to a busy four-wire user access line by: - Applying a 340 to 350 ms on-hook transition toward the station or transmission equipment on the DSN SIG OUT leads. AND - The DSN then applies preemption notification tone to its VF OUT leads until an on-hook transition is detected on the station and transmission equipment SIG OUT leads, AND - When the station and transmission equipment is on-hook, the DSN switch shall terminate the preempting call as previously described for the "Access Line Idle" call case, using precedence alerting, if the preemption was for the affected four-wire access line.

Table 4-3. Call Processing Two-Wire User Access Lines

Table 4-3. CAL , PROCESSING TWO-WIRE USER ACCESS LINES	
Idle State	While in the idle state the DSN switch shall: Provide resistance ground of a nominal 200 ohms on the tip conductor, AND Provide resistance battery of -2 1.5 to -56.5 volts dc on the ring conductor. The DSN expects the station equipment: To provide a dc resistance across the tip and ring conductors, or from either conductor to ground, greater than 15,000 ohms.
Origination of ROUTINE Precedence Calls	The DSN switch shall accept call originations from two-wire or user access lines when: The station equipment requests service by placing a dc resistance less than 23 10 ohms (including station equipment resistance) across the T and R leads, AND The DSN switch shall react by returning dial-tone on the T and R leads when it is ready to receive address digits, AND The station equipment sends the called number (including any precedence digits) in either DP or DTMF mode. AND If the call is blocked or unable to be completed, the DSN switch shall return the proper tone or announcement toward the station equipment, AND The DSN shall not return reverse battery supervision when the called user answers on the two-wire user access line.
	Disconnect shall be detected by the DSN switch if the dc resistance across the T and R leads exceeds 10,000 ohms for greater than 180 ms. This applies unless the access line is allowed special features that are activated by switchhook flash (i.e., attendant recall, call waiting, three-way calling, conference, etc.). If the switchhook flash is expected, the disconnect detection interval is extended to 2000 ms by the DSN switch.
Termination of ROUTINE and	The DSN switch shall terminate ROUTINE and higher precedence calls to two-

Table 4-3. CALL PROCESSING TWO-WIRE USER ACCESS LINES

·ecedence Calls (Access Line Idle)	wire users access lines by: - Returning ringback-tone toward the calling user, AND - Applying ringing generator toward the station equipment as an ac voltage of 92.5 ± 32.5 volts at 20 Hz ± 3 Hz, superimposed on -21.5 to -56.5 volts dc, AND - The cadence of the ringing toward the station equipment is 2 seconds ON, followed by 4 seconds OFF for ROUTINE calls. For precedence calls, ringing toward the station equipment is 1.65 seconds ON, followed by 3.5 seconds OFF. The appropriate cadence is continued until the called party answers or the calling party goes on-hook AND - While in the ringing state, the station equipment must: - Not allow more than 3 mA of dc current to flow. - Maintain an impedance across the T and R leads greater than 1400 ohms. - Maintain a dc resistance across the T and R leads, or from either T and R to ground, greater than 10,000 ohms, AND - Removing ringing generator (ring trip): - Shall occur when a dc resistance less than 23 10 ohms (including station resistance) is applied across the T and R leads. - May occur during the ringing generator on interval. The DSN switch shall remove the ringing voltage within 200 ms after detecting ring trip. - May occur during the ringing OFF (or silent) interval. Ringing transient and timing parameters are: Off-hook transitions from the station equipment less than 12 ms in duration shall be ignored and shall not cause ring trip, AND If ring trip occurs during the ringing generator ON period, the DSN switch shall remove ringing generator within 200 ms, AND Ring trip transitions with the DSN line interface circuitry shall not cause an open interval (or battery feed interruption) exceeding 20 ms, AND Ring trip without sustained answer supervision from the station equipment shall cause ringback-tone to remain toward the calling user. Upon detection of a valid answer from the station equipment, the DSN switch shall: Remove ringback-tone toward the calling user, AND Cut through the calling and called user. Disconnect is indicated from the station equipment when the DC resistance across the T and R leads exceeds 10,000 ohms for: 180 ms if the calling user is also on-hook, OR 15 seconds if the calling user is still off-hook. If the called user goes off-hook during this interval, normal conversation will continue, OR 2000 ms if switchhook flash activated features are allowed.
ermination of Precedence Calls	The DSN switch shall preempt a call in progress and terminate a precedence call to

Table 4-3. CALL PROCESSING TWO-WIRE USER ACCESS LINES	
(Access Line Busy)	a busy two-wire user access line by: Applying preemption notification tone to the T and R leads until the subscriber equipment goes on-hook, AND Terminating the call as previously described for a precedence call to an idle two-wire user access line, if the preemption was for the affected two-wire access line.

4.3.4 Termination to Analog Lines

4.3.4.1 Busy/Idle Status

[Required: EOS, SMEO, MFS, PBX1] Lines or trunks preempted and marked for reuse shall be marked busy at the precedence level of the preempting call.

4.4 DSN Interswitch Trunk(IST) Call Processing (Non-CCS/ISDN Type)

4.4.1 Originating Call Processing

[Required: TS, EOS, SMEO, MFS]

The call processing actions for originating calls to the DSN from on-net trunks are shown in Table 4-4.

Table 4-4. Originating Call Processing Toward DSN From DSN ISTs

TABLE 4-4. ORIGINATING CALL PROCESSING TOWARD DSN FROM DSN ISTs	
Idle State	The DSN switch shall assume an idle state, on its SIG IN leads when: Open (represented by a ground through 20K ohms of resistance or greater) is present on a Type I E-lead, OR The E&SG lead loop is open (the full sensor voltage of the E-lead is present) on a Type II E-lead, OR - The M-lead is open (the full sensor voltage of the M-lead is present) on a Type V M-lead, OR - The A and B bits of the received channel on the PCM-24 DIU are a "0", OR

TABLE 4-4. ORIGINATING CALL PROCESSING TOWARD DSN FROM DSN ISTs	
	The channel 16 supervisory bits indicate on-hook for the channel on a PCM30 DIU.
Seizure by Connecting Office	The DSN switch shall recognize a call for service, or a transition to the off-hook state, on its SIG IN leads when: Ground (represented by a ground through a resistance of 150 ohms or less) is detected on a Type I E-lead, The E&SG lead loop is closed (the SG-lead will apply ground to the E-lead) on a Type II E-lead, OR Ground is detected on a Type V M-lead, OR The A and B bits of the received channel on the PCM-24 DIU are a "1", OR The channel 16 supervisory bits indicate off-hook for the channel on a PCM-30 DIU.
Reaction by DSN Switch	When ready to receive address digits, the DSN switch shall return, as an off-hook transition on its SIG OUT leads, a wink-start or delay-dial signal, depending on the requirements of the connecting office.
Outpulsing of the Called Number by the Connecting DSN Switch	The distant office outpulses in the MF or DTMF mode. The address information required to complete the call shall be in accordance with the outpulsing formats found in tables 4-9 and 4-l 0.
Call Completion by DSN Switch	The DSN switching entity shall complete, or block, the call based on translation of the called number. If the call is blocked or reaches a busy station not preemptable by the calling station, the DSN switch shall return the proper tone or announcement via its VF OUT leads. On-hook supervision shall remain on the DSN switch SIG OUT leads. If the desired station is idle, the DSN switch shall return ROUTINE or PRECEDENCE ringback tone on its VF OUT leads. When the called station answers, answer supervision shall be returned as an off-hook transition on the DSN switch SIG OUT leads.
Preemption by Connecting Office (Unanswered Call)	Preemption by the connecting office on an unanswered call shall appear as a 328 to 362 ms on-hook transition, followed by off-hook supervision and another origination by the connecting office if the trunk is reused.

TABLE 4-4. ORIGINATING CALL PROCESSING TOWARD DSN FROM DSN ISTs	
Preemption for Reuse by DSN Switch (Unanswered Call)	The DSN switch shall preempt for reuse an unanswered incoming call from the connecting office by returning on its SIG OUT leads: An off-hook transition of 95 to 105 ms, AND Followed by an on-hook transition of 340 to 350 ms, AND Followed by off-hook supervision.
Preemption Not for Reuse by DSN Switch (Unanswered Call)	The DSN switch expects the connecting office to make a transition to the on-hook state, followed by a wink-start or delay-dial signal when it is ready to accept the preempting call. Call processing from this point is the same as that described for "TERMINATING CALL PROCESSING FROM DSN". If a preemption is required on an unanswered incoming call from the connecting office, and the trunk shall not be reused, the DSN switch shall return on its SIG OUT leads: An off-hook transition of 95 to 105 ms, AND Followed by an on-hook transition of 340 to 350 ms, AND Followed by an off-hook transition of 95 to 105 ms, AND Followed by on-hook supervision The DSN switch expects the connecting office to make a transition to the on-hook state.
Preemption for Reuse by the Connecting Office (Answered Call)	The connecting office may preempt for reuse an answered call. The DSN switch shall detect a preemption of this type when: A 328 to 362 ms on-hook transition is detected on its SIG IN leads, AND Followed by off-hook supervision,
Preemption Not for Reuse by the Connecting Office (Answered Call)	The connecting office may preempt not for reuse an answered call. The DSN switch shall detect a preemption of this type when: A 328 to 362 ms on-hook transition is detected on its SIG IN leads, AND Followed by a 95 to 105 ms off-hook transition, AND Followed by on-hook supervision. The DSN switch shall react by preempting "not for reuse" the associated access line or trunk involved in the call, and returning on-hook supervision toward the connecting office.

TABLE 4-4. ORIGINATING CALL PROCESSING TOWARD DSN FROM DSN ISTs	
Preemption for Reuse by the DSN Switch (Answered Call)	The DSN switch shall initiate a preemption of this type by: - Returning an on-hook transition of 340 to 350 ms toward the connecting office on the DSN switch SIG OUT leads, AND The DSN switch expects the connecting office to make a transition to the on-hook state, followed by a wink-start or delay-dial signal when it is ready to accept the preempting call. Call processing from this point is the same as that described for "TERMINATING CALL PROCESSING FROM DSN".
Preemption Not for Reuse by the DSN Switch (Answered Call)	If a preemption is required on an answered call from the connecting office, and the trunk shall not be reused, the DSN switch shall return on its SIG OUT leads: An on-hook transition of 340 to 350 ms, AND Followed by an off-hook transition of 95 to 105 ms, AND The DSN switch expects the connecting office to make a transition to on-hook supervision.
Disconnect (Unanswered Call)	The DSN switch shall disconnect unanswered calls, and preemptions not for reuse on unanswered calls, if an on-hook transition exceeding 362 ms is received on the DSN switch SIG IN leads.
Disconnect (Answered Call)	The DSN switch shall provide calling party hold and timed disconnect. On-hook transitions exceeding 362 ms from the connecting office shall be considered a disconnect even though the called station is still off-hook. Calling party release shall prevail, and the DSN switch shall return on-hook supervision toward the connecting office.
	On-hook transitions from the called station exceeding 362 ms shall cause timed disconnect timing to commence. If the on-hook transition is less than 15 seconds, followed by off-hook supervision, conversation shall continue. If the on-hook transition exceeds 15 seconds, disconnect is assumed and the DSN switch shall commence permanent signal treatment on the incoming trunk from the connecting office.
Guard Interval	The DSN switch expects the connecting office to invoke a guard timing interval to allow sufficient time to release the call. For a trunk using terrestrial facilities, this guard interval must be 600 to 800 ms with a nominal value of 750 ms. For a trunk using satellite facilities, this guard interval must be 1050 to 1250 ms.

4.4.2 Terminating Call Processing

[Required: TS, EOS, SMEO, MFS]

The call processing actions for terminating calls from the DSN to on-net trunks are shown in Table 4-5.

Table 4-5. Terminating Call Processing From DSN TO DSN ISTs

TABLE 4-5. TERMINATING CALL PROCESSING FROM DSN TO DSN ISTs	
Idle State	The DSN switch shall present an idle state on its SIG OUT leads when: Ground (the voltage between the M-lead and ground shall not exceed 1 volt) is sent on a Type I M-lead, OR The M&SB lead loop is open (the full sensor voltage of the M-lead shall be present) on a Type II M-lead, OR The E-lead is open (the full sensor voltage of the E-lead shall be present) on a Type V E-lead, OR The A and B bits of the transmitted channel on the PCM-24 DIU are a "0", OR The channel 16 supervisory bits indicate on-hook for the channel on a PCM-30 DIU.
Seizure by the DSN Switch	The DSN switch shall initiate a call for service on its SIG OUT leads as an off-hook transition indicated by: Battery (in the range of -42.5 to -52.5 volts) is sent on the M-lead. The potential of the M-lead shall not drop more than 2.5 volts under a 500 milliampere load on a Type I M-lead, OR Closing the M&SB lead loop (the SB-lead shall apply battery to the M-lead) on a Type II M-lead, OR Ground is sent on a Type V E-lead, OR Setting the A and B bits of the transmitted channel on the PCM-24 DIU to a "1", OR Changing the supervisory bits on channel 16 to indicate off-hook supervision for the channel on a PCM-30 DIU.
Reaction by the Connecting Office	The DSN switch expects the connecting office, when ready to receive address digits, to return a delay-dial or wink-start signal as an off-hook transition detected by the DSN switch on its SIG IN leads.
Glare Resolution	Simultaneous seizure by the DSN switch and the connecting office results in a condition called “glare.” The DSN switch shall resolve a glare condition depending on whether the trunk is wink-start or delay-dial, and whether it is to hold or release, when glare is detected, reselect once in the circuit same trunk group. If no circuits are idle or preemptable, the DSN switch shall route advance. If a circuit is idle or preemptable and the failure occurs on the retrial, the DSN switch shall route advance.

TABLE 4-5. TERMINATING CALL PROCESSING FROM DSN TO DSN ISTs	
ult Detection and Retrial	The DSN switch shall detect fault conditions when terminating calls to the connecting office and react by reselecting another trunk.
Outpulsing of the Called Number by DSN Switch	The DSN switch outpulses in the MF or DTMF mode. The address information required to complete the call shall be in accordance with the outpulsing formats found in tables 4-9 and 4-10.
Call Completion by the Connecting Office	The connecting switching entity must complete, or block, the call based on translation of the called number. If the call is blocked or reaches a busy station not preemptable by the calling station, the connecting office must return the proper tone or announcement to the DSN switch VF IN leads. On-hook supervision must remain on the DSN switch SIG IN leads. If the desired station is idle, the connecting office must return ROUTINE or PRECEDENCE ringback tone to the DSN switch VF IN leads. When the called station answers, answer supervision must be returned as an off-hook transition on the DSN switch SIG IN leads.
Preemption by the DSN Switch (Unanswered Call)	Preemption by the DSN switch on an unanswered call shall appear as a 340 to 350 ms on-hook transition, followed by off-hook supervision and another origination by the DSN switch if the trunk is reused.
Preemption for Reuse by the Connecting Office (Unanswered Call)	The connecting office may preempt for reuse an unanswered outgoing call from the DSN switch by returning on the DSN switch SIG IN leads: An off-hook transition of 95 to 105 ms, AND Followed by an on-hook transition of 328 to 362 ms, AND Followed by off-hook supervision The DSN switch shall make a transition to the on-hook state, followed by a wink-start or delay-dial signal when it is ready to accept the preempting call. Call processing from this point is the same as that described for "ORIGINATING CALL PROCESSING TOWARD DSN".
Preemption Not for Reuse by the Connecting Office (Unanswered Call)	If a preemption is required by the connecting office on an unanswered outgoing call from the DSN switch, and the trunk shall not be reused, the connecting office must return on the DSN switch SIG IN leads: An off-hook transition of 95-105 ms, AND Followed by an on-hook transition of 328 to 362 ms, AND Followed by an off-hook transition of 95 to 105 ms, AND Followed by on-hook supervision The DSN switch shall make a transition to the on-hook state.

TABLE 4-5. TERMINATING CALL PROCESSING FROM DSN TO DSN ISTs	
Preemption for Reuse by the Connecting Office (Answered Call)	The connecting office may preempt for reuse an answered call. The DSN switch shall detect a preemption of this type when: A 328 to 362 ms on-hook transition is detected on its SIG IN leads, AND Followed by off-hook supervision. The DSN switch shall react by preempting "not for reuse" the associated access or trunk involved in the call. The DSN switch shall make an on-hook transition toward the connecting office, followed by a wink-start or delay-dial signal when it is conditioned to receive digits. Call processing from this point is the same as described for "ORIGINATING CALL PROCESSING TOWARD DSN".
Preemption Not for Reuse by the Connecting Office (Answered Call)	The connecting office may preempt not for reuse an answered call. The DSN switch shall detect a preemption of this type when: A 328 to 362 ms on-hook transition is detected on its SIG IN leads, AND Followed by a 95 to 105 ms off-hook transition, AND Followed by on-hook supervision. The DSN switch shall react by preempting "not for reuse" the associated access line or trunk involved in the call, and returning on-hook supervision toward the connecting office.
Preemption for Reuse by the DSN Switch (Answered Call)	The DSN switch may preempt for reuse an answered call. The DSN switch shall initiate a preemption of this type by: Returning an on-hook transition of 340 to 350 ms toward the connecting office on the DSN switch SIG OUT leads, AND Followed by off-hook supervision. The DSN switch expects the connecting office to make a transition to the on-hook state, followed by a wink- start or delay-dial signal when it is ready to accept the preempting call. Call processing from this point is the same as previously described.
Preemption Not for Reuse by the DSN Switch (Answered Call)	If a preemption is required on an answered call to the connecting office, and the trunk shall not be reused, the DSN switch shall return on its SIG OUT leads: An on-hook transition of 340 to 350 ms, AND Followed by an off-hook transition of 95 to 105 ms, AND Followed by on-hook supervision. The DSN switch expects the connecting office to make a transition to on-hook supervision.
Disconnect (Unanswered Call)	Unanswered calls, and preemptions not for reuse or unanswered calls, shall be disconnected by DSN switch with an on-hook transition on the DSN switch SIG OUT leads.

TABLE 4-5. TERMINATING CALL PROCESSING FROM DSN TO DSN ISTs	
sconnect (Answered Call)	The DSN switch shall provide calling party release and timed disconnect. ▪ On-hook transitions exceeding 362 ms from the DSN switch must be considered a disconnect by the connecting office even though the called station is still off-hook. Calling party release shall prevail and the connecting office must return on-hook supervision toward the DSN switch. ▪ On-hook transitions from the called station exceeding 362 ms shall cause timed disconnect timing to commence. If the on-hook transition is less than 15 seconds, followed by off-hook supervision, conversation shall continue. If the on-hook transition exceeds 15 seconds, disconnect is assumed and the DSN switch shall return on-hook supervision towards the connecting office on the DSN switch SIG OUT leads.
Guard Interval	The DSN switch shall invoke a guard-timing interval to allow sufficient time for the connecting office to release the call. ▪ For terrestrial facilities the guard interval shall be 600-800 ms (nominal value of 750 ms). For a trunk using satellite facilities, this guard interval shall be 1050 to 1250 ms.

4.5 Code Interpretation

4.5.1 Defense Switched Network World Wide Numbering and Dialing Plan

4.5.1.1 DSN User Dialing.

[Required: TS, EOS, SMEO, MFS, PBX1] The switch shall operate with the dialing format illustrated in Table 4-6, DSN User Dialing Format. The parts shown in parentheses ( ) are not dialed by the DSN user on all calls.

Table 4-6. DSN User Dialing Format

Access Digit	Precedence or Service Digit	Route Code	Area Code	Switch Code	Line Number
(N)	(P or S)	(IX)	(KXX)	KXX	x x x x

Where:

P is any precedence digit 0 - 4 and will be used on rotary-dial or 12-button DTMF keysets.

S is the service digit 5 - 9.

N is any digit 2 - 9.

X is any digit 0 - 9.

K is any digit 2 – 8.

NOTE: (1) Digits shown in parentheses are not dialed by the DSN user on all calls

(2) The Access Digit plus the Precedence or Service Digit constitute the Access Code

4.5.1.2 Interswitch and Intraswitch Dialing.

[Required: TS, EOS, SMEO, MFS, PBX1 - Conditional: PBX2] Seven-digit intraswitch dialing options as well as 7-and lo-digit interswitch dialing shall be supported by DSN Switches.

4.5.1.2.1 Seven-Digit Dialing.

[Required: TS, EOS, SMEO, MFS, PBX1] Seven-digit dialing shall consist of using the seven digits of the switch code and line number to establish either inter- or intra-switch calls within the same numbering plan area. Number assignments for this plan shall be of the form KXX-XXXX, where X is any digit O-9 and K is any digit 2 – 8. The specific KXX of each switch will be assigned by DISA to preclude conflicts with other switch codes. Access to the local attendant shall be obtained by dialing 0. DSN ROUTINE 7-digit inter- or intra-switch calls are initiated by dialing the appropriate sequence of (1 X) KXX-XXXX or 94 (1 X) KXX-XXXX. DSN calls above ROUTINE precedence are initiated by the appropriate sequence of 9P (1X) KXX-XXXX where P is the precedence digit (0, 1, 2, or 3). Access to other Government and/or commercial services is obtained by dialing 9 followed by the appropriate service digit(s).

4.5.1.2.2 Ten-Digit Dialing.

[Required: TS, EOS, SMEO, MFS, PBX1] Ten-digit dialing shall consist of using 10 digits comprising the area code, switch code, and line number to establish inter-switch calls where the number plan area of the calling party is different from the number plan area of the called party.

Number assignments for this plan shall be of the form KXX-KXX-XXXX, where K is any digit 2-8, and X is any digit O-9. DSN ROUTINE IO-digit inter-switch calls are initiated by dialing the appropriate sequence of (1X) KXX-KXX-XXXX or 94 (1 X) KXX-KXX-XXXX. DSN calls above ROUTINE precedence are initiated by the appropriate sequence of 9P (1X) KXX- KXX-XXXX where P is the precedence digit (0, 1, 2, or 3). Access to other Government and/or commercial services is obtained by dialing 9 followed by the appropriate service digit(s).

4.5.1.3 Access Code.

[Required: TS, EOS, SMEO, MFS, PBX1] The access code shall include the access digit, followed by the precedence digit or the service digit.

4.5.1.3.1 Access Digit

[Required: TS, EOS, SMEO, MFS, PBX1] The access digit (e.g., 9) shall provide the indication to the switch that the digits that follow will indicate either DSN call precedence, selected egress to the services of other systems or networks, or selected access to special DSN features, such as individual trunk tests.

4.5.1.3.2 Precedence Digit

[Required: TS, EOS, SMEO, MFS, PBX1] The precedence digit (0, 1, 2, 3, or 4) shall permit a DSN user to dial an authorized DSN precedence level from properly classmarked 12-button telephone instruments. When the 7-digit intraswitch dialing option is used, it is not necessary to dial or key the precedence access digit for ROUTINE calls. The assignment of precedence digits is shown in Table 4-9.

4.5.1.3.3 Service Digits

[Required: TS, EOS, SMEO, MFS, PBX1] The service digits, 5 through 9, shall provide information to the switch to connect calls to Government or public telephone services or networks that are not part of the DSN. The DSN switch will normally collect the access code and all routing and address digits before attempting to route a call to prevent numbering ambiguities between the access codes and the 2-digit abbreviated dial codes. The assignment of service access codes is shown in Table 4-7.

Table 4-7. Precedence And Service Access Codes

1. Assignments for rotary dial, 12-button telephone keysets are:

Access Digit	Precedence Digit	
e.g., 9	0	DSN - FLASH OVERRIDE Precedence
e.g., 9	1	DSN - FLASH Precedence
e.g., 9	2	DSN - IMMEDIATE Precedence
e.g., 9	3	DSN - PRIORITY Precedence
e.g., 9	4	DSN - ROUTINE Precedence

2. Assignments for 15/16 Button Keysets are:

FO	DSN - FLASH OVERRIDE Precedence
F	DSN - FLASH Precedence
I	DSN - IMMEDIATE Precedence
P	DSN - PRIORITY Precedence
(94)	DSN - ROUTINE Precedence

3. Assignments for Service Access Codes are:

Access Digit	Service Digit	
e.g., 9	5	Off-net 700 Services
e.g., 9	6	Not Assigned
e.g., 9	7	DSN CONUS FTS
e.g., 9	8	Not Assigned
e.g., 9	9	Local Public Telephone Network (PTN)

Change 1 Oct 29, 2004

4.5.1.4 Route Code

[Required: TS, EOS, SMEO, MFS, PBX1] The route code is a special purpose DSN code that permits the customer to inform the switch of special routing or termination requirements. At the present time, the route code is used to determine whether a call will use circuit switched data or voice-grade trunking. It may be used to disable echo suppressers and cancelers, and override satellite link control. It is not necessary to dial a route code for voice calls if no special features are required. The first digit of the route code is a necessary part of the dialing plan to inform the switch that the next digit, the route digit, gives network instructions for specialized routing. The route code assignments are as shown in Table 4-8.

Table 4-8. Route Code Assignment

Route Code	Route Code Use
10	Voice Call (default)
11	Circuit Switched Data
12	Satellite Avoidance (NA for CAS and Conditional for CCS)
13	Reserved
14	Reserved
*5	Hotline (off-hook) voice grade (switch inserted)
*6	Hotline (off-hook) data grade (switch inserted)
17	Reserved
18	Reserved
19	Reserved

* The user does not dial these route codes. The switch shall automatically dial hotline calls when an off-hook condition occurs and out pulse the appropriate route digit (i.e. 5 or 6).

4.5.1.5 Area Code

[Required: TS, EOS, SMEO, MFS, PBX1] The area code indicates the geographical part of the world or tactical unit (numbering plan area) in which a DSN user is assigned. It is a 3-digit code of the form KXX assigned by DISA and is used only when addressing a user outside of the originator's own numbering plan area.

4.5.1.6 Switch Code

[Required: TS, EOS, SMEO, MFS, PBX1] The switch code indicates the location of a switching center within a numbering plan area. It is a 3-digit code (see table 4-9) in the form KXX assigned by DISA. This code must be dialed to address another switch in the same numbering plan area.

4.5.1.7 Line Number

[Required: TS, EOS, SMEO, MFS, PBX1] The line number is the switch unique DSN user station identification. It is of the form XXXX. The line number groups cannot be assigned arbitrarily for each switch. The line number group assignments must be coordinated with the local connecting DSN or the host nation Public Telephone and Telegraph (PTT) and with DISA.

4.5.1.8 Emergency Service 911 Conflict Resolution

[Required: MFS, EOS, SMEO, PBX1] To prevent conflicts between 911 (emergency service) and 9 1 - 11 -(KXX)-KXX-XXXX (Flash data call), the switch shall be programmed in such a manner that after 911 is dialed and no other digits are received within 4 seconds (or after a # is dialed), the call will be treated as an emergency service call (911) and immediately processed. If additional digits are received within the 4-second time period, the call will be treated as a non-emergency call and handled appropriately.

4.5.2 DSN Switch Outpulsing Digit Formats

The switch outpulsing digit format for Multi-Frequency R1 (MF R1) and Dual Tone Multi-Frequency (DTMF) Signaling shall be as shown in tables **4-9 [Required: TS, EOS, MFS - Conditional: SMEO, PBX1]** and 4-l **0 [Required: TS, EOS, MFS, SMEO -- Conditional: PBX1]** .

Table 4-9. DSN Switch MFR1 Outpulsing Digit Format

	Precedence Digit	Route Digit	Route Control Digit	Area Code	Switch Code	Line Number	
[KP]	P	X	(Y)	(KXX)	Kxx	XxXx	[S/T]

[Required: TS, EOS, MFS - Conditional: SMEO, PBX1]

Where: P is any digit 0 – 4

X is any digit 0 9

Y is the digit 0 – 3 (Required only for TS and MFS switches) See Note

K is any digit 2 8

KP is the key pulse tone for MF(R1) 2/6 signaling inserted by the switch

S/T is the end of signaling tone for MF(R1) 2/6 signaling inserted by the switch

Note: These switches shall have the option to send or receive a call with or without the route control digit. Digits shown in parenthesis () are not present on all calls.

Table 4-10. DSN Switch DTMF Outpulsing Digit Format

Precedence Digit	Route Digit	Area Code	Switch Code	Line Number
(P)	(X)	(KXX)	KXX	XXXX

[Required: TS, EOS, MFS, SMEO – Conditional: PBX1]

Where: P is any digit 0 - 4 (standard DTMF digit format) or A, B, C, D

(Precedence DTMF digit format)

X is any digit 0 – 9

K is any digit 2 - 8

O=Flash Override, l=Flash, 2=Immediate, 3= Priority, 4= Routine

A= Flash Override, B= Flash, C= Immediate, D= Priority

Note: Digits shown in parenthesis ( ) are not present on all calls. The switch shall have the ability to send or receive a call with or without the route digit. Standard digit format only required for TS, EOS, and MFS.

Specific requirements for DTMF signaling can be found in Section 5.4.2

4.5.2.1 Route Control Digit (RCD) [Inclusive thru 4.5.2.1.9]

[Required: TS, MFS] The DSN RCD provides optimum assurance, consistent with cost, for call completion, particularly of high precedence calls. Survivability is attained by exploiting the flexibility and efficiency of traffic routing capability inherent in the design of the switching system. The following assumptions/requirements apply:

a. Distribution of switching centers is consistent with traffic density and availability of transmission facilities.

b. All DSN MFS switching centers have the same classification in the network and generally have the same operating capabilities. Each MFS switching center serves originating, terminating, and tandem traffic, exercises preemption, and provides automatic alternate routing.

c. Each DSN MFS/TS switching center is provided with inter-machine trunks from several of its most immediate surrounding centers. Direct trunk groups are established between each center and other centers to provide improved accessibility and traffic handling.

d. Use of this feature shall be an additional functionality in call processing and shall not affect the call processing and treatment of calls that are class-marked for Method 1 and/or Method 2 trunk route selection for precedence calls above ROUTINE.

e. Use of this feature shall not affect other routes or their associated attributes that are not assigned the RCD.

f. Use of this feature in the same switching center shall not restrict the use of other routes without the RCD.

g. Use of this feature shall be in accordance with the specified routing procedures for "exterior" and "interior" routing schemes as a minimum.

h. Use of this feature shall not affect automatic and manual network management controls.

4.5.2.1.1 Conceptual Backbone Network Structure.

a. DSN Backbone Theater/home Grid Pattern. The fundamental element of the DSN is a theater/home grid network of switching centers that are assigned as a common backbone surrounded and directly connected to a destination switching center as shown in Figure 4- 1. The number of switching centers in the grid varies with its geographical location and traffic distribution. The grid for any other switching center in Figure 4-1 has its own set of switching centers constituting an array that forms the basic polygrid pattern shown in Figure

4-2. The hexagonal grid pattern is similar for all switching centers except for peripherally located centers that have less than a full pattern.

b. Long Haul Pattern. After the pattern of theater/home grids has been established, a pattern of long-haul trunking is developed to minimize the number of interswitch trunks that must be connected in tandem to complete long-distance calls. These trunk groups are established when there is sufficient calling between switching center pairs to economically justify a direct path.

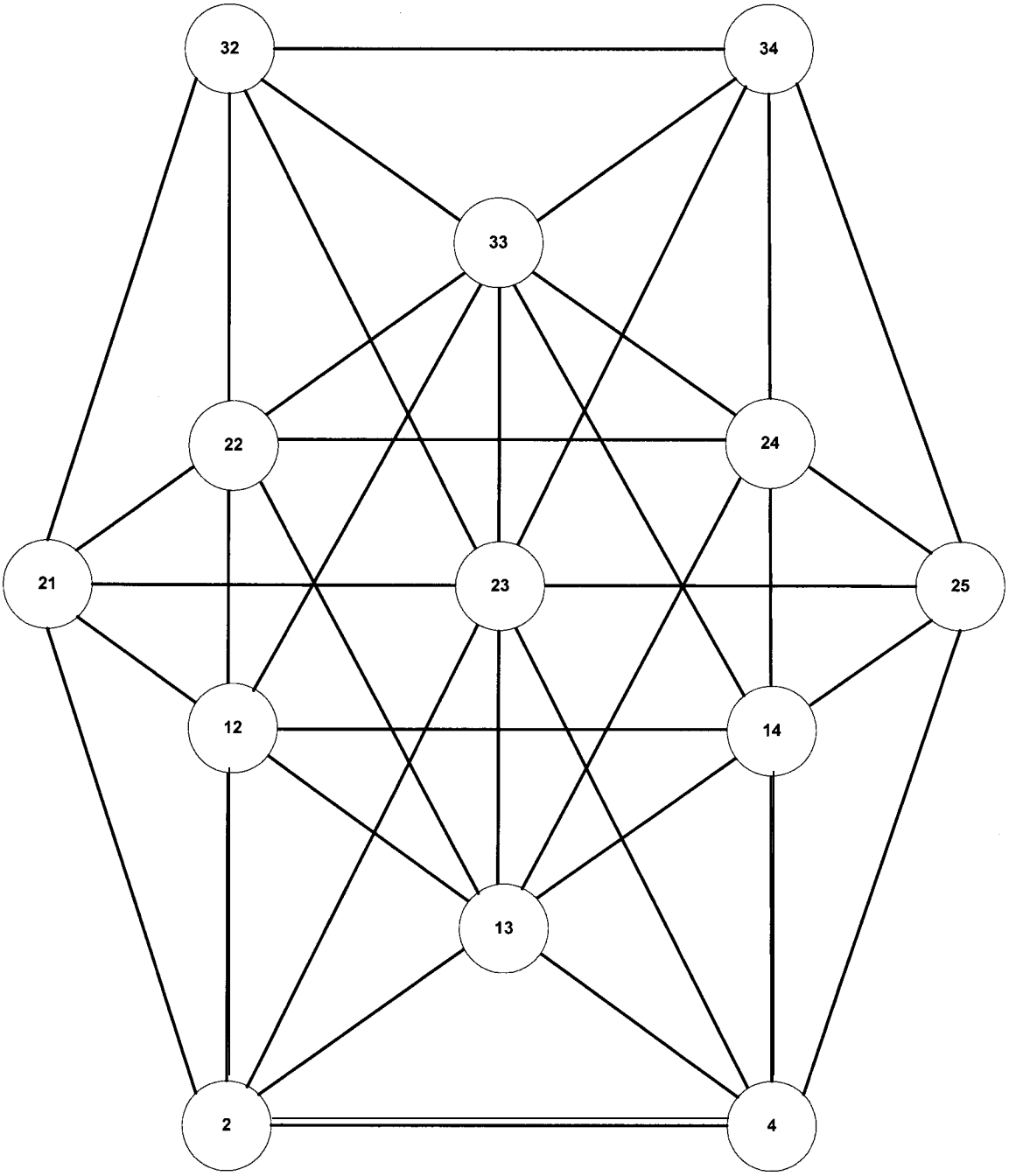

Figure 4-1. Theater/Home Grid Array

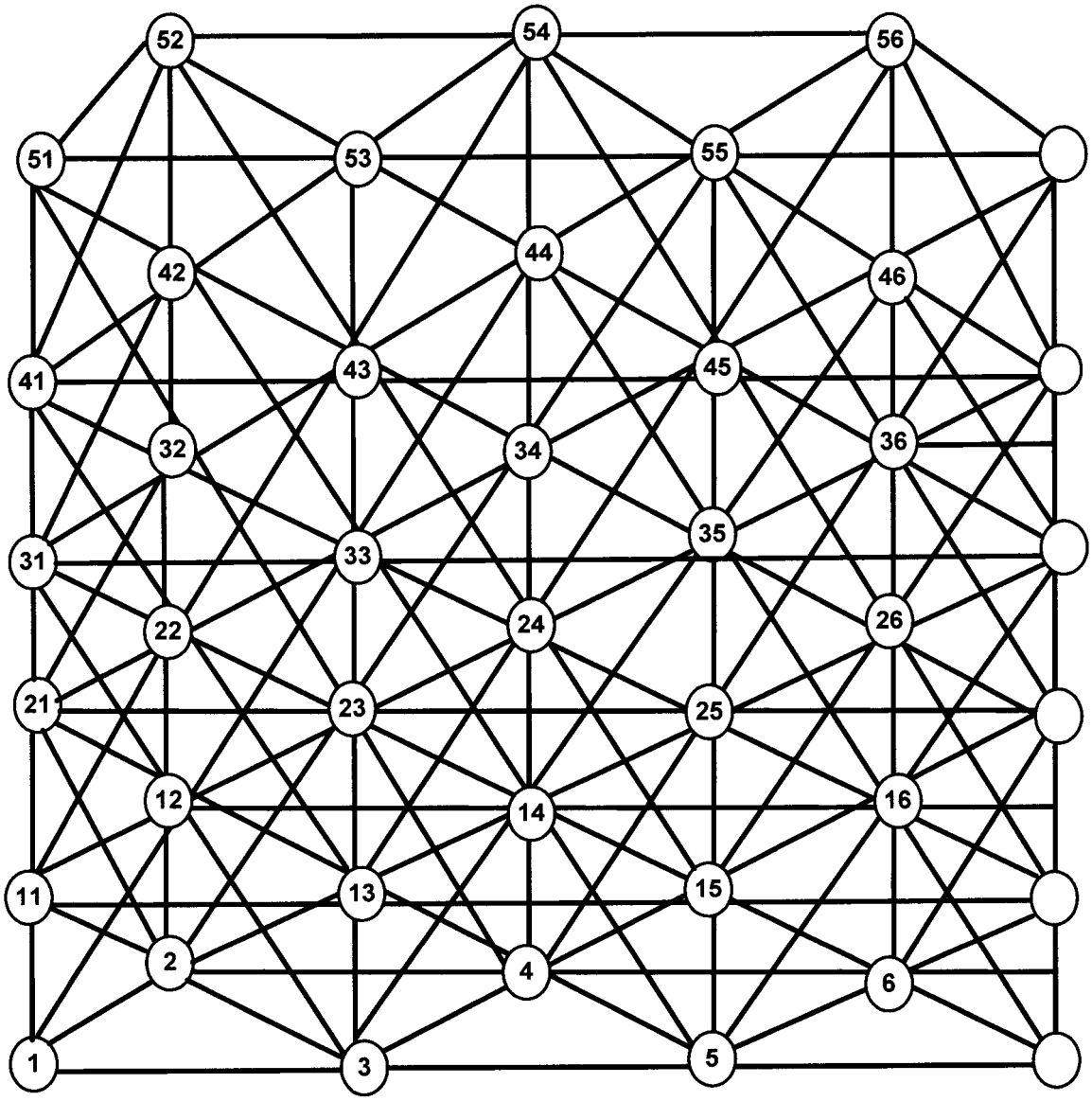

Figure 4-2. Basic Polygrid Pattern

c. Alternate Routing. The network is sufficiently balanced to enable any section of it to take on alternately routed traffic loads occasioned either by an unusual concentration of activity in suddenly created communications focal points or by sudden loss of facilities or switching centers. The alternate routing capabilities of the network enable automatic skirting of interrupted or overloaded interswitch trunk groups.

4.5.2.1.2 Routing Procedures.

a. Progressive Routing. The general approach to alternate routing through the DSN Backbone is one of progressive routing. From a given originating switch to a given destination switch, all programmed route choices are examined, in turn, for the best routing to the destination, the next best, and so on until an available link is selected for transmission of the call. The selected switch then becomes the originating switch, and then the selection process begins again. Thus a switch loses control of the routing after it passes call control to the next switch. This is the basic structure for Method 1 and Method 2 trunk route selection for calls above ROUTINE as described in Paragraph 3.2.3.1 and its subparagraphs. When the route control digit is employed for routing the rules for selecting available alternate routes change as described below and in the following subparagraphs.

b. Exterior and Interior Routing. There are two distinct forms of routing using the route control digit, which are based on the relationships of the originating switch and the theater/home grid configuration of the destination. If the originating switch is not in the theater/home grid of the destination switch, it is called "exterior" routing. If it is in the theater/home grid of the destination switch, it is called "interior" routing.

(1) If the originating switch is exterior to the destination theater/home grid, the routing plan consists of a maximum of ten possible route choices: a direct route and three alternate route triples. Alternate triples are defined as groups of up to three routes each arranged in order of preferability. The alternate triples are defined in order as the first triple (1st T), second triple (2nd T), and third triple (3rd T). In some cases, these triples may be reduced to partial triples of one or two routes due to the paucity of acceptable route choices.

(2) If the originating switch is in the theater/home grid of the destination switch, a maximum of seven possible route choices exists: a direct route followed by two triples. The two triples are designated the (1st T) and (2nd T).

4.5.2.1.3 Route Control Principles.

It is necessary to make a distinction between forward and lateral routing in establishing the principles of route control. Forward routing is defined as advancing a call to a switching center that is geographically nearer to the destination. Furthermore, there must be no traffic programmed for that destination in the reverse direction over the trunk group in question.

Lateral routing is defined as routing a call to a switching center so as not to advance the call geographically as in forward routing. There may be traffic for the same destination programmed in the reverse direction of the trunk group in question. Lateral routing has to be distinguished from forward routing for the same destination to prevent "shuttle" (call routing back and forth between switching centers) and no "ring-around-the-rosie" (call returning to a switching center via another switching center.

It is necessary, also, to establish a rule that a call arriving at a theater/home grid does not leave the theater/home grid in further routing. From this rule it can be seen that a call which enters a theater/home grid from a switching center exterior to the theater/home grid has employed forward routing and will not be programmed with reverse traffic.

4.5.2.1.4 Route Control Digit.

Route Control in the DSN Backbone network depends on the use of the route control digit (RCD). The RCD is an integer, within the assigned numbering plan, which immediately precedes the address digits transmitted using CAS and/or DSN7 CCS signaling over interswitch trunks (CAS = P X Y KXX KXX XXXX; DSN7 CCS = X Y KXX KXX XXXX). The RCD has the following functions:

a. To exercise control over alternate routing at the switching center.

b. To prevent "call shuttling" and "ring-around-the-rosie."

c. To assist in limiting the number of interswitch trunk links that may be used on a call.

4.5.2.1.5 Route Control Digit Rules.

a. Route control digit "0" is always used on local originating when the backbone is entered over trunks that support the route control digit.

b. Route control digit "0" is always used on forward routes (no reverse traffic programmed for the code group).

c. Route control digit "1", "2", or "3" must be used on lateral routes (reverse traffic may be programmed on these routes.)

d. Route control digit "1" "2 or "3" is used on the first lateral route; route control digit "3" is used on the second or only lateral route.

e. The direct route is always a forward route.

f. The first alternate can be a forward or lateral route.

g. The route control digit logic is shown in table 4-l 1.

Table 4-11. Route Control digit Logic

RCD Received	RCD Transmitted If Selected Route Is	
	Forward	Lateral
0	0	1,2,or 3
1	0	3
2	0	3
3	0	3 (Normally NA)

h. The search algorithm is limited to the direct and first alternate for ROUTINE calls and for the friendly search for priority and higher calls.

i. In the preemptive search the trunks are tested one by one to determine if there are any idle trunks in the direct route. If so, an idle trunk in the direct route is selected; if not, the call of the lowest precedence is preempted, provided the precedence of the call selected for preemption is lower than the precedence of the call being processed. Failing to complete the call on the direct route, the preemptive search advances to the first triple and repeats the process previously described. If the call is still not completed, the process is repeated for each successive programmed triple. Complete failure shall result in a Blocked Precedence Announcement (BPA).

j. All precedence calls to selected destination centers shall be processed in one of two ways as described below:

(1) A precedence call failing to find an idle trunk in the direct route shall search in the first triple before entering a preemptive search.

(2) A precedence call failing to find an idle trunk in the direct route shall immediately enter the preemptive search and continue as described previously. This alternative shall be used at switching centers with dedicated 4-wire subscribers and at switching centers serving as gateways to the overseas (OCONUS) areas.

k. The outgoing route control digit will be the same for all precedence levels (ROUTINE through FLASH OVERRIDE) given the same route selected and the same route control digit received.

4.5.2.1.6 Exterior Routing Rules

The route control digit logic for exterior routing is shown in table 4-12. The rules listed above are applied to routing in routes exterior to the Theater/Home Grid as shown in Tables 4- 13, 4- 14, and 4-15 below.(Note: In the tables below the 1st alternate triple is shown as a lateral route. If the 1st alternate triple is a forward route the rules required for outpulsing RCDs on the direct route will apply)

Table 4-12. Route Control Digit Logic for Exterior Routing

ROUTINE CALLS (P4)	
RCD	Route Selected
0	Use Direct plus 1st Triple
1	Use Direct plus 1st Triple
2	Use Direct plus 1st Triple
3	Use Direct plus 1st Triple
NON ROUTINE CALLS (P0-P3)	
0	All Programmed Routes
1	Use direct route plus 1st and 2nd Triples
2	Use direct route plus 1st and 3rd Triples
3	Use direct route plus 1st Triple

Table 4-13. ROUTINE CALLS

RCD In	"Direct" Out RCD	1st Alternate Out RCD	2nd Alternate Out RCD	3rd Alternate Out RCD
0	0	1,2 or 3	N A	N A
1	0	3	NA	NA
2	0	3	NA	NA
3	0	3	N A	NA

Table 4-14. Precedence Calls Above ROUTINE – Idle Search Sequence

RCD In	"Direct" Out RCD	1st Alternate Out RCD	2nd Alternate Out RCD	3rd Alternate Out RCD
0	0	1,2,or 3	NA	NA
1	0	3	NA	N A
2	0	3	NA	NA
3	0	3	NA	NA

Table 4-15. Precedence Calls Above ROUTINE – Preemptive Search Sequence

RCD In	"Direct" Out RCD	1st Alternate Out RCD	2nd Alternate Out RCD	3rd Alternate Out RCD
0	0	1,2,or 3	3	3
1	0	3	3	NA

2	0	3	NA	3
3	0	3	NA	NA

NOTE: "NA" = Not Allowed.

4.5.2.1.7 Interior Routing Rules

The route control digit logic for interior theater/home grid routing is shown in table 4- 16. This logic is depicted in Tables 4-l 7, 4- 18, and 4- 19 below. (Note: In the tables below the 1 st alternate is shown as a lateral route not a forward route. If the 1 st alternate is a forward route the outputted RCDs required in the direct route will also apply to the 1st alternate.)

Table 4-16. Route Control Digit Logic for Interior Theater/Home Grid Routing

ROUTINE CALLS (P4)	
RCD	Route Selected
0	Use Direct plus 1st Triple
1	Use Direct only
2	Use Direct only
3	Use Direct only
NON ROUTINE CALLS (P0-P3)	
0	All Programmed Routes
1	Use direct route plus 1st Triple
2	Use direct route plus 2nd Triple
3	Use direct route only

Table 4-17. ROUTINE CALLS

RCD In	"Direct" Out RCD	1st Alternate Out RCD	2nd Alternate Out RCD	3rd Alternate Out RCD
0	0	1,2,or 3	N A	N A
1	0	NA	N A	N A
2	0	NA	N A	NA
3	0	N A	NA	N A

Table 4-18. Precedence Calls Above ROUTINE – Idle Search Sequence

RCD In	"Direct" Out RCD	1st Alternate Out RCD	2nd Alternate Out RCD	3rd Alternate Out RCD
0	0	1,2,or 3	NA	N A
1	0	N A	NA	N A
2	0	N A	NA	N A
3	0	N A	NA	NA

Table 4-19. Precedence Calls Above ROUTINE – Preemptive Search Sequence

RCD In	"Direct" Out RCD	1st Alternate Out RCD	2nd Alternate Out RCD	3rd Alternate Out RCD
0	0	1,2 or 3	3	3
1	0	3	NA	NA
2	0	NA	3	NA
3	0	3	NA	NA

NOTE: "NA" = Not Allowed.

4.5.2.1.8 Subscribers on a Multifunction Switch

Line originations on a multifunction switch (MFS) are not considered to be on the backbone network until they leave the MFS. As a result, route control digit limitations will not be applied to the calls until they leave the MFS. The following are the rules for this case:

a. When terminating to a trunk that uses the route control digit a "0" will be sent out in all cases.

b. All routes shall be searched for all precedence levels (ROUTINE through FLASH OVERRIDE).

4.5.2.1.9 Dual-Theater/Homed End Offices with Single Addresses

a. Rule for Dual Homing of End Offices. The pair of switching centers serving a dual-theater/homed end office with a single address will be directly interconnected by a trunk group. This rule is necessary for transmission purposes to limit the number of additional links required on a call and to simplify the route control program.

b. Classification of Centers Relative to a Dual-Theater/homed End Office Figure 4-3 illustrates a dual-homing arrangement for an end office with a single address. The two centers serving this end office are designated as D1 and D2. D1 and D2 are interconnected according to the rule stated above. Each of these destination centers has a theater/home grid determined by the basic network geometry and theater/home grid principles discussed earlier. Centers in the theater/home grid for D1 are designated as G1; those in the theater/home grid of D2 are designated as G2; while those that are in both theater/home grids are designated as G12. All other centers are programmed to use the routing program for one of the two destination centers, either D1 or D2. The bias of the dual-theater/homed routings of exterior centers toward one of the two destination centers results in efficient use of routing programs.

c. Routing Principles for Dual-Theater/homed PABX/PBX's

(1) Forward routing toward a dual-theater/homed end office is always used to reach any of the theater/home grid centers G1, G2, or G12. Routing from any of these three classifications of theater/home grid centers to the D1 or D2 destination center is

defined as forward routing. In both instances of forward routing route control digit "0" is sent ahead. Routing from G1 or G2 centers is conventional theater/home grid lateral routing which follows the principles discussed previously.

(2) The G12 centers employ a special theater/home grid routing pattern. The route control digit logic in G12 centers is shown in table 4-20. This logic is depicted in Tables 4-21, 4-22, and 4-23. This pattern restricts lateral routings to other G12 offices, since lateral routings to G1 and G2 centers are regarded as backward routings in the context of dual-theater/homed end office programming. The reason for this is that a call reaching a G12 center has direct trunking to both serving centers D1 and D2. In contrast to this, the G1 and G2 centers have direct trunking to only one of the two serving centers.

(3) Other backward routings not permitted are routings from G1 , G2, and G12 centers to exterior centers and routings from D1 and D2 centers to exterior centers and routings from D1 and D2 centers to G1, G2, and G12 centers. The recommended arrangement is to employ normal theater/home grid programming in centers G1 and G2 with calls to the dual-theater/homed locations being handled in these centers as though they were single theater/homed in the respective D1 or D2 destination centers. This method also conserves routing programs.

Table 4-20. Route Control Digit Logic in G12 Centers

ROUTINE CALLS (P4)	
RCD	Route Selected
0	Use direct route only
1	Use direct route only
2	Use direct route only
3	Use direct route only
NON ROUTINE CALLS (PO-P3)	
0	Use direct route plus Alternate
1	Use direct route plus Alternate
2	Use direct route plus Alternate
3	Use direct route only

Table 4-21. ROUTINE CALLS

RCD In	"Direct" Out RCD	Alternate Out RCD
0	0	N A
1	0	N A
2	0	NA
3	0	N A

Table 4-22. Precedence Calls Above ROUTINE- Idle Search Sequence

RCD In	"Direct" Out RCD	1st Alternate Out RCD
0	0	NA
1	0	NA
2	0	NA
3	0	NA

Table 4-23. Precedence Calls Above ROUTINE- Preemptive Search Sequence

RCD In	"Direct" Out RCD	Alternate Out RCD
0	0	0
1	0	0
2	0	0
3	0	NA

NOTE: "NA" = Not Allowed.

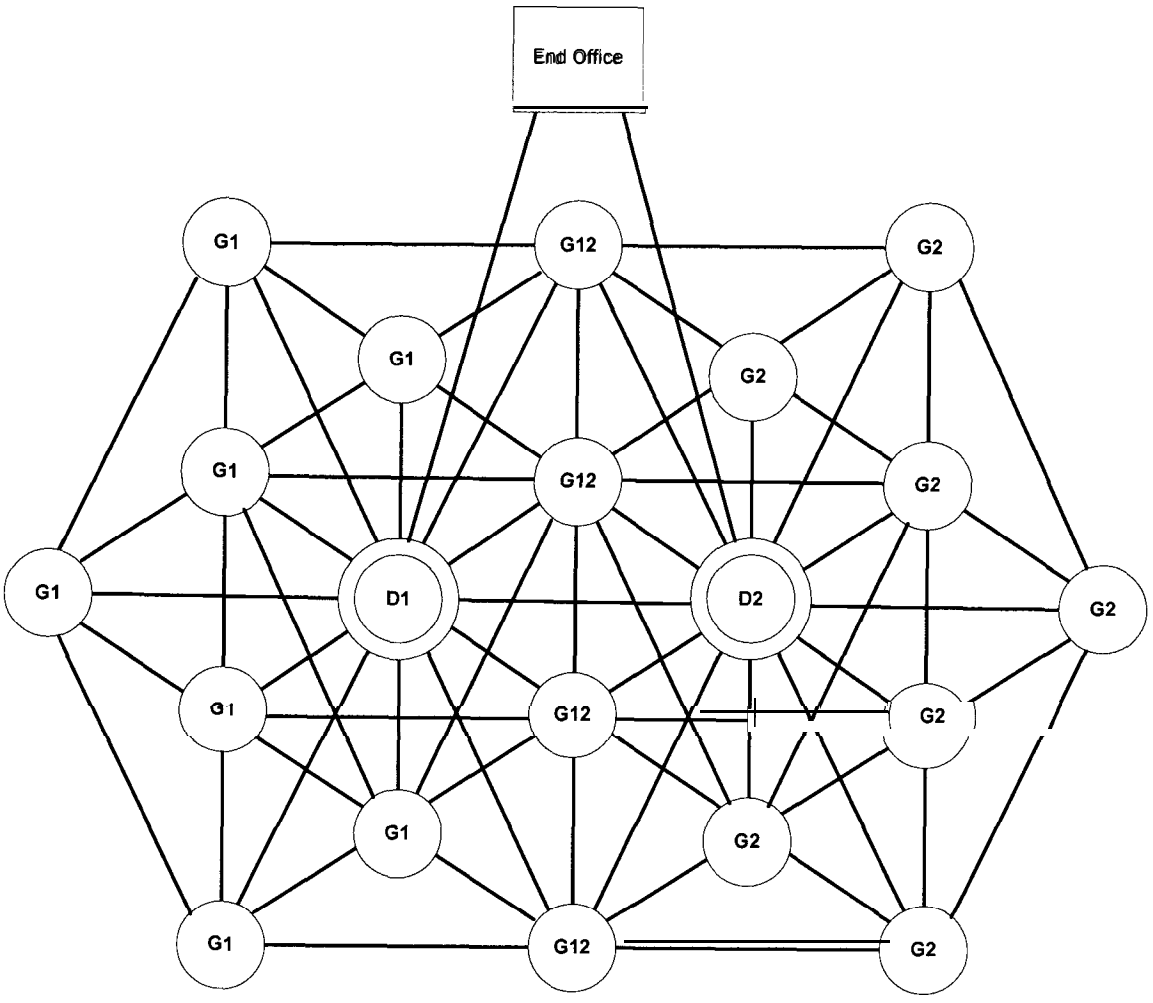

Figure 4-3. Dual-Homed End Office with Single Address Grid Array.

4.5.3 Standard Directory Numbers

[Required: MFS, EOS, SMEO, PBX1] Standard directory numbers for the services listed in Table 4-24 shall adhere to the format and assignments specified and shall allow a network call to reach that service.

Table 4-24. Standard Directory Numbers

Call Type	Number Assignment
Local Attendant Service	0
Attendant Service DSN	KXX-1110
Chief Operator	KXX-1311
Weather Announcer	KXX-1381
Time	KXX-1391
Trouble Reporting	KXX-1611
Note: X is any digit 0-9 K is any digit 2-8	

4.5.4 Standard Test Numbers

[Required: TS, EOS, MFS – Conditional: SMEO, PBX1] Standard test numbers for test and maintenance capabilities shall adhere to the format and number assignments listed in Table 4-25.

Table 4-25. Standard Test Numbers

Call Type	Number Assignment
Milliwatt Test	KXX-1021
Supervisory and Signal Test	KXX-1031
Far End Transmission and Noise Test	KXX-1041
Dial Speed Test	KXX-1351
DTMF Test	KXX-1361
Ringback Test	KXX-1371
Line Check Test	KXX-1301
Loop Around Termination	KXX-1061
Echo Canceler Test Loop around termination with 1 Odb pad inserted between receive and transmit	KXX-1062
Preemption Test	KXX-1071
Digital Loop Back Testing	KXX-1081
Bonding Mode 1 Loop	KXX-1091
Note: X is any digit 0-9 K is any digit 2-8	

4.5.5 Base Services – Abbreviated Numbers

[Required: TS, EOS, SMEO, MFS - Conditional: PBX1] The format 10X is used where conflicts between DSN route codes (1X) and base service number (1XX) exist. When 7-digit

intraswitch dialing is used, the switch shall be programmed in such a manner that after the 11X code is received, and no additional digits are received within approximately 4 seconds or after a # is dialed, the call shall be treated and processed as a base service call. If additional digits are received within the 4-second time period, the call shall be treated and processed as a DSN call.

4.5.6 Digit Reception Requirements

[Required: TS, EOS, SMEO, MFS, PBX1] Switches shall meet the digit reception requirements in Telcordia GR-505-CORE, *Call* Processing, Issue 1, December 1997, paragraph 7.2.

4.5.7 Digit Registration Capacity

[Required: TS, EOS, SMEO, MFS]

Switches shall meet the digit registration requirements in Telcordia GR-505-CORE, *Call* Processing, Issue 1, December 1997, paragraph 7.3.

4.5.8 Screening

[Required: EOS, SMEO, MFS -- Conditional: PBX1, PBX2] Before routing a call that is dialed from a user line, the system shall be capable of determining routing functions from class of service information associated with the line. DSN switches shall be capable of performing screening functions as described in Telcordia Technologies GR-505-CORE, *Call* ***Processing,*** Issue 1, December 1997, paragraph 8, requirements R8-1 and R8-2. In addition DSN switches shall be capable of performing the following screening functions.

4.5.8.1 Zone Restriction Servicing of Local Originators.

[Required: EOS, SMEO, MFS - Conditional: PBX1, PBX2] Zone restriction shall be employed in the DSN to prevent a particular originator or group of originators from completing calls to specified destinations (codes). A zone can consist of an area code, office code, or any combination of these codes. If any area, specific code, service, or location is to be denied to even one user, the denial must be accomplished by zone restriction in the originating station's switching center. Zone restriction as it applies in any one switching center is independent of the zone restriction assignments in any other switching center. There shall be up to 15 zone restriction tables.

SECTION 5 – Signaling

5.0 Introduction

This section covers the signaling requirements for DSN switching systems. The requirements are based on Telcordia Technologies Generic Requirements GR-506-CORE, Issue 1, Revision 1, November 1996, *LSSGR: Signaling for Analog Interfaces; DSN Generic Switching Center Requirements (GSCR),* September 1994 & March 1997; American National Standards Institute (ANSI) T1.619, 1992; ANSI T1.619a,1994; ANSI T1.110, 1999; ANSI T1.116, 1996; ANSI T1.116a, 1998; ANSI T1.111, 1996; ANSI T1.114, 2000; ANSI T1.112, 1996,andANSI 1.113, 1995;

Requirements for analog signaling also apply to digital circuits using channel associated signaling (CAS).

5.1 Network Power Systems for External Interfaces

[Required: TS, EOS, SMEO, MFS] DSN switching systems shall meet the network power systems requirements specified in the Telcordia Technologies GR-506-CORE, paragraph 2.1.

5.2 Line Signaling

5.2.1 Loop Start Line.

[Required: EOS, MFS, SMEO, PBX1 - Conditional: PBX2] In a loop start line arrangement, the switch supplies battery between the ring and the tip conductors. The switch detects a loop closure from the customer station as a seizure, after which it provides dial tone on the tip and ring conductors as a start dial signal.

DSN switching systems shall meet this requirement in accordance with the "R" requirements in Telcordia Technologies GR-506-CORE, *Signaling For Analog Interfaces,* Issue 1, Revision 1, Nov 1996, paragraphs 3 through 3.4.7, 6.2.1, 6.3.1, 13.6.1.1, 13.6.2.1, 13.6.3.1, and 13.7.1.

5.2.2 Ground Start Line.

[Required: EOS, MFS, SMEO, PBX1 - Conditional: PBX2] In a ground start line arrangement, the switch provides battery through a ground detector to the ring conductor and leaves the tip conductor open. The customer station or PBX seizes the line by applying a ground to the ring conductor. The switch responds by returning ground on the tip conductor and dial tone across the tip and ring as start dial signals. When the tip ground is detected from the switch, the customer station or PBX changes to loop closure for the off-hook state. Alerting the customer or PBX is done by connecting 20-Hz ringing to the ring conductor and ground to the tip conductor.

DSN switching systems shall meet this requirement in accordance with the "R" requirements in Telcordia Technologies GR-506-CORE, *Signaling For Analog Interfaces,* Issue 1, Revision 1, Nov 1996, paragraphs 4 through 4.4.8, 13.2.2, 13.6.1.1, 13.6.2.2, 13.6.3.2, and 13.7.2.

5.3 Trunk Supervisory Signaling

5.3.1 Reverse Battery (RB)

[Required: EOS, MFS, SMEO, PBX1 - Conditional: PBX2] The trunk circuit at one end of a variety of loop signaling trunks applies battery and ground through suitable resistances to the tip and ring conductors. One polarity on the tip and ring leads is used of the on-hook state, and the reverse is used for the off-hook state.

DSN switching systems shall meet this requirement in accordance with the "R" requirements in Telcordia Technologies GR-506-CORE, *Signaling For Analog Interfaces,* Issue 1, Revision 1, Nov 1996, Paragraphs 7 and 8.

5.3.2 Immediate Start

[Required: TS, EOS, MFS - Conditional: SMEO, PBX1, PBX2] Immediate start (by-link) is a feature that provides intersystem address signaling between the switch and a system that transmits and/or receives address signals without special address control signals. For the reception of digits from offices requiring immediate start, the system shall be prepared to recognize the first dial pulse promptly after the connect signal is received. For transmission of address information to an office requiring immediate start, the system shall delay outpulsing after sending the connect signal to ensure that the distant office is ready. It is desirable that the transmitting office verifies that battery and ground are of the proper polarity at the time of seizure. Failure to detect the proper condition shall result in a retry of the call and a failure recorded.

DSN switching systems shall meet this requirement in accordance with the "R" requirements in Telcordia Technologies GR-506-CORE, *Signaling For Analog Interfaces,* Issue 1, Revision 1, Nov 1996, paragraph 11.2.2.

5.3.3 Normal and Abnormal Wink Start Operation

5.3.3.1 Normal Wink Start Operation

[Required: TS, EOS, MFS, SMEO – Conditional: PBX1, PBX2] Wink start is a feature that provides control for address signaling between systems arranged with wink start as a special address control signal. The wink start signal is applicable to specified incoming, outgoing, and two-way trunks and is used to inform the calling office that the called office is prepared to receive address signals. For wink start operation, the transmitting office shall test for the detection of the brief off-hook as a signaling integrity check. DSN switching systems shall provide wink start operation in accordance with the requirements in Telcordia Technologies GR-506-CORE, *"Signaling For Analog Interfaces",* Issue 1, Revision 1, June 1996, Paragraph 11.2.1.

5.3.3.2 Glare Operation

[Required: TS, EOS, MFS, SMEO – Conditional: PBX1, PBX2] Glare occurs when both interfaces of switching systems connected to the same inter-switching-system facility (trunk) apply

a seizure signal at approximately the same time. DSN switching systems shall provide glare detection and resolution in accordance with the requirements in Telecordia Technologies GR-506-*CORE, "Signaling For Analog Interfaces",* Issue 1, Revision 1, June 1996, Paragraph 11.5.

5.3.3.3 Abnormal Operation

5.3.3.3.1 Wink Start

[Required: TS, EOS, MFS, SMEO – Conditional: PBX1, PBX2] After the connect signal is sent over the trunk, the originating office can normally expect to receive a wink start (timed off-hook) signal indicating that the terminating office is ready to receive address signaling. When the end of the wink start signal is received, the originating office may begin outpulsing. The duration of the off-hook wink returned by the terminating office will be 140 to 290 ms. However, because of distortion in the trunk facilities, the duration of the wink received by the originating office may vary (refer to figure 3-2). If the wink is shorter than the minimum allowable interval, it shall be ignored. If it is greater than the maximum interval, the call shall be considered to be in a glare condition as described in paragraph 5.3.3.3.2.

5.3.3.3.2 Glare Resolution

[Required: TS, EOS, MFS, SMEO - Conditional: PBX1, PBX2] DSN switches shall meet the glare resolutions requirements defined in Telcordia Technologies GR-506-CORE, *Signaling For Analog Interfaces,* Issue 1, Revision 1, Nov 1996, paragraph 11.5 and subparagraphs.

5.3.4 Delay Dial

[Conditional: EOS, MFS, SMEO, PBX1, PBX2] If this feature is provided, it shall be in accordance with Telcordia Technologies GR-506-CORE, *Signaling For Analog Interfaces,* Issue 1, Revision 1, Nov 1996.

5.3.5 Call for Service Timing

[Required: TS, EOS, MFS, SMEO, PBX1 – Conditional: PBX2] The switching system shall ignore as a "hit" any transient off-hook signal whose duration is less than 35 milliseconds (MS) on an incoming trunk. Off-hook signals greater than 60 milliseconds shall be considered as a valid seizure. Signals that are 15 to 60 milliseconds in length are considered invalid seizures.

5.3.6 Guard Timing

[Required: TS, EOS, MFS, SMEO, PBX1 – Conditional: PBX2] DSN switching systems shall meet guard requirements in accordance with Telcordia Technologies GR-506-CORE, *Signaling For Analog Interfaces,* Issue 1, Revision 1, Nov 1996.

5.3.7 Satellite Interface

[Required: TS, EOS, MFS, SMEO – Conditional: PBX1, PBX2] The DSN switching system shall accommodate the use of single satellite-derived trunk facilities. The only interface parameter

that must be modified is the guard timing. This interval shall be extended from 1050 to 1250 milliseconds to compensate for propagation delay.

5.3.8 Disconnect Control

[Required: TS, EOS, SMEO, MFS – Conditional: PBX1, PBX2] DSN switching systems shall meet the Disconnect Control requirements in Telcordia Technologies GR-506-CORE, *Signaling For Analog Interfaces,* Issue 1, Revision 1, Nov 1996, paragraph 13 and all subparagraphs.

5.3.9 Reselect or Retrial

[Required: TS, EOS, MFS, SMEO – Conditional: PBX1, PBX2] The actions that shall be taken by the switch are summarized below based on the direction of the circuit (outgoing or two-way), the method of controlled outpulsing (wink start or delay dial), and the method of glare resolution on two-way circuit (hold or release). The switch shall reselect or retry on circuit supervision faults as follows:

Table 5-1. Reselect or Retrial

Fault	Recommended Operation
1. Glare detected to glare release	Release once in same trunk group. If glare again detected or the group is all trunk busy (ATB), route advance.
2. Sender timeout on glare hold	Reselect once in the circuit same trunk group. If no circuits are idle or preemptable, route advance. If a circuit is idle or preemptable and the failure occurs on the retrial, route advance.
3. Sender timeout occurs, on an outgoing delay dial circuit.	Same as "2."
4. Integrity check failure on a delay dial circuit.	Reselect once in the same group. If fault is detected or if route is ATB, route advance.
5. No wink received on a wink start circuit	Same as "2."
6. Wink exceeds 350 ms on an outgoing wink start circuit.	Same as "2."
7. Unexpected stop on an MF circuit.	Same as "2."

5.3.10 Off-Hook Supervision Transitions (Unexpected Stop)

[Required: EOS, MFS, SMEO – Conditional: PBX1, PBX2] DSN switches shall detect and react to unexpected off-hook supervisory transitions while outpulsing on trunks, after receipt of the start-dial indication and until completion of the outpulsing. An unexpected stop is defined as an

off-hook supervision transition whose duration exceeds the "hit" timing interval. When an unexpected stop is detected, the system shall reselect another trunk.

5.4 Control Signaling

Control signaling is used for the reception and outpulsing of address, precedence, and routing information. There are 3 types of outpulsing: Dial-Pulse, Dual Tone Multifrequency (DTMF), and multifrequency 2/6. The switch shall support as applicable the following signaling combinations: DTMF 2way, DP 2way, DTMF in-DP out, DP in-DTMF out, MFR1 2/6 2way. Audible tones shall be in accordance with Telcordia Technologies GR-506-CORE, Signaling for Analog Interfaces, Issue 1, June 1996, Paragraph 17.

5.4.1 Dial-Pulse (DP) Signals

[Required: TS, EOS, SMEO, MFS - Conditional: PBX1, PBX2] DSN DP signaling requirements are the same as those specified in Telcordia Technologies *Signaling for Analog Interfaces,* GR-506-CORE, Issue 1 June 1996, paragraph 10.

5.4.2 Dual Tone Multi-Frequencv (DTMF) Signaling

[Required: TS, EOS, SMEO, MFS – Conditional: PBX1, PBX2]

The DSN switching system shall be capable of outpulsing and interpretation of DTMF digits on outgoing or two-way trunks as specified in Telcordia Technologies *Signaling for Analog Interfaces,* GR-506-CORE, Issue 1 June 1996, paragraph 15 and table 5-2, below.

Table 5-2. DTMF Generation and Reception from Users and Trunks

		High Group Frequencies Nominal Frequency in Hz			
		1209 Hz	1336 Hz	1477 Hz	1633 Hz
Low Group Frequencies Nominal Frequency in Hz	697 Hz	1	2	3	FO (A)
	770 Hz	4	5	6	F (B)
	852 Hz	7	8	9	I (C)
	941 Hz	*	0	A or #	P (D)

5.4.2.1 Standard Digit Format for Precedence

[Required: TS, EOS, MFS - Conditional: SMEO, PBX1] In addition, the DSN switching system shall be capable of outpulsing and interpretation of DTMF precedence digits in digit 0 through 4 format. (i.e. O=FLASH OVERRIDE, 1=FLASH, 2=IMMEDIATE, 3=PRIORITY, and 4=ROUTINE)

5.4.3 Multi-Frequency (MF R1 2/6) Signaling

[Required: TS, EOS, MFS – Conditional: SMEO, PBX1] The DSN switching system shall be capable of outpulsing and reception of MF(R1) 2/6 signaling requirements in accordance with

Telcordia Technologies *Signaling for* ***Analog Interfaces,*** GR-506-CORE, Issue 1, June 1996, paragraph 16 and its subparagraphs and Table 5.3 shown below.

Table 5-3. MF(R1)2/6 Generation and Reception for Trunks

Digits and Control Codes	Nominal Frequencies (Hz)	Precedence Digits
0	1300 + 1500	(FO) FLASH OVERRIDE
1	700 + 900	(F) FLASH
2	700 + 1100	(I) IMMEDIATE
3	900 + 1100	(P) PRIORITY
4	700 + 1300	(R) ROUTINE
5	900 + 1300	
6	1100 + 1300	
7	700 + 1500	
8	900 + 1500	
9	1100 + 1500	
KP	1100 + 1700	
S/T	1500 + 1700	

5.5 Alerting Signals and Tones

Alerting signals are applied to an access line by the switch interface to inform the end-user of an incoming call.

5.5.1 Ringing

[Required: EOS, SMEO, MFS, PBX1] DSN switching systems shall apply ringing tones and cadences as shown in Table 5-4.

Table 5-4. DSN Ringing Tone and Cadence

Signal	Frequency (Hz)	Single Level Tone	Composite Level	Interrupt Rate	Tone On	Tone Off
Alerting (Ringing) Normal or Routine Call						

4- Wire and 2-Wire	20	86V RMS		10 IPM	2000 ms	4000 ms
Alerting (Ringing) Precedence Call						
4- Wire and 2-Wire	20	86V RMS		30 IPM	1640 ms	360 ms

5.5.2 DSN Information Signals

[Required: EOS, SMEO, MFS, PBX1] DNS switches shall implement the tone signals and cadences shown in Table 5-5.

Table 5-5. DSN Information Signals

Signal	Frequencies (Hz)	Single Tone Level	Composite Level	Interrupt Rate	Tone On	Tone Off
Audible Ringback Precedence Call	440 + 480 (Mixed)	-19 dBm0	-16 dBm0	30 Impulses Per Minute (IPM)	1640 ms	360 ms
Preemption Tone	440 + 620 (Mixed)	-19 dBm0	-16 dBmo		Steady on	
Call Waiting (Precedence Call)	440	-13 dBm0		Continuous at 6 IPM	100 ± 20 ms Three Bursts	9700 ms
Conference Disconnect Tone	852 and 1336 (Alternated at 100 ms Intervals)	-24 dBm0		Steady on	2000 ms (per occurance)	
Override Tone	440			Continuous at 6 IPM	2000 ms (followed by) 500 ms on and 7500 ms off	
Camp On	440	-13 dBm0			Single burst 0.75 to 1 second	

5.6 Common Channel Signaling Number 7 (CCS7)

The Common Channel Signaling Number 7 (CCS7) system shall perform interswitch signaling functions for the DSN. The following specifications represent the set of features standardized for CCS7 in the DSN.

[Required: MFS, TS, EOS - Conditional: SMEO] CCS7 shall be in accordance with the Signaling System 7 (SS7) requirements specified in the most current ANSI T1. 100 series of standards and shall be capable of internetworking with ITU-T signaling system no. 7 networks. Exceptions to these standards are explicitly noted in this section. Only those CCS7 requirements that differ from their corresponding ANSI common channel signaling standard section are included.

5.6.1 CCS7 Network Structure

[Required: MFS, TS, EOS - Conditional: SMEO] The CCS7 network shall serve as a separate call control and management network that is overlaid on the DSN. The CCS7 network structure is a one-level hierarchy composed of multiple mated pairs of Signal Transfer Points (STP) and their associated Service Switching Points (SSP) and signaling links in accordance with ANSI T1.110. DSN End Office, Multi-Function, and Tandem switching systems shall be CCS7 Signaling Points (SP). The CCS7 network structure is shown in Figure 5-1. The CCS7 network consists of mated STP pairs connected by "C-Links", these mated pairs may be grouped into "quads" with "B-Links". Signal Transfer Points shall be implemented external to the switches.

Figure 5-1. CCS7 Backbone Network Architecture

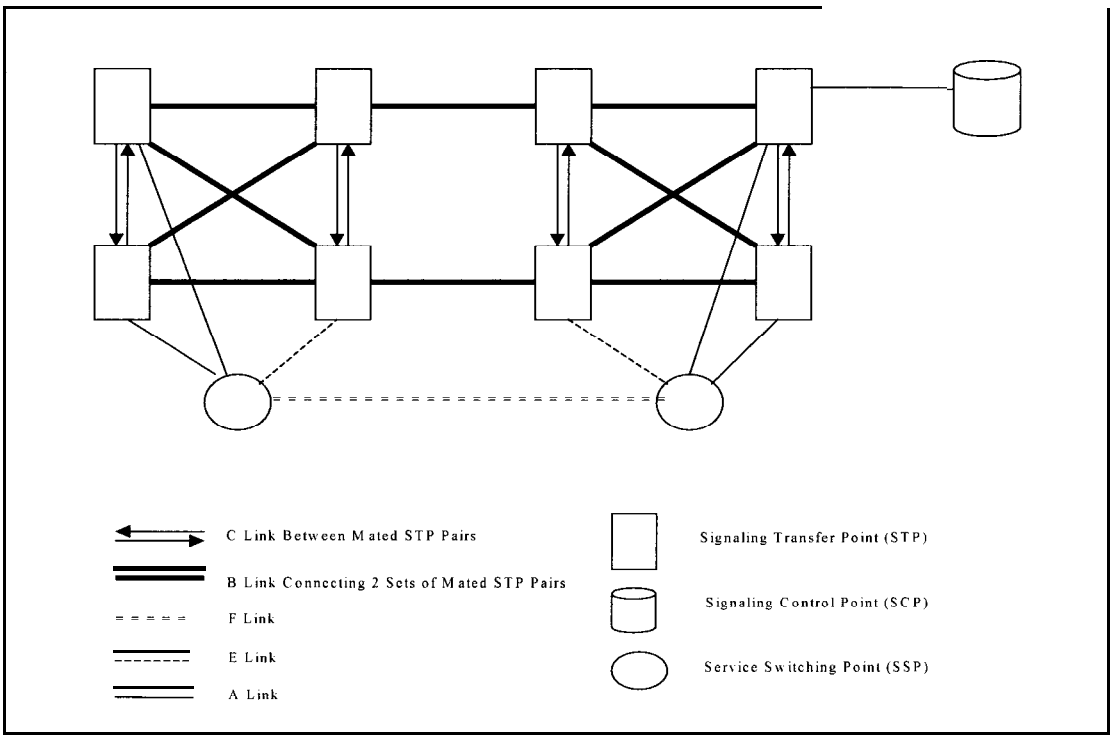

5.6.2 Functional Description of the Signaling System Message Transfer Part (MTP)

[Required: MFS, TS, EOS - Conditional: SMEO] The CCS7 MTP shall be as specified in ANSI T1.111-1996, chapters 1-8. Specific requirements for DSN applications are given in the following subsections:

5.6.2.1 Signaling System Structure – Functional Levels

The fundamental principle of the signaling system structure is the division of functions into separate modules or entities.

5.6.2.1.1 Signaling Data Link Functions (Level 1)

[Required: MFS, TS, EOS - Conditional: SMEO] The signaling data link is a bi-directional digital transmission path comprised of digital signaling links. A maximum of 72 digital signaling links shall be supported at an individual DSN signaling point (SP). Because of its worldwide scope, the CCS7 shall support both terrestrial and satellite transmission for the signaling data links at bit rates of 56 or 64 kbps.

5.6.2.1.2 Signaling Link Functions (Level 2)

[Required: MFS, TS, EOS - Conditional: SMEO] The CCS7 signaling link functions apply to both terrestrial and satellite transmission. These shall require the implementation of both types of error correction methods specified in SS7 (the basic error correction method for use on terrestrial signaling data links and the preventive cyclic retransmission method for use on satellite signaling data links).

5.6.3 Signaling Network Functions and Messages

5.6.3.1 Routing Label

[Required: TS, MFS, EOS - Conditional: SMEO]
The CCS7 uses the U.S. national routing label structure (specified in ANSI T1 .l 11.4) for signaling messages between CCS7 SPs. The routing label shall also be used for routing signaling messages to other U.S. networks that comply with the ANSI SS7 standard. The CCS7 routing label shall comply with the routing label structure for the U.S. networks as shown in Figures 3A and 3B of the T1 .l 11.4. Signaling point codes in the CCS7 are assigned by the Network Administrator in accordance with ANSI guidelines.

5.6.3.2 Handling Messages Under Signaling Link Congestion

[Required: MFS, TS, EOS - Conditional: SMEO] Criteria for the determination of CCS7 signaling congestion status shall be as specified by ANSI T1 .111.4, section 3.8 for U.S. networks. Initial Address Messages (IAM) carrying FLASH or FLASH OVERRIDE calls shall be assigned Level 3, IMMEDIATE calls shall be assigned level 2, PRIORITY calls shall be assigned level 1, and ROUTINE calls shall be assigned level 0 in the CCS7.

5.6.3.3 Message Discrimination and Distribution Functions

[Required: MFS, TS, EOS - Conditional: SMEO] The message discrimination function examines the Destination Point Code (DPC) of a received signaling message to determine whether or not it is destined to the receiving SP. Message distribution determines to which user of the MTP

a received signaling message will be directed. This function is also required in all CCS7 signaling nodes.

5.6.3.4 Signaling Network Management

[Required: MFS, TS, EOS - Conditional: SMEO] DSN switching systems shall meet the Signaling Network Management requirements in the Telcordia Technologies GR-606-CORE, *Common Channel Signaling Section* 6.5, December 2000, paragraph 4.

5.6.3.5 Changeback

[Required: EOS, MFS, TS - Conditional: SMEO] The objective of the changeback procedure is to ensure that signaling is diverted from the alternative signaling link(s)to the signaling link made available as quickly as possible, while avoiding message loss or duplication. DSN switching systems shall not use sequence control procedures to perform changeback. The last sentence of the third requirement in the *Telcordia Technologies* GR-606-CORE, December 2000, paragraph 4.3 is changed to read as follows:

The switch shall use the time-controlled diversion procedure.

5.6.4 Noncircuit - Related Information Exchange - Signaling Connection Control Part (SCCP)

[Required: MFS, TS, EOS - Conditional: SMEO] DSN switching systems shall meet the SCCP requirements in the Telcordia Technologies GR-606-CORE, December 2000, paragraph 5 and its subparagraphs.

5.6.5 Additional Procedures for Switch-to-Switch/SCP TCAP Messages

[Required: MFS, TS, EOS - Conditional: SMEO] DSN switching systems equipped for CCS7 shall meet the requirements for switch-to-switch/SCP TCAP messaging requirements in the Telcordia Technologies GR-606-CORE, *Common channel Signaling Section* 6.5, December 2000, paragraph 6 and its subparagraphs.

5.6.6 Message Transfer Part (MTP) Restart

[Required: EOS, MFS, TS - Conditional: SMEO] The Message Transfer Part Restart procedure shall be as specified in ANSI T1. 1 1 1 - 1996, paragraph 9 and its subparagraphs.

5.6.7 Signaling Link Management

[Required: EOS, MFS, TS - Conditional: SMEO] There are three signaling link management methods specified in ANSI T1. 111.4: Basic signaling link management procedures, signaling link

management procedures based on automatic allocation of signaling terminals, and signaling link management procedures based on automatic allocation of signaling data links and signaling terminals. The automatic allocation of signaling data links and signaling terminals shall be the method implemented in the CCS7.

5.6.8 Signaling Route Management

[Required: EOS, MFS, TS - Conditional: SMEO] CCS7 SP nodes shall be capable of responding appropriately to the receipt of signaling route management messages. For example, a CCS7 SP node may be required to alter its routing information in response to a transfer prohibited, restricted, or allowed message.

5.6.9 Common Characteristics of Message Signal Unit (MSU) Formats

The service information octet of the MSU contains the service indicator and subservice field.

5.6.9.1 Service Indicator

[Required: EOS, MFS, TS - Conditional: SMEO] Requirements for the Service Indicator Codings shall be as specified in ANSI T1 . 11 l-l 996, paragraph 14.2.1.

5.6.9.2 Subservice Field

[Required: EOS, MFS, TS - Conditional: SMEO] The CCS7 shall use the network code (10) as specified in ANSI T1 .l 11.4. CCS7 messages originating and terminating within the CCS7 or another network conforming to the ANSI standard shall also be coded with the national network code (10). Requirements for the Subservice Field shall be as specified in ANSI Tl . 1 1 1- 1996, paragraph 14.2.2.

5.6.10 Formats and Codes of Signaling Network Management Messages

[Required: EOS, MFS, TS - Conditional: SMEO]

The following paragraphs specify CCS7 requirements for the formats and codes of CCS7 signaling network management messages.

a) The signal link code (SLC), used to identify one of 16 possible signaling links between each pair of adjacent (directly connected) signaling nodes, indicates the identity of a signaling link to which a network management message pertains.

b) Each pair of adjacent signaling nodes shall coordinate the assignment of SLCs to ensure compatibility.

c) The SLC may be used in the CCS7 to identify the preferred order of signaling data link selection from among the inter-exchange circuits. Normally, one associated signaling link

between two CCS7 signaling points will be implemented and designated with an SLC at both ends of 0000. The order of selection of backup signaling data links to be obtained from the inter-exchange circuit group may be pre-coordinated and prioritized at both ends. SLC 0001 is assigned to the circuit normally selected first as a backup signaling link. The remaining SLCs are assigned to inter-exchange circuits in the order of their selection as signaling data links. This order of selection shall not be interpreted as prioritizing the signaling links. Any circuit selected to serve as a signaling link remains in service for that purpose until it becomes unavailable (e.g., by failure or management withdrawal, etc.).

d) This pre-assignment can be overridden when communication between both CCS7 signaling points over alternative links is possible. In this case, a signaling data link connection order message may be utilized to indicate which IST will be assigned as a signaling data link and which corresponding SLC will be used.

5.6.11 Numbering of Signaling Point Codes

[Required: EOS, MFS, TS - Conditional: SMEO] The CCS7 numbering of signaling point codes shall be as specified in ANSI Tl .l 11.8. The DSN meets the ANSI requirements for a large network and has been granted a network code value of 24 1. ANSI Tl . 111.8, Table B 1, shows the current list of assigned large network codes. Signaling point codes in the CCS7 are assigned by the Network Administrator in accordance with ANSI guidelines.

5.6.12 Functional Descriptions of the Integrated Services Digital Network (ISDN) User Part

5.6.12.1 Scope, Purpose, and Application

[Required: MFS, TS - Conditional: EOS, SMEO] The ISDN User Part specifies the signaling functions, codes, messages, and procedures needed to provide services for circuit-switched voice and data services in the CCS7.

5.6.12.2 End-To-End Signaling

[Required: MFS, TS - Conditional: EOS, SMEO] End-to-end signaling transports signaling information between the end points of a circuit-switched connection or between any two points in the signaling network. Pass along message (PAM), ANSI T1. 111, and SCCP, ANSI Tl. 112, end-to-end signaling methods shall be supported in CCS7.

5.6.13 Formats and Codes – Integrated Services Digital Network (ISDN) User Part Parameters

[Required: MFS, TS, EOS - Conditional: SMEO] The IS-UP specifies the signaling functions, codes, and procedures needed to provide services for circuit-switched voice and data services. CCS7 switching services shall meet the requirements in the Telcordia Technologies LSSGR, *Switching System Generic Requirements for Call Control Using the Integrated Services Digital*

Network User Part, GR-3 17-CORE, November 2000, except as modified in the following subparagraphs.

5.6.13.1 Notification Indicator

[Required: MFS, TS, EOS - Conditional: SMEO] The Following code shall be added to indicate a delay may be experienced in completing the call: 0000100 call completion delay.

5.6.13.2 IS-UP Messages

[Required: MFS, TS, EOS - Conditional: SMEO] CCS7 shall use the messages in the Telcordia Technologies, GR-3 17-CORE, November 2000, Appendix A. In addition, CCS7 shall meet the requirements in ANSI T 1.113.2 and T1.619a for messages which are not specified in the Telcordia Technologies generic requirements.

5.6.13.3 IS-UP Parameters

[Required: MFS, TS, EOS - Conditional: SMEO] CCS7 shall use the IS-UP parameters specified in the Telcordia Technologies, GR-3 17-CORE, November 2000, Appendix B. In addition, CCS7 shall use IS-UP parameters specified in ANSI T1. 113.3 for parameters not specified in the Telcordia Technologies requirements.

5.7 ISDN DSS1 Signaling

5.7.1 DSN ISDN User to Network Signaling.

The objective of this DSN ISDN user-to-network signaling specification is to provide digital out-of-band signaling on an ISDN interface. The DSN ISDN user-to-network signaling specification, which captures protocols under the umbrella of Digital Subscriber Signaling System No. 1 (DSS 1), is intended to provide a signaling protocol that will allow signaling over an ISDN interface to support:

a. User access to DSN switches equipped with the CCS7.

b. Circuit-switched (CS) calls (both data and voice).

c. Supplementary services that include unique DSN features.

d. Future DSN access signaling requirements for other network services, including public and private network inter-working in intra-and inter-country environments, as applicable, and interoperability with other DoD Networks.

5.7.1.1 Application

[Required: MFS, EOS, SMEO, PBX1 - Conditional: PBX2] This section is the DSN switch requirements for user-to-network signaling over an ISDN interface. It specifies the interface signaling protocol for application throughout the DSN and defines the requirements of the DSN user-to-network signaling for exchanging information between customer premises equipment (CPE), including terminal equipment (TE) and PBXs, and DSN network switches. The exchange

of signaling information between CPE and DSN network switches shall be over the D-channel of the ISDN interface. The D-channel may be used either for associated signaling or non-associated signaling as defined in Annex F of American National Standards Institute (ANSI) T1.607. In-band information and tones sent over the B-channel shall be allowed, when applicable. In the DSN host countries, DSN connections may be made with public, private, and military CPE and networks. Protocol and/or signaling gateway conversions shall be required in some instances to provide the desired DSN connections. Such translations shall be handled on a case-by-case basis as detailed in site specific contracts.

5.7.1.2 Physical Layer.

[Required: MFS, EOS, SMEO, PBX1- Conditional: PBX2] The DSN user-to-network signaling Physical Layer specification for the basic rate interface shall be ANSI T1.605 and ANSI T1.601 or ITU Recommendation 1.430 as required for OCONUS applications. The DSN user-to-network signaling physical layer specification for the primary rate interface operating at 1.544 megabits per second (Mbps) shall be ANSI T1.408. The DSN user-to-network signaling specification for the primary rate interface operating at 2.048 Mbps shall be ITU Recommendation I.43 1.

5.7.1.2.1 S/T Reference Point

[Required: MFS, EOS, SMEO, PBX1- Conditional: PBX2] For the basic rate interface at the S/T reference point, B-channels shall have the capability of either restricted or unrestricted operation. The restricted capability is necessary for backward compatibility with networks that support the restricted 64 kbps operation. The D-channel shall have unrestricted capability.

5.7.1.3 Data-Link Layer.

[Required: MFS, TS, EOS, SMEO, PBX1- Conditional: PBX2] The DSN user-to-network signaling data-link layer shall be as specified in the ANSI T1.602, *ISDN -Data-Link Layer Signaling Specification for Application at the User-Network Interface,* which is a pointer document completely aligned with the ITU-T Recommendations Q.920 and Q.921.

5.7.1.3.1 Data-Link Connections

[Required: MFS, TS, EOS, SMEO, PBX1- Conditional: PBX2] Point-to-point, broadcast, and multipoint data-link connections shall be provided for DSN applications. The ANSI T1.602 depicts examples of point-to-point and broadcast data-link connections. Other point-to-point applications of this specification shall be allowed, such as the support of multiple terminals at the user-to-network interface. A data-link layer management entity shall be provided to support DSN management.

5.7.1.3.2 Peer-to-Peer Procedures of the Data-Link Layer

[Required: MFS, TS, EOS, SMEO, PBX1- Conditional: PBX2] Within the DSN, peer-to-peer procedures of the data-link layer shall follow the procedures described in the ANSI T1.602, with the additions provided in this paragraph. The Network Administration shall have the responsibility to determine the system parameter values on the DSN user-to-network interface. These parameters shall initially be set to the default values of the ANSI standard. A means is available in Appendix IV of Q.92 1 to change the assignment of the system parameters within the range of values specified

by the ANSI standard. DSN terminal equipment shall support other values of T200 to allow for multiple terminals on the user side, together with satellite connections in the DSN user-to-network transmission.

5.7.1.4 Layer 3 DSN User-to-Network Signaling

[Required: MFS, TS, EOS, SMEO, PBX1- Conditional: PBX2] The layer 3 protocols specify the messages and information elements, coding and formats, and procedures employed on the user-to-network interface in order to establish, maintain, and terminate network connections across an ISDN.

5.7.1.4.1 Overview of Layer 3.

The overview of layer 3 of the DSN user-to-network signaling layer 3 shall be as specified in the ANSI T1.615. The ANSI standard is consistent with the seven-layer model described in ITU Recommendation 1.320. ANSI T1.615 describes, in general terms, the D-channel layer 3 DSS1 functions and protocol employed across an ISDN user-to-network interface.

5.7.1.4.2 DSN User-to-Network Signaling for Circuit-Switched (CS) Bearer Service

[Required: MFS, TS, EOS, SMEO, PBX1- Conditional: PBX2] The DSN user-to-network signaling layer 3 specification for CS bearer service (or CS-Basic Call) shall be as specified in the ANSI T1.607 for ISDN primary and basic rate interfaces. ANSI T1.607 is generally aligned with the ITU Recommendation 4.93 1 (to the extent possible) and covers U.S. unique requirements for CS-Basic Call.

5.7.1.4.3 Sequence of Messages for DSN Circuit-Switched (CS) Calls

[Required: MFS, TS, EOS, SMEO, PBX1- Conditional: PBX2] Call establishment involves SETUP, SETUP ACK, CALL PROCEEDING, ALERTING, CONNECT, and CONNECT ACK messages. The PROGRESS message shall be used with interworking or with in-band information and patterns to indicate the progress of a call. A three-step call clearing phase shall use the DISCONNECT, RELEASE, and RELEASE COMPLETE messages. The miscellaneous messages - INFORMATION, STATUS ENQUIRY (and STATUS), and NOTIFY - shall be used for the purposes described in ANSI T1.607.

5.7.1.4.4 Message Functional Definitions and Content

[Required: MFS, TS, EOS, SMEO, PBX1- Conditional: PBX2] The Layer 3 messages used by the DSN user-to-network signaling for CS connections shall be as specified by the ANSI T1.607 except for messages modified in the following paragraphs.

a. SETUP Message. The SETUP message is sent by the calling user to the network or by the network to the called user to initiate call establishment. DSN calls shall use the setup message specified in ANSI T1.607. The Channel Identification, Calling Party Number (when available), and Called Party Number are mandatory information elements (IEs). For an MLPP call (invoking MLPP feature) on the DSN user-to-network interface, the SETUP message shall include the

Precedence Level information element. It shall also contain other IEs such as the Business group (BG) IE for the COI feature when such unique DSN features are required and the Call identity IE (as defined in ITU Recommendation 4.93 1) for the MLPP feature. The Precedence Level and MLPP service domain (both contained in the Precedence Level IE) and Calling Party Number (contained in the Calling Party Number IE), shall be used to mark the circuit (identified in the Channel Identification IE) to be preempted as "reserved" for reuse by the preempting call when the LFB option is exercised on the DSN user-to-network interface. Table 5-6 shows the SETUP message content for an MLPP call; important differences from the SETUP message in ANSI T1.607 are specified below.

Table 5-6. Setup Message For MLPP Call

Message Type: SETUP			
Significance: Global			
Direction: Both			
Information Element	**ANSI T1.607 Reference**	**Direction**	**Type**
Protocol Discriminator	4.2	both	M
Call Reference	4.3	both	M
Message Type	4.4	both	M
Repeat Indicator	4.5	both	0 (Note 1)
Bearer Capability	4.5	both	M (Note 2)
Channel Identification	4.5	both	M (Note 3)
Progress Indicator	4.5	both	0 (Note 4)
Network Specific Facilities	4.5	both	0 (Note 5)
Display	4.5	n-u	0 (Notes 6 & 7)
Keypad Facility	4.5	u-n	0 (Note 8)
Signal	4.5	n-u	0 (Note 9)
Calling Party Number	4.5	both	M (Note 10)
Calling Party Subaddress	4.5	both	O (Note 11)
Called Party Number	4.5	both	M (Note 12)
Called Party Subaddress	4.5	both	0 (Note 13)
Transit Network Selection	4.5	u-n	0 (Note 14)
Lower Layer Compatibility	4.5	both	0 (Note 15)
High Layer Compatibility	4.5	both	0 (Note 16)
User-User	4.5	both	0 (Notes 17 & 18)
Locking Shift (Note I)	4.5	u-n	0 (Note 19)
Operator System Access	4.6	u-n	0 (Note 20)
Precedence Level	(Note II)	both	M
M = mandatory and 0 = optional elements.			
General Note: Notes 1 through 20 and references of the ANSI T1.607 IE are not repeated for this figure but still apply. (Refer to ANSI T1.607 IE for detailed notes and references.)			
Note I: The Locking Shift IE to identify IEs in U.S. national codeset 5.			
Note II: The Precedence Level IE is in U. S. national codeset 5 and is defined in ANSI T1.619-1992 and T1-619a-1994.			

5.7.1.4.5 General Message Format and Information Elements (IE) Coding

[Required: MFS, TS, EOS, SMEO, PBX1- Conditional: PBX2] The guidelines specified in the ANSI T1.607 shall be followed in this specification.

a. Application of Codesets within the DSN. The DSN unique IEs, if any, shall employ the following order of preference in using the codesets:

(1) Codeset 0 - highest.

(2) Codeset 5.

(3) Codeset 6 - lowest.

b. Application of Information Elements (IEs) in the DSN. The DSN user-to-network signaling protocol shall maximize the use of codeset "00" (ITU standardized coding) and codeset " 10" (national standard) IEs (when codeset "00" is not possible). Following are guidelines for the specific use of such IEs in the DSN.

(1) Called Party Number Information Element (IE). The Called Party Number IE, which identifies one called party of a call, shall accommodate the DSN numbering plan. The variable length number digits parameter in the information element may carry the area code, switch code, and line number from the DSN numbering plan.

(2) Calling Party Number Information Element (IE). The Calling Party Number IE, which identifies the origin of a call, shall accommodate the DSN WDNP as stated for the Called Party Number IE.

(3) Keypad Facility Information Element (IE). The Keypad Facility IE, which conveys ASCII characters entered by means of a terminal keypad (when employed), shall contain the digits entered by a DSN user.

(4) Channel Identification Information Element (IE). The Channel Identification IE identifies a channel within the interface(s) controlled by the signaling procedures. The channel number/slot map parameter within it identifies the B-channel controlled by a particular message. The following two methods of B-channel identification are available for use in the DSN: binary channel number assigned to the channel and a slot map that identifies the time slots used by the channel. The parameter shall be coded exclusively for one method depending upon the number/map parameter information. Both primary rate interfaces, 1.544 Mbps and 2.048 Mbps, shall be supported in accordance with the slot map in ITU-T Q.93 1.

(5) Transit Network Selection Information Element (IE). The Transit Network Selection IE identifies one requested transit network. It may be repeated in a message to select a sequence of transit networks through which a call must pass. For example, the element may be employed in a SETUP message to specify one or a sequence of transit networks (other than the user-assigned transit network) through which a call must pass. In the case of the DSN user-to-network signaling, this IE shall be used to specify the DSN or a network other than the DSN as a transit network. (DoD networks and foreign PTTs are examples.)

(6) Cause Information Element (IE). The Cause IE shall be in accordance with ANSI T1.619a.

(7) Signal Information Element (IE). The Signal IE, shall be in accordance with ANSI T1.619a. The signal shall be included in the DISCONNECT, PROGRESS, and SETUP messages as appropriate for the MLPP feature.

(8) Notification Indicator Information Element (IE). The Notification Indicator IE, which indicates information pertaining to a call, shall contain the notification description code of "0 0 0 0 1 0 0" (value 4) for the MLPP feature to indicate to the calling user a possible call completion delay when an LFB query is invoked in response to an MLPP call setup.

5.7.1.4.6 Supplementary Services.

[Conditional: MFS, EOS, SMEO, PBX1, PBX2] If provided, Supplementary Services shall be in accordance with the following standards:

- ANSI T1.607-1998, ISDN Layer 3 Signaling Specifications for Circuit Switched Bearer Service for Digital Subscriber Signaling System No. 1 (DSS 1)
- ANSI T1.6 13- 1992, ISDN Call Waiting Supplementary Service
- ANSI T1.616-1992, ISDN Call Hold Supplementary Service.
- ANSI T1.62 1- 1992, ISDN User-to-User Signaling Supplementary Service
- ANSI T1.632-1993, ISDN Normal Call Transfer Supplementary Service
- ANSI T1.642-1993, ISDN Call Deflection Supplementary Service
- ANSI T1.643-1995, ISDN Explicit Call Transfer Supplementary Service
- ANSI T1.647-1995, ISDN Conference Calling Supplementary Service

SECTION 6 – Transmission

6.0 DSN Transmission Interface

[Required: TS (trunks only), MFS, EOS, SMEO, PBX1, PBX2] The transmission characteristics of switching systems used in, or interfacing to the DSN, shall not degrade the end-to-end transmission performance of the DSN. The transmission characteristics of the switching system shall be based on the switching matrix using Pulse Code Modulation (PCM) digital technology. These interface requirements are mandatory for interfacing with DSN circuits and may also be used for connectivity between DSN switches. These transmission requirements shall be measured in accordance with IEEE Standard 743.

6.1 Input Impedance

[Required: TS (trunks only), MFS, EOS, SMEO, PBX1, PBX2] The input impedance seen looking into each analog line or trunk interface shall meet the requirements in Table 6-l.

Table 6-l. Input Impedance Requirements

PATH THROUGH NEAR END	SWITCH FAR END	REFERENCE IMPEDANCE	FREQUENCY RANGE	MIN RETURN LOSS (at input power level of dBmO)
Line	Digital Interface or 4-Wire Trunk	900 ohms +2.16 microfarad	200-500 Hz 500-340OHz	20dB 26dB
Remote Line (0 dB loss)	Digital Interface or 4-Wire Trunk	900 ohms +2.16 microfarad	200-500 Hz 500-3400Hz	20dB 26dB
Remote Line (≥ 2 dB loss)	Digital Interface or 4-Wire Trunk	900 ohms +2.16 microfarad	200-500 Hz 500-3400Hz	14dB 20dB
2-Wire Trunk	Digital Interface or 4-Wire Trunk	900 ohms +2.16 microfarad	200-500 Hz 500-1000 Hz 1000-3400 Hz	20dB 26dB 30dB
4-Wire Trunk	Digital Interface or 4-Wire Trunk	600 ohms	200-500 Hz 500-1000 Hz 1000-3400 Hz	20dB 26dB 30dB

6.2 Inserted Connection Loss

[Required: TS (trunks only), MFS, EOS, SMEO, PBX1, PBX2] The connection loss inserted by the switching system shall meet the following requirements.

6.2.1 Average Loss At 1004 Hz And Loss Control

[Required: TS (trunks only), MFS, EOS, SMEO, PBX1, PBX2] The minimum insertion loss at 1004 Hz shall be O.OdB. The maximum average loss measured at 1004 Hz shall be as shown in Table 6-2.

Table 6-2 Average Loss Requirements

Connection Type	Digital System Requirement (dB)
Line or Remote Line to Line Remote Line	1
Line or Remote Line to 2-Wire, 4-Wire	0.75
Line or Remote Line to Digital Interface	0.5
2-Wire or 4-Wire trunks to 2-Wire or 4-Wire trunks	0.75
Digital Interface to 2-Wire or 4-Wire trunks	0.4
Digital Interface to Digital Interface	N/A

6.2.2 Loss Variability At 1004 Hz

[Required: TS (trunks only), MFS, EOS, SMEO, PBX1, PBX2] The maximum loss variability shall be as follows. This shall be met by at least 99 percent of the connections of each connection type shown in Table 6-3.

Table 6-3. Maximum Loss Variability

Connection Type	Loss Variability (dB)
Line to Line, 2-Wire or 4-Wire	± 0.5
4-Wire or 2-Wire to 2-Wire or 4-Wire	± 0.5
Digital Interface to Line, 2-Wire, or 4-Wire	± 0.3
Remote Line to Digital Interface	± 0.5
Digital Interface to Digital Interface	N/A

6.2.3 Attenuation Distortion

[Required: TS (trunks only), MFS, EOS, SMEO, PBX1, PBX2] The attenuation distortion shall be as follows. This shall be met by at least 99 percent of the connections of each connection type as defined by the minimum and maximum losses shown in Table 6-4.

Table 6-4. Attenuation Distortion

Connection Type	Frequency (Hz)	Min. Loss (dB)	Max Loss (dB)
Line, Remote Line,	200	0	5.0
2-Wire to Line, Remote	300	-0.5	1.0
Line, 2-Wire	3000	-0.5	1.0
	3200	-0.5	1.5
	3400	0.0	3.0
Digital Interface to Line,	200	0 (1)	2.0 (1)
Remote Line, 2-Wire and	300	-0.25	0.5
Line, Remote Line, 2Wire-	3000	-0.25	0.5
to Digital Interface (2)	3200	-0.25	0.75
	3400	0	1.5
2-Wire, Line, Remote	200	0	4.0
Line to 4-Wire	300	-0.4	0.65
	3000	-0.4	0.65
	3200	-0.4	1.5
	3400	0	3.0
4-Wire to 4-Wire	200	0	3.0
	300	-0.3	0.3
	3000	-0.3	0.3
	3200	-0.3	1.5
	3400	0	3.0
Digital Interface-to-4-Wire	200	0(1)	2.0 (1)
Trunk and 4-Wire Trunk-to	300	-0,15	0.15
-Digital Interface (2)	3000	-0.15	0.15
	3200	-0.15	0.75
	3400	0	1.5

(1) Value given at 200 Hz is for digital-to-analog direction. For analog-to-digital direction, add 1 .O dB of loss to the value at 200 Hz.

(2) Under the assumption that the signal always passes through the equivalent of the digital interface, these two requirements control attenuation distortion in a digital EOS.

6.2.4 Tracking Error

[Required: TS (trunks only), MFS, EOS, SMEO, PBX1, PBX2] This requirement shall be met by at least 50 percent of the connections of each connection type. The tracking error shall be less than or equal to the values shown in Table 6-5.

Table 6-5. Tracking Error

Connection Type	Input Level (dBmO)	Tracking Error (dB)
Digital Interface to Line, Remote Line,	-37 to +3	± 0.25
2-Wire, or 4-Wire	-50 to -37	± 0.50
All others (except Digital Interface to	-37 to +3	± 0.50
Digital Interface)	-50 to -37	+ 1.0

6.3 Frequency Response

[Required: TS (trunks only), MFS, EOS, SMEO, PBX1, PBX2]. Frequency response shall be calculated as loss relative to 1004 Hz as shown in Tables 6-6 and 6-7. Minus (-) indicates less loss and plus (+) indicates greater loss.

Table 6-6. Trunk-to-Trunk Frequency Response

Frequency (HZ)	Loss at 0 dBm0 4-Wire to 4-Wire
60	20 dB min
300-3000	-0.3 to +0.3 dB
3200	-0.3 to 1.5 dB
3400	Oto3 dB

Table 6-7. Line-To-Line Frequency Response

Frequency (HZ)	Loss at 0 dBm0
60	20 dB min
300-3000	-0.5 to 1 dB
3200	-0.5 to 1 db
3400	0 to 3 dB

6.4 Overload Level

[Required: TS (trunks only), MFS, EOS, SMEO, PBX1, PBX2] The overload level at 900 ohm impedance shall be +3 dBmO.

6.5 Return Loss

[Required: TS (trunks only), MFS, EOS, SMEO, PBX1, PBX2] Return loss for various ports shall be as specified in the following sections.

6.5.1 Two-Wire Line Return Loss

[Required: TS (trunks only), MFS, EOS, SMEO, PBX1, PBX2] Return loss shall be measured from the 2-wire line side at 900 ohms in series with 2.16 microfarads on a line-to-line or line-to-trunk connection. Minimum return losses shall be:

20 dB @ 200-500 Hz
26 dB @ 500-1000 Hz
30 dB @ 1000-3400 Hz

6.5.2 Four-Wire Trunk Return Loss (Impedance)

[Required: TS (trunks only), MFS, EOS, SMEO, PBX1, PBX2] Return loss shall be measured from the 4-wire trunk side at 600 ohms resistive on a trunk-to-trunk or trunk-to-line connection. Minimum return losses shall be:

20 dB @ 200-500 Hz
26 dB @ 500-1000 Hz
30 dB @ 1000-3400 Hz

6.6 Lowitudinal Balance

[Required: TS (trunks only), MFS, EOS, SMEO, PBX1, PBX2] The longitudinal balance shall meet the requirements shown in Table 6-8. At 3400 Hz, the minimum balance shall be 50 dB. The method of measurement shall be as specified in the IEEE Standard 455-1985, Standard Testing Procedures for Measuring Longitudinal Balance of Telephone Equipment Operating in the Voice Band.

Table 6-8. Longitudinal Balance

Connection	Longitudinal Balance (dB)		
	f(Hz)	Avg	Min
All connection types between analog interfaces	200	63	58
	500	63	58
	1000	63	58
	3000	58	53

6.7 60 Hz Longitudinal Current

[Required: TS (trunks only), MFS, EOS, SMEO, PBX1, PBX2] Under test conditions with 60 Hz, the system noise shall be no greater than 23 dBrnC0. (This requirement shall also apply at 50 Hz.)

6.8 Idle Channel Noise

[Required: TS (trunks only), MFS, EOS, SMEO, PBX1, PBX2] Idle channel noise consists of C-Message Weighting and Flat Weighted.

6.8.1 C-Message Weighting

[Required: TS (trunks only), MFS, EOS, SMEO, PBX1, PBX2] Ninety-nine percent of the connections shall have C-message weighting noise less than or equal to the values shown in Table 6-9.

Table 6-9. C-Message Waiting

Connection	Average	Noise (dBrnC0) 99 percent
Analog-analog	20	23
Analog-digital	17	20
Digital-analog	17	20

6.8.2 Flat-Weighting Noise

[Required: TS (trunks only), MFS, EOS, SMEO, PBX1, PBX2] The mean of the idle channel noise distribution (C-Message and Flat Weighting) shall be less than or equal to 35 dBrn0, as measured with a 3 kHz flat weighting. The 99 percent point on the idle channel noise distribution shall be less than 39 dBrn0 when measured with a 3-kHz flat weighting.

6.9 Power Line Interference

[Required: TS (trunks only), MFS, EOS, SMEO, PBX1, PBX2] The power line frequencies, harmonics of power line frequencies, and noise introduced through the power supply shall have an RMS sum at least 55 dB below test tone level.

6.10 Impulse Noise

[Required: TS (trunks only), MFS, EOS, SMEO, PBX1, PBX2] The C-notched impulse noise shall not exceed 54 dBrnc0 with tone and 47 dBrnc0 without tone in a five-minute period on six measurements made during the busy hour. Measurement shall be taken using an impulse noise counter. The measurement shall be made by taking six random normal connections from voice frequency circuits through the switching equipment.

6.11 Crosstalk Coupling

[Required: TS (trunks only), MFS, EOS, SMEO, PBX1, PBX2] Worst case equal level crosstalk is to be 70 dB minimum in the range 200 to 3400 Hz. This is to be measured between any two paths through the system connecting a 0 dBm0 level tone to the disturbing pair. Crosstalk loss between the two directions of a circuit shall be 50 dB minimum in the range of 200 to 3400 Hz when measured at equal level points.

6.12 Intermodulation Distortion

[Required: TS (trunks only), MFS, EOS, SMEO, PBX1, PBX2] Intermodulation distortion, measured using the standard 4-tone test method, shall meet the requirements shown in Table 6- 10.

Table 6-10. Intermodulation Distortion

Connection	Second-Order (dB)		Third-Order (dB)	
	95 percent	Min	95 percent	Min
Line, remote line,2-Wire to line, remote line, 2-wire	44	43	4.5	44
Line, remote line, 2-wire to 4-wire	46	45	48	47
4-wire to 4-wire	50	49	52	51

Connection	Second-Order (dB)		Third-Order (dB)	
	95 percent	Min	95 percent	Min
Digital Interface to Line, remote line, 2-wire	47	46	50	49
Digital Interface to 4-wire	53	52	57	56

6.13 Signal To Distortion Ratio (C-Notched Noise)

[Required: TS (trunks only), MFS, EOS, SMEO, PBX1, PBX2] At least 99 percent of the connections of each connection type shall have a signal to distortion greater than or equal to the values shown in Table 6-l 1.

Table 6-11. Signal-to-Noise Distortion

Sinewave Input (dBmO)	Sinewave Freq. (Hz)	Analog to Analog	Analog to Digital Digital to Analog
0 to -30	200-3400	33	35
-40	200-3400	27	29
-45	200-3400	22	25

6.14 Absolute Delay

[Required: TS (trunks only), MFS, EOS, SMEO, PBX1, PBX2] The absolute one-way delay through the switch, excluding delays associated with RSU switching shall not exceed 600 microseconds analog-to-analog measured at 1800 Hz.

6.15 Envelope Delay Distortion

[Required: TS (trunks only), MFS, EOS, SMEO, PBX1, PBX2] The envelope delay difference between any two adjacent frequencies between 1000 and 2600 Hz shall not exceed 20 microseconds. On any properly established connection, the envelope delay distortion shall not exceed the limits shown in Table 6-12.

Table 6-12. Envelope Delay Distortion Limits

Band Widths (HZ)	Microseconds
1000 to 2600	190
800 to 2800	360
600 to 3000	500
400 to 3200	700

6.15.1 Echo Path Delay

[Required: TS (trunks only), MFS, EOS, SMEO, PBX1, PBX2] Echo path delay is twice the one-way transit time delay of a signal through a switching system connection path. Ninety-nine percent of the connections of each connection type shall have echo path delay less than or equal to the following values. The values shown in Table 6- 13 shall apply at the frequency at which the minimum delay occurs.

Table 6-13. Echo Path Delay

Connection Type	Echo Path Delay (ms)
Digital Interface to Digital Interface	1.4
Digital Interface to Line, 2-wire, or 4-wire	1.9
Line to Line, 2-wire, 4-wire;2-wire, 4-wire to 2-wire, 4-wire; Remote Line to Remote Line (Intra)	2.4
Digital Interface to Remote Line	4
Remote Line to line, 2-wire, 4-wire	4
Remote Line to Remote Line (Inter)	6.5

6.16 Bit Integrity

[Required: TS (trunks only), MFS, EOS, SMEO, PBX1, PBX2] The capability to transmit bit streams end-to-end through the network without inserting or deleting any bits in the digital bit stream is a requirement. Switched Data or ISDN shall not employ digital processing to insert transmission losses.

6.17 Switched Digital Bit Error Rate

[Required: TS (trunks only), MFS, EOS, SMEO, PBX1, PBX2] The digital switching system shall not introduce an error into the digital connections that is greater than one error in 109 (one billion) bits averaged over a 9 hour period measured at the DSO rate.

6.18 Encoding And Decoding Levels

[Required: TS (trunks only), MFS, EOS, SMEO, PBX1, PBX2] The DSN uses a fixed loss transmission plan. To provide compatible transmission level interface to other networks, and to accommodate different Transmission Level Point (TLP) reference at analog and digital switching centers, the digital switching center shall provide the capability to selectively set the encoding and decoding levels at the A/D and D/A converters.

6.18.1 DSN Fixed Loss Plan

[Required: TS (trunks only), MFS, EOS, SMEO, PBX1, PBX2] A fixed loss plan provides a coherent means for implementing engineered loss into the digital network. In an all-digital network, it is no longer necessary to compute loss on a trunk-by-trunk basis, as is done in an analog network. Loss assignments on individual digital trunks require either a digital to analog to digital conversion for the use of an analog pad or a digital code conversion within the software of a switching system that implements the desired value of loss. The approach used in the DSN is to provide a fixed end-to-end loss that varies depending on the type of connection (e.g., intra-EOS or EOS to EOS). The end-to-end losses required for the various types of connections are shown in Table 6-14.

Table 6-14. End-to-End Loss

Connection Type	End-to-End Loss
EOS to EOS	
Via MFS	6dB
Via C0I	
≤ 200 miles	3 dB
> 200 miles	6dB
Intra-EOS	0 dB

6.18.1.1 Switch Transmission Level Points (TLPs).

[Required: TS (trunks only), MFS, EOS, SMEO, PBX1, PBX2] To implement the fixed loss plan, each DSN switch shall have a specified TLP reference. A TLP is defined as a point in the transmission system at which the ratio of power of the test signal at that point to the power of the test signal at a reference point is specified. The designated reference point is the zero dB TLP or simply 0 TLP. The standard reference point for the 0 TLP is the outgoing trunk appearance, or transmit side of an end office. The transmission level for an MFS is -3 TLP, where the standard reference point is also on the transmit side of the switch.

SECTION 7 - System Interfaces

7.0 Introduction

This section is an overview of the digital and analog interfaces required in the DSN. The digital interfaces described are applicable to all digital connections associated with the DSN switching system and subsystems. These include access lines to EOS's and PBX switching systems, and any off-network trunk connections or ISTs. The analog interfaces apply to EOS trunks, ISTs, and off-network trunk connections.

7.1 PCM-24 Digital Trunk Interface

[Required: TS, MFS, EOS, SMEO, PBX1, PBX2] DSN switches shall provide a PCM-24 channel digital interface with a 1.544 Mb/s T1 bit stream configured in either the D3/D4 (Super Frame) framing format or the D5 Extended Super Frame (ESF) framing format. D5 is also referred to as Extended Frame (EF). The same framing format shall be used in both directions of transmission. Voice signals shall be encoded in the g-bit Mu (255 quantized values) pulse code modulation (PCM) encoding law. Supervisory and dial pulse (DP) signals shall utilize the A and B bits of the D3/D4 format or the A, B, C, and D bits of the D5 format for pre-CCS7 configurations. Voice channel address in-band signaling shall be provided on individual channels. The D5 format shall be the preferred and system "goal" digital framing format and shall be provided in accordance with MIL-STD- 187-700.

7.1.1 Interface Characteristics

[Required: TS, MFS, EOS, SMEO, PBX1, PBX2] The DSN switching system shall use the DS1 24 channel standard interface as specified in ANSI T1.102, *"Digital Hierarchy – Electrical Interfaces"*. Table 7-l provides the electrical characteristics at the interface and Tables 7-2 and 7-3 provide a listing of the framing characteristics.

Table 7-l. PCM-24 Electrical Interface Characteristics

Nominal Line Rate	1.544 Megabits per second.
Line Rate Accuracy	In a self-timed, free running mode, the line rate accuracy shall be ± 50 bits/s (± 32 parts per million) or better.
Line Code	B8ZS (Bipolar with S-Zero Substitution) Bipolar/Alternate Mark Inversion may be used until Clear Channel Capability is required.
Frame Structure	ESF (D5) or transitionally D3/D4
Medium	One balanced twisted pair shall be used for each direction of transmission.
Pulse Amplitude	The amplitude of an isolated pulse shall be between 2.4 volts and 3.6 volts.
Pulse Shape	The shape of every pulse that approximates an isolated pulse (is preceded by four zeros and followed by one or more zeros) shall conform to the mask in figure Fl O/G703 of ITU-T Recommendation G.703.

Pulse Imbalance	In any window of seventeen consecutive bits, the maximum variation in pulse amplitudes shall be less than 200mV, and the maximum variation in pulse widths (half amplitude) shall be less than 20 ns.
Power Level	For an all-ones signal, the power in a 3 kHz band centered at 772 kHz shall be between 12.6 dBm and 17.9 dBm. The power in a 3 kHz ± 1 kHz band centered at 1544 kHz shall be at least 29 dB below that at 772 kHz.
Jitter	Where one Unit Interval (UI) is equal to 648 ns, the jitter of the signal shall not exceed the following limits, in both bands simultaneously: 1) Band 1 - 5.0 UIs, peak-to-peak, and 2) Band 2 - 0.1 UIs, peak-to-peak. Band 1 equals 10 Hz to 40 kHz. Band 2 equals 8 kHz to 40 kHz.
DC Power	There shall be no dc power applied to the interface.

Table 7-2. PCM-24 D3/D4 Interface Characteristics

Frame Organization	24 8-bit PCM words, plus 1 framing bit, in 125 microseconds.
Channel PCM Word	Frames 1 through 5: 8-bit encoded voice sample.
	Frame 6: 7-bit encoded voice sample; least significant bit is the "A" signaling bit.
	Frames 7 through 11: 8-bit encoded voice sample.
	Frame 12: 7-bit encoded voice sample; least significant bit is the "B" signaling bit.
Channel Sampling Rate	8000 times per second.
Channel Time Slot	5.18 microseconds.
Bit Time Slot	648 nanoseconds.
Framing Bit Pattern	Terminal Framing Bit: "101010" in odd-numbered frames (1, 3, 5, 7, 9, 11).
	Signaling Framing Bit: "001110" in even-numbered frames (2, 4, 6, 8, 10, 12).
Maximum Reframe Time	The DSN will reframe on the average within 50 milliseconds after an error free signal is restored.

Table 7-3. PCM-24 ESF Interface Characteristics	
D5 Extended Super Frame Format Framing Characteristics	
Frame Organization	24 8-bit PCM words, plus 1 framing bit, in 125 microseconds.
Channel PCM Word	Frames 1 through 5: 8-bit encoded voice sample.
	Frame 6: 7-bit encoded voice sample; least significant bit is the "A" signaling bit.
	Frames 7 through 11: 8-bit encoded voice sample.
	Frame 12: 7-bit encoded voice sample; least significant bit is the "B" signaling bit.
	Frames 13 through 17: 8-bit encoded voice sample.
	Frame 18: 7-bit encoded voice sample; least significant bit is the "C" signaling bit.
	Frames 19 through 23: 8-bit encoded voice sample.
	Frame 24: 7-bit encoded voice sample; least significant bit is the "D" signaling bit.
Channel Sampling Rate	8000 times per second.
Channel Time Slot	5.18 microseconds.
Bit Time Slot	648 nanoseconds.
Framing Bit Pattern	Frame and Super Frame Synchronization Bit: 001011 (frames 4, 8, 12, 16, 20, 24).
	CRC Bit (frames 2, 6, 10, 14, 18, 22).
	Data Channel Link Bit (odd numbered frames 1, 3, 5, 7, 9, 11, 13, 15, 17, 19, 21, 23).
Maximum Reframe Time	The DSN will reframe on the average within 50 milliseconds after an error free signal is restored.

7.1.2 Supervisory Channel Associated Signaling

[Required: TS, MFS, EOS, SMEO – Conditional: PBX1, PBX2] On-hook and off-hook status of each channel is transmitted and derived from the coding of the “A” and "B" signaling bits. Trunk seizure, answer supervision, DPs, preemption signals and all other trunk supervisory information shall be sent and received on a per-channel basis using this scheme. Per-trunk signaling in the DSN switching system shall control the value of the “A” and "B" bits to indicate an on-hook (“A” = 0, "B" = 0) or an off-hook (“A” = 1, "B" = 1) condition. When receiving supervisory status on digital trunks using the PCM-24 format, the DSN switching system shall interpret the combination of the “A” bit = 0 and the "B" bit = 0 as on-hook, and the combination “A” bit = 1 and "B" bit = 1 as an off-hook indication. When signaling on VF channels using the PCM-24 format, the least significant bit of each channel, every six frames, shall carry signaling information. Utilizing the four-state signaling option of the Super Frame (D3) format, frame 6 shall contain the “A” channel signaling information and frame 12 shall contain the "B" channel signaling information. The switching system shall also interpret the combination of “A” bit = 1, "B" bit = 0, with bit position 2 in all 24 channels in the Super Frame (D3) format equal to "0" as a channel alarm indication and shall also interpret the combination of “A” bit = 1, "B" bit = 0 as a remote make busy.

In the Extended Super Frame (ESF) format ANSI defines a sixteen-state signaling option that labels the signaling bits “A” (frame 6), "B" (frame 12), "C" (frame 18), and "D" (frame 24). Because DSN does not require the "C" and "D" signaling channels the four-state option shall be used to allow changes in “A” and "B" signaling states to be transmitted twice as often. Utilizing Frames 6 and 18 in the 24-frame Extended Super Frame shall contain the “A” channel signaling information; frames 12 and 24 shall contain the "B" channel signaling information.

7.1.3 Clear Channel Capability (CCC).

[Required: TS, MFS, EOS, SMEO, PBX1 - Conditional: PBX2] DSN switches shall be capable of transmitting and receiving B8ZS line coding in accordance with MIL-STD- 187-700.

7.1.4 Alarm and Restoral Requirements.

[Required: TS, MFS, EOS, SMEO, PBX1 - Conditional: PBX2] The DSN switching system shall provide the alarm and restoral features on the digital interface unit (DIU defined in Table 7-4).

Table 7-4. PCM-24 Alarm and Restoral Requirements

LOCAL ALARM TIMING	The DSN PCM-24 DIU (digital interface unit) will enter the “LOCAL” or “RED” alarm state when it is unable to frame on the received PCM signal, or the received signal is lost, for 2.5 ± 0.5 seconds.
RECEPTION OF REMOTE ALARM	The DSN PCM-24 DIU will detect a “REMOTE” or “YELLOW” alarm condition when bit 2 of all 24 channels of Super Frame is set to a zero and when the “YELLOW’ alarm is sent via the facility data link of Extended Super Frame. Within 35 to 1000 milliseconds after detecting the REMOTE alarm, the DSN switch will: Release all connections on the affected DIU, AND Remove the affected circuits from service.
TRANSMISSION OF REMOTE ALARM	When the DSN PCM-24 DIU enters the LOCAL alarm state, it will send REMOTE alarm toward the connecting equipment by forcing bit 2 to a zero on all 24 channels of Super Frame.
RESTORAL TO SERVICE FROM LOCAL ALARM	Within 15 ± 5 seconds after a valid PCM signal is restored, the DSN DIU will: Remove the REMOTE alarm being sent to the connecting equipment, AND Return the affected circuits to service.
RESTORAL TO SERVICE FROM REMOTE ALARM	Within 20 to 1000 milliseconds after the connecting equipment removes the REMOTE alarm, the DSN switch DIU will restore the affected circuits to service.

7.2 PCM-30 Digital Trunk Interface

[Required: TS, MFS, EOS, SMEO - Conditional: PBX1, PBX2] This requirement only applies to switches implemented in Europe. The DSN switches used in DISN-E shall provide PCM-30 digital interfaces at a data rate of 2.048 Mb/s. The PCM-30 interfaces shall meet the requirements of ITU-T Recommendation *G.703, "Physical/Electrical Characteristics of Hierarchical Digital Interfaces at 1544, 2048, 8448, and 44736 kbit/s Hierarchical Levels"* and ITU-T Recommendation G.732, *"Characteristics of Primary PCM Multiplex Equipment Operating at 2048 kbit/s"*. Voice signals in the PCM-30 framing format shall utilize the A-law encoding technique in accordance with ITU-T Recommendation *G.772* (REV), *"Protected Monitoring Points on Digital Transmission Systems."* The pertinent requirements for the PCM-30 interface are summarized in Table 7-5. Table 7-6 shows the allocation of time slot 16 for channel associated signaling.

Table 7-5. PCM30 Electrical Interface Characteristics

Nominal Line Rate	2.048 Megabits per second.
Line Rate Accuracy	In a self-timed, free running mode, the line rate accuracy shall be ± 102 bits/s (± 50 parts per million) or better.
Line Code	HDB3.
Frame Structure	Frame structure details appear in ITU-T G.704.
Medium	One balanced twisted pair shall be used for each direction of transmission.
Pulse Amplitude	The amplitude of an isolated pulse shall be between 2.2 volts and 3.3 volts.
Pulse Shape	The shape of every pulse that approximates an isolated pulse (is preceded by three zeros and followed by one or more zeros) shall conform to the mask in figure 15/G703 of ITU-T Recommendation G.703.
Pulse Imbalance	The ratio of amplitudes of positive and negative isolated pulses shall be between 0.95 and 1.05.
Power Level	For an all-ones signal, the power in a 3 kHz± 1 kHz band centered at 1.024 MHz shall be between 13.7 dBm and 17.5 dBm. The power in a 3 kHz ± 1 kHz band centered at 2.048 MHz shall be at least 20 dB below that at 1.024 MHz.
Jitter	Where one Unit Interval (UI) is equal to 488 ns, the jitter of the signal shall not exceed the following limits, in both bands simultaneously: 1) Band 1 - 5.0 UIs, peak-to-peak, and 2) Band 2 - 0.1 UIs, peak-to-peak. Band 1 equals 10 Hz to 40 kHz. Band 2 eouals 8 kHz to 40 kHz.
dc Power	There shall be no dc power applied to the interface.
Frame	32 channels (numbered 0 to 3 1) with 8 bits (numbered 1 to 8) per channel.
Organization	PCM words. Frame alignment occupies bit positions 2 through 8 of channel 0, of every other frame.
Multiframe Organization	16 consecutive frames, numbered from 0 to 15.
Channel Sampling Rate	8000 times per second.
Channel PCM Word	Channel time slots 1 to 15, and 17 to 31, are assigned to telephone channels 1 to 30.
Channel Time Slot	3.9 1 microseconds.
Tolerance	± 50 ppm on line rate of 1.544 megabits per second.

Bit Time Slot	488 nanoseconds.
Framing Bit Pattern	Bits 2 through 8 of channel 0, every other frame, contains the “0011011” frame alignment signal. To avoid falsely locking to the data contained in channel 0 for frames not containing the frame alignment signal, bit 2 of channel 0 is always a "1" in those frames.
Multiframe Alignment	The multiframe alignment signal is “0000” and occupies digit time slots 1 to 4 of channel time slot 16 in frame 0.
Framing Strategy	Frame alignment is assumed to be lost if 3 of 4 consecutive frame alignment signals are received with an error.
Reframing Algorithm	Frame alignment is assumed to be recovered if the next frame has a "1" in bit 2 of channel 0 and valid framing is present in the frame after that.
Multiframe Loss and Recovery	Multiframe alignment is assumed to be lost when two consecutive multiframe alignment signals are received in error. Multiframe alignment is assumed to be restored when the first correct multiframe alignment signal is detected.

Table 7-6. Allocation Of Time Slot 16

Channel time slot 16 of frame 0	Channel time slot 16 of frame 1		Channel time slot 16 of frame 2		. . . . .	Channel time slot 16 of frame 15	
0000 xyxx	ABCD Channel 1	ABCD Channel 16	ABCD Channel 2	ABCD Channel 17		ABCD Channel 15	ABCD Channel 30
Note: x = spare bit to be made 1 if not used. y = bit used to indicate loss of multiframe alignment (REMOTE alarm).							
When bits B, C, or D are not used they shall have the value: B = 1 c = o D = 1							
The combination 0000 of bits A, B, C, and D shall not be used for signaling purposes for channels l-15.							

7.2.1 Supervisory Channel Associated Signaling

[Required: TS, MFS, EOS, SMEO - Conditional: PBX1, PBX2] When receiving supervisory status on digital trunks using the PCM-30 format, the DSN switching system shall interpret the combination of the “A” signaling channel bit = 1 and the "B" signaling channel bit = 1 as on-hook, and shall interpret the combination of the “A” signaling channel bit = 0 and the "B" signaling channel bit = 1 as an off-hook indication. The DSN switching system shall also interpret the combination of “A” bit = 1 and "B" bit = 0 as a channel alarm indication and a remote make busy. Bits "C" and "D" are not used in the DSN for signaling or control and therefore shall be set to the values "C" = 0 and "D" =1 in accordance with ITU-T Recommendation G.704.

7.2.2 Alarm and Restoral Requirements

[Required: TS, MFS, EOS, SMEO - Conditional: PBX1, PBX2] The DSN switching system shall provide the alarm and restoral features shown in Table 7-7.

Table 7-7. PCM30 Alarm And Restoral Requirements

LOCAL ALARM TIMING	The DSN PCM-30 DIU shall enter the "LOCAL" or "RED" alarm state when framing is lost, or the incoming signal is lost, for 4.5 ± 0.5 seconds.
RECEPTION OF REMOTE ALARM	The DSN PCM-30 DIU shall detect a 'REMOTE" or "YELLOW" alarm condition when bit 3 of channel time slot 0 in those frames not containing the frame alignment signal is set to a "1," and will interpret this transition as a remote alarm from the connecting equipment. Within 35 to 1000 ms after detecting the REMOTE alarm, the DSN switch will: Release all connections on the affected DIU, AND Remove the affected circuits from service.
TRANSMISSION OF REMOTE ALARM	When the DSN PCM-30 DIU enters the LOCAL alarm state, it shall send within 2 ms a REMOTE alarm toward the connecting equipment by changing bit 3 channel time slot 0 from a "0" to a "1" in those frames not containing the frame alignment signal.
RESTORAL TO SERVICE FROM LOCAL ALARM	Within 15 ± 5 seconds after a valid PCM signal is restored, the DSN switch shall: Remove the REMOTE alarm being sent to the connecting equipment, AND Return the affected circuits to service.
RESTORAL TO SERVICE FROM REMOTE ALARM	Within 20 to 1000 ms after the connecting equipment removes the REMOTE alarm, the DSN switch shall restore the affected circuits to service.

7.3 Interoperation of PCM-24 and PCM-30 Systems

[Required: TS, MFS, EOS, SMEO - Conditional: PBX1, PBX2] Interoperation of PCM-24 and PCM-30 transmission shall occur internal to DSN switching equipment. The internal architecture of the DSN switch shall perform the required A-law-to-Mu-law conversions necessary to switch or cross-connect time slot data, regardless of the source. The conversion shall be accomplished in accordance with ITU-T Recommendation *G.7* 11, *"Pulse Code Modulation (PCM) of Voice Frequencies – General Aspects of Digital Transmission Systems."*

7.4 Analog Trunk Interface

[Conditional: TS, MFS, EOS, SMEO, PBX1, PBX2] The DSN switching system shall provide analog trunk circuits that interface to industry standard signaling and facility arrangements.

7.4.1 E&M Trunk Circuits

[Conditional: TS, MFS, EOS, SMEO, PBX1, PBX2] The DSN switching system shall interface with exchange carriers using industry standard E&M signaling. The switching system shall

interface with Type I and Type II E&M signaling in accordance with Paragraph 9 and subparagraphs of GR-506-CORE. The switching system shall interface with Type V E&M signaling as defined in Paragraphs 6.8.5, 6.8.6, 6.8.7.2, 6.8.8.2, and 6.8.8.3 of Telcordia Technologies Document SR-2275. The DSN switch analog trunk interface shall always originate on the M-lead.

7.4.2 Single Frequency (SF) Trunk Circuits

[Conditional: TS, MFS, EOS, SMEO, PBX1, PBX2] The DSN will interface with external SF equipment using a four-wire E&M trunk circuit, either Type I or II. DSN in-band signaling equipment utilizing SF will place a 2600 Hz tone on the circuit to indicate the idle state (on-hook) and the tone will be removed from the circuit to indicate the busy state (off-hook). Signaling states will be conveyed via E and M leads (Type I or II) to the telephone equipment terminating the circuit on the equipment side of the interface. The SF trunk interface consists of only the voice path conductors (T, R, T1, R1), but at a point between this transmission facility interface and the switching function the SF signal will be translated back to the two-state dc signals.

7.4.3 Dual Frequency (DF) Trunk Circuits

[Conditional: TS, MFS, EOS, SMEO, PBX1, PBX2] The Dual Frequency Signaling Unit (DFSU) equipment used in the DSN operates in much the same way as an SF unit, except that whenever the 2600 Hz tone is removed from the circuit a 2800 Hz tone is applied for a short period (175 ms maximum). The 2800 Hz tone burst will serve as a confirmation tone; the receiving signaling unit will only transition from on-hook to off-hook if the loss of the 2600 Hz tone is followed by the 2800 Hz tone. This prevents false on-hook to off-hook transitions from occurring due to a break in the communications circuit. Like the SF trunk interface, the DF trunk interface will consist of only the voice path conductors (T, R, T1, R1). The DSN switch shall interface an external DFSU using a four-wire E&M trunk circuit with Type I or II E&M signaling. This connection is on the equipment-side of a DF trunk interface.

7.5 Integrated Digital Loop Carrier (IDLC)

[Required: TS, MFS, EOS - Conditional: SMEO, PBX1, PBX2] The DSN switching system shall interface with IDLC equipment in accordance withTelcordia Technologies GR-303-CORE, System Generic Requirements, Objectives, and Interface, December 2000, Issue 4. The DSN switching system shall provide the capability to handle external carrier systems/equipment alarm indications from the carrier systems/equipment using the E-telemetry interface (scan points) at the DSO, DS1, and OC3 rates, and, comply to the Telcordia Technologies GR-303-CORE, System Generic Requirements, Objectives, and Interface, December 2000, Issue 4 and Telcordia Technologies TR-NWT-000057 that specifies the use of an COT-generated DC contact closure alarm to indicate an “all-accessible-channels-busy“ condition.

The DSN switch when interfaced to carrier systems/equipment that provides an E-telemetry interface type (scan points) for alarm management shall be capable of E-telemetry management that is used to minimize the effects of carrier failures on switching systems and on service. E-telemetry scan point (binary condition i.e., “closed” contact for active and “opened” for inactive states) when

"closed" should busy out the failed circuits, release customers from the failed circuits, and prevent the failed circuits from seizing the DSN trunk equipment and prevent the DSN switch from seizing the failed circuits.

7.5.1 E-Telemetry Scan Point System Operation

[Required: TS, MFS, EOS - Conditional: SMEO, PBX1, PBX2]

The DSN E-telemetry System Operation shall be divided into three parts, i.e., detection of the carrier alarm, conditioning the alarmed trunk, and reaction of the switching equipment to the processing of the alarm. Requirements for E-telemetry scan point are:

a. Sense Point Interface. The switching system shall provide sense points to which external carrier systems/equipment can be interfaced to, so that alarm of the carrier equipment shall cause the idle trunks to be removed from service.

b. Call Processing Actions. Receipt of an external carrier systems/equipment alarm shall cause additional call processing to be aborted on associated trunks that are not in the talking state.

c. Trunk Conditioning. Receipt of an external carrier systems/equipment alarm shall cause the following actions on the affected trunks:

1. Idle trunks shall be removed from the idle list. Subsequent calls for service must be ignored for the duration of the external carrier systems/equipment alarm. Busy-back shall be returned on those incoming trunks which are optioned for busy-back while in the out-of-service state and proper MLPP treatment shall be applied.

2. Trunks in the talking state shall be monitored for disconnect, after which they are to be placed in the same state as described above for idle trunks.

d. Restoration of Service. All trunks affected shall be returned to their previous state after the external carrier systems/equipment alarm is removed.

SECTION 8 - Tandem Switching

8.0 Introduction

[Required: TS, MFS] This section contains the tandem switching requirements for DSN Multifunction Switches (MFS) and Tandem Switches (TS). It is based on *the Telcordia Technologies LSSGR: Tandem Supplement* (GR-540-CORE), Issue 2, March 1999. The requirements in this section apply to systems using existing analog or digital technology. LSSGR Features and capabilities which require modification for use in the DSN are described as are Military Unique Features.

8.1 Network Plan

[Required: TS, MFS] Tandem switching systems provide a means of routing traffic in an orderly manner and make economic use of trunks and switching equipment, where otherwise, many small separate trunk groups would be necessary. The switch performs trunk-to-trunk switching for the purpose of concentrating traffic for the centralization of services.

8.2 System Architecture

The switching system architecture is largely a function of technology. DSN switching systems are digital and interface with both digital and analog access lines and trunks. The DSN architecture is described in Section 1 of this GSCR.

8.3 Tandem Capabilities

[Required: TS, MFS] DSN switching systems requiring tandem switching features and functions shall provide the features and functions shown in Table 8-1 and defined in the *Telcordia Technologies LSSGR: Tandem Supplement* (GR-540-CORE), Issue 2, March 1999, paragraph 4.1. LSSGR features not shown in Table 8-1 are not required.

Table 8-1. Tandem Features

Feature Definition #	Description	GR-540-CORE Section
60-00-0000	**Tandem Features**	**Section 4.2.1**
60-01-0000	**Access Tandem Office Trunks**	**Section 4.2.2**
60-01-0100	Tandem Connecting Trunks	Section 4.2.3
60-01-0101	DDD Access (DD) Trunks	Section 4.2.3.1
60-01-0104	Tandem Completing (TC) Trunks	Section 4.2.3.3
60-01-0106	Two-way Tandem connecting Trunks (Not Coded)	Section 4.2.3.4
60-O l-0200	Intertandem Trunks	Section 4.2.4
60-01—0500	Special Service Trunks	Section 4.2.5
60-O l-050 l	Direct Inward Dial (DID)	Section 4.2.5.1
60-02-0000	**Call Processing Features**	**Section 4.2.6**
60-02-o 100	Trunk-to-Trunk Test Connections	Section 4.2.6.1
60-02-0200	3-Digit Translation	Section 4.2.6.2
60-02-0202	NXX Office and Special Purpose Codes	Section 4.2.6.3
60-02-0203	NXX Area Codes	Section 4.2.6.2
60-02-0300	6-Digit Translation	Section 4.2.6.2
60-02-0400	Digit Deletion	Section 4.2.6.3
60-02-0500	Digit Prefixing	Section 4.2.6.3
60-02-0600	Code Conversion	Section 4.2.6.3
60-02-0900	Capability for Satellite Connections	Section 4.2.6.5
60-02- 1000	Recorded Announcement Service (Tandem)	Section 4.2.6.6
60-02-l 100	Overlap Outpulsing	Section 4.2.6.7

Table 8-l. Tandem Features (continued)

Feature Definition #	Description	GR-540-CORE Section
60-02-1200	Vacant Code Screening	Section 4.2.6.8
60-02-1300	Trunk Class Screening	Section 4.2.6.9
60-03-0000	**Tandem Signaling**	**Section 4.2.7**
60-03-0100	Common Channel Signaling	Section 4.2.7.1
60-03-0200	Inband Trunk Signaling (Tandem)	Section 4.2.7.2
60-04-0000	**Line and Trunk Test Features**	**Section 4.2.8**
60-04-o 100	Test Lines	Section 4.2.8.1
60-04-o 10 1	All 1 OX-Type Test Lines Used on End Offices	Section 4.2.8.1.1
60-04-0102	103-Type Tests Line	Section 4.2.8.1.2
60-04-o 103	1 04-Type Tests Line	Section 4.2.8.1.3
60-04-o 104	1 08-Type Tests Line	Section 4.2.8.1.4
60-04-o 105	109-Type Tests Line	Section 4.2.8.1.5
60-04-0200	Multiple Trunk Test Capability	Section 4.2.8.2
60-04-0600	FX Line for ROTL in Tandem Offices	Section 4.2.8.3
60-04-0700	Two-way Trunk Maintenance	Section 4.2.8.4
60-04-0900	Continuity Check of the SWITCH Voice Path	Section 4.2.8.5
60-05-0000	**Network Management Features**	**Section 4.2.9**
60-05-o 102	Trunk Reservation	Section 4.2.9.1.1
60-05-o 105	Automatic Out-of-Chain Routing	Section 4.2.9.1.2
60-05-0200	Manual Network Management Controls	Section 4.2.9.1.3
60-05-020 1	Code Controls	Section 4.2.9.1.4
60-05-0202	Trunk Group Controls	Section 4.2.9.1.5
60-05-0203	Administration of Hard-to-Reach Codes	Section 4.2.9.1.6
60-05-0300	Network Management Surveillance Data	Section 4.2.9.1.7
60-05-0400	NTM OS/NE Interface	Section 4.2.9.1.8
60-05-040 1	NM Audits and Alerts	Section 4.2.9.1.9

Table 8-l. Tandem Features (continued)

Feature Definition #	Description	GR-540-CORE Section
60-05-0402	Message Administration	Section 4.2.9.1.10
60-05-0500	Backup Network Management Capabilities	Section 4.2.9.1 .1 1
60-05-0600	Trunk Directionalization	Section4.2.9.1.12
60-06-0000	Billing	Section 4.2.10
60- 1 O-0200	Echo Cancelers	Section 4.2.12

8.4 Call Processing

[Required: TS, MFS] DSN switching systems which require tandem features and capabilities shall meet the call processing requirements in the *Telcordia Technologies LSSGR: Tandem Supplement* (GR-540-CORE), Issue 2, March 1999, Paragraph 5 and all its subparagraphs. In addition, tandem switching systems shall meet the call processing requirements in Section 4 of this GSCR.

8.5 Signaling

[Required: TS, MFS] DSN switching systems which require tandem features and capabilities shall meet the signaling requirements Section 5 of this GSCR.

8.6 Transmission

[Required: TS, MFS] DSN switching systems which require tandem features and capabilities shall meet the transmission requirements in Section 6 of this document.

8.7 Measurements and Administration

[Required: TS, MFS] DSN switching systems with tandem functions and capabilities shall meet the switching system maintenance, circuit and facility maintenance, and maintenance measurement requirements in the *Telcordia Technologies LSSGR: Tandem Supplement* (GR-540-CORE), Issue 2, March 1999, paragraph 9 and all its subparagraphs and Sections 7 & 8 of this GSCR. Centralized Automatic Message Accounting (CAMA) shall not be required.

8.8 Service Standards

[Required: TS, MFS] DSN switching systems with tandem features and capabilities shall meet the service standards in the *Telcordia Technologies LSSGR: Tandem Supplement* (GR-540-CORE),

Issue 2, March 1999, Chapter 11 with the exception of CAMA. In addition, DSN tandem switching systems shall provide non-blocking service.

8.9 Network Management (NM)

[Required: TS, MFS] DSN switching systems with tandem features and capabilities shall meet the network management requirements specified in Section 9 of this GSCR.

SECTION 9 - Network Management

9.0 Introduction

DISA has developed a network management system to monitor and control the Global Defense Switched Network (DSN). This system, the Advanced DSN Integrated management Support System (ADIMSS), is fielded and operational. It was developed by drawing upon the framework setup by the LSSGR for telephone switch management within the public telephone system network. However, DISA realizes that many of the switching systems being deployed in the DSN today were neither intended nor designed to function as part of the public telephone network infrastructure. Therefore, DISA developed the requirements in this section to specifically address the Network Management (NM) requirements of telephone switches to be used within the DSN.

The NM functions covered in this section are:

- Fault Management
- Configuration Management
- Accounting Management
- Performance Management
- Network Management Controls
- Remote Access to the switch

9.1 DISA/DSN Network Management

[Required: TS, EO, SMEO, MFS] DSN switching systems shall provide DSN NM data to the DISA ADIMSS via one of the three following physical interfaces:

- Ethernet/TCP/IP (IEEE 802.3)
- Serial (RS-232)/Asynchronous
- Serial/Synchronous (X.25 and/or BX.25 variant)

All data that is collected shall be accessible through these interfaces. For DSN Network Management purposes the telephone switch must provide four separate data channels. They may be physically separate (e.g., four distinct physical interface points) or logically separate (e.g., four user sessions through a single Ethernet interface). The data may be sent in ascii, binary, or hexadecimal data or ascii text designed for screen/printer display.

The data channels shall be used for and, as such, must be capable of providing:

- Alarm/Log Data
- Performance Data (e.g., traffic data)

- Accounting Data (e.g., Call Detail Recording)
- Switch access (to perform switch data fill administration and network controls)

9.2 Measurements and Data Generation

This section contains the Measurements and data generation requirements that shall be collected by DSN switching systems. The measurements and data collected are used to maintain, manage, and engineer the DSN.

9.2.1 Common Data Requirements

9.2.1.1 Data Oualitv

[Required: TS, MFS, EOS, SMEO] DSN switching systems shall meet the data quality and data presentation requirements in Telcordia Technologies Generic Requirements, GR-47%CORE, Issue 4, February 2000, Section 2, paragraphs 2.3 and 2.4. The SMEO is not required to meet the 30 second and 5 minute Traffic Data Reporting Requirements in GR-47%CORE, paragraph 2.4.1, Table 2- 1. However, SMEOs shall meet the 15 or 30 or 60 minute, and daily reporting requirements.

9.2.2 Circuit Switched Network Measurements

9.2.2.1 Basic Switch Performance

DSN switching systems shall meet the following switch performance requirements in Telcordia Technologies Generic Requirements, GR-478-CORE, Issue 4, February 2000, Section 3.1.

9.2.2.1.1 Traffic Measurements

[Required: TS, MFS, EOS] DSN switching systems shall meet the traffic measurement requirements in Telcordia Technologies Generic Requirements, GR-47%CORE, Issue 4, February 2000, Section 3, Paragraph 3.1.1.

[Required: SMEO] DSN switching systems shall provide traffic measurements for the following:

- Provide the required Traffic NM data in either 5, 15, 30 or 60 min increments
- Trunk Group Number
- Trunks Equipped
- Outgoing Attempts
- Outgoing Overflows
- Trunk Group Usage (in seconds or hundred call seconds (CCS))
- Total Trunk Group Usage or Outgoing and Incoming Trunk Group Usage
- Switch Database Access

9.2.2.1.2 Reference Data

[Required: TS, MFS, EOS - Conditional: SMEO] DSN switching systems shall meet the reference data optional requirements in Telcordia Technologies Generic Requirements, GR-478-CORE, Issue 4, February 2000, Section 3, Paragraph 3.1.3.

9.2.2.2 Line Servicing

[Required: TS, MFS, EOS – Conditional: SMEO] DSN switching systems shall meet the line servicing requirements in Telcordia Technologies Generic Requirements, GR-478-CORE, Issue 4, February 2000, Section 3.2.

9.2.2.3 Trunk Groups

[Required: TS, MFS, EOS - Conditional: SMEO] DSN switching systems shall meet the trunk group requirements in Telcordia Technologies Generic Requirements, GR-478-CORE, Issue 4, February 2000, Section 3.3.

9.2.2.4 Call Processor

[Required: TS, MFS, EOS - Conditional: SMEO] DSN switching systems shall meet the call processor requirements in Telcordia Technologies Generic Requirements, GR-47%CORE, Issue 4, February 2000, Section 3.4.

9.2.2.5 Switch Services

[Required: TS, MFS, EOS - Conditional: SMEO] DSN switching systems shall meet the switch service requirements in Telcordia Technologies Generic Requirements, GR-478-CORE, Issue 4, February 2000, Section 3.5.

9.2.2.6 Special Studies

[Required: TS, MFS, EOS - Conditional: SMEO] DSN switching systems shall meet the special studies requirements in Telcordia Technologies Generic Requirements, GR-47%CORE, Issue 4, February 2000, Section 3.6. Requirements referring to ISDN are optional for SMEO switches.

9.2.2.7 Remote Switching Site

[Conditional: MFS, EOS, SMEO] DSN switching systems which support remote switching sites shall meet the remote switching site traffic and reference data requirements in Telcordia Technologies Generic Requirements, GR-47%CORE, Issue 4, February 2000, Section 3.7, paragraphs 3.7.1 and 3.7.2.

9.2.2.8 Features

[Conditional: MFS, EOS, SMEO] DSN switches shall meet the traffic data requirements for features. Descriptions of the requirements are found in Telcordia Technologies Generic Requirements, GR-478-CORE, Issue 4, February 2000, Section 3.10.

9.2.3 Common Channel Signaling Network (CCSN) Measurements

[Required: TS, EOS, MFS - Conditional: SMEO] DSN switching systems shall meet the CCSN measurement requirements in Telcordia Technologies Generic Requirements, GR-47%CORE, Issue 4, February 2000, Section 4.

9.2.4 ISDN Measurements

[Required: TS, MFS, EOS, SMEO] DSN switching systems providing ISDN services shall meet the ISDN measurement requirements in Telcordia Technologies Generic Requirements, GR-478-CORE, Issue 4, February 2000, Section 6.

9.2.5 Traffic Capacity

[Required: MFS, TS, EOS, SMEO] Requirements for Traffic Capacity shall be in accordance with Telcordia Technologies GR-5 17-CORE, Issue 1, December *1998, Traffic Capacity and Environment*

9.3 Fault Management

[Required: TS, EOS, SMEO, MFS] DSN Telephone switching systems shall detect fault (alarm) conditions and generate alarm notifications. The alarm messages must be sent to the assigned NM Alarm channel in near-real time. No alarm restriction/filtering is necessary. In addition to the data formats in paragraph 9.1, alarms may be sent as Simple Network Management Network Protocol (SNMP) traps.

If this channel is also used to output switch administrative log information, the alarm messages must be distinguishable from an administrative log message.

9.4 Configuration Management (CM)

[Required: TS, MFS, EOS, SMEO] Requirements for this feature shall be in accordance with Telcordia Technologies GR-472-CORE, *Network Element Configuration Management,* Revision 2, Feb. 1999, Section 4.

9.5 Automated Message Accounting (AMA)

The Automated Message Accounting (AMA) process in a switching system provides usage related data to perform customer billing and call detail recording (CDR).

9.5.1 DSN CDR Fields

[Required: EOS, SMEO, MFS] The data fields for DSN Call Detail Recording shall be as shown in Table 9-l. These requirements fall into one of two categories:

- "R" = REQUIRED: feature/function required and must adhere to the specific GSCR requirements
- "NR" = NOT REQUIRED: feature/function not required.

Table 9-l. Call Detail Recording Data

MFS	EOS	SMEO	DESCRIPTION
R	R	R	The telephone switching system must be able to generate call accounting information, Call Detail Recording (CDR). The call accounting information must be able to be sent to the NM CDR channel when requested by the NM system
R	R	R	The CDRs can be provided in any format, but must, as a minimum, contain the data elements listed below.
R	R	R	1) Start Date of Call (In Julian or Calendar)
R	R	R	2) Start Time of Call (Hour + Minute + Second)
R	R	R	3) Either (or both) a) Elapsed Time of Call b) Stop Time of Call
R	R	R	4) Calling Number
R	R	R	5) Called Number (must include all dialed digits)
R	R	R	6) Precedence Level of Call (Note: this may be accomplished by either a specific precedence level designation field in the call record or by providing the dialed precedence level access digits in the called number field.)
R	R	R	7) Outgoing Trunk Group of the call
R	R	R	8) Outgoing Trunk Group member of the call
R	R	NR	9) Incoming Trunk Group of the call
R	R	NR	10) Incoming Trunk Group Member of the call
R	R	NR	11) Call Answered/Unanswered Indicator
R	R	NR	12) Conference Call Indicator
R	R	NR	13) Customer/Business Group Identification

9.5.2 CDR Data Retention

[Required: EOS, MFS – Conditional: SMEO] DSN switching systems shall have internal storage capacity to store a minimum of 5 days of Call Detail Recording (CDR) data.

9.6 Performance Management

[Required/Conditional: EOS, MFS, SMEO] Table 9-2 contains the minimum DSN switch performance data requirements. These requirements fall into one of three categories:

1. "R" – REQUIRED: feature/function required in a candidate switch. Must adhere to the specific GSCR requirements.

2. "R/NC" - REQUIRED – NOT CRITICAL feature/function is required. However, the fact that a specific switch cannot provide a specific feature/function does not necessarily mean it can't obtain a waiver from DISA to operate in the DSN. E.G. if a particular switch cannot provide traffic measurements, DISA may elect to waive that requirement.

3. "0" - OPTIONAL: feature/function is optional. However, if the feature/function is provided, it must adhere to the specific GSCR requirements -- if the GSCR is applicable.

Note: Where applicable, the requirements for the performance measurements shall be in accordance with Telcordia Technologies GR-47%CORE, *Measurements and Data Generation*, Issue 4, Feb. 2000, Section 3.3. Reference to the specific Telcordia Requirement [R], Objective [0], or Conditional Requirement [CR] are shown in the Requirements column of Table 9-2.

Table 9-2. Performance Management Data

REQUIREMENT	TS/ MFS	EO	SMEO	DESCRIPTION
	R	R	R	The telephone switching system shall be able to generate switch performance measurement data. The performance measurement data must sent to the assigned NM traffic channel. Ideally, the performance measurement data is polled by the NM system, but, with DISA approval, the performance measurement data may be periodically (automatically) sent to the NM system. Performance measurement reporting intervals are typically placed in two categories; those supporting the near real time network management function and those supporting the off-line network performance assessment function.

NM R2-19	R	R	R	Polling Increments The MFS and EO must be able to provide the required NM data in either 5 or 15 minute increments. Those data fields marked with "NM" in the Requirements column must be provided in either 5 or 15 minute intervals. The other data fields must be provided in accordance with the "R", "R/NC", "O" marking, but may be provided in 5, 15, 30, or 60 minute intervals. The SMEO must be able to provide the required NM data. The SMEO may provide this data in either 5 or 15 or 30 or 60-minute increments.
				As a minimum, the DSN switch must be able to produce the following performance measurements:
NM O3-237[233]	R	R	R	1) Trunk Group Number
NM O3-244[240]	R	R	0	2) Trunk Group Far End CLLI
NM O3-246[242]	R	R	R	3) Trunks Equipped
	R/NC	R/NC	0	4) Trunks In Service
NM R3-203[219]	R	R	R	5) Outgoing Attempts
NM R3-204[220]	R	R	R	6) Outgoing Overflows
NM R3-202[218]	R	R	R	7) Incoming Attempts
NM R3-205[221]	R	R	R	8) Trunk Group Usage (in seconds or CCS) a) Total Trunk Group Usage or b) Outgoing Trunk Group Usage & Incoming Trunk Group Usage
R3-206[222]	R	R	R/NC	9) Maintenance Usage (in seconds or CCS)
R3-25[57]	R	0	0	10) Tandem Call Count
R3-217[1331]	R	R	0	11) Glare

By Trunk Group. The number of times outgoing calls failed due to problems such as seizure failures, signaling problems, or other outgoing failures.	0	0	0	12) Outgoing Failures
By Trunk Group. The number of times an actual (or apparent) incoming call failed.	0	0	0	13) Incoming Failures
By Trunk Group. The number of times a call incoming from either a line or incoming trunk fails to find an internal switch path to an outgoing trunk group.	0	0	0	14) Out Match Fail
CR3-230[1344]	R/NC	R/NC	0	15) Trunk Group Preemption Failure
CR3-231[1345]	R/NC	R/NC	0	16) Incoming Calls Preempted
CR3-232[1346]	R/NC	R/NC	O	17) Outgoing Calls Preempted
CR3-233[1347]	R/NC	R/NC	0	18) Incoming Precedence Calls Preempted
CR3-234[1348]	R/NC	R/NC	0	19) Outgoing Precedence Calls Preempted

9.7 Network Management Controls

DSN switches shall provide protective, expansive, automatic and manual controls in the network switching elements.

9.7.1 Automatic Controls

[Required: TS, EOS, MFS -- Conditional: SMEO] Automatic controls are network management controls that are automatically applied by the network switching elements (NSE) when they recognize a problem due to a shortage in call processing or call carrying resources. These automatic controls, which are programmed into the switching element and triggered by the changing switching system and trunk group congestion, keep the message network working efficiently during

periods of overload. Both the predetermined condition (threshold) and the required response (action to be taken automatically) are contained in the database of each NSE. These automatic controls shall consist of *Automatic Congestion Controls (ACC), Trunk Reservation (TRE)*, and *Selective Incoming Load Controls (SILC).* There are two types of automatic controls: protective and expansive. Protective controls can be used to inhibit the spread of congestion in the network by restricting normal trunk group access and overflow (trunk group controls) or by limiting the attempts on selected destination or signaling codes (code controls). Expansive controls are used to expand routing beyond the normal in-chain routes when in-chain routes are busy or have failed and there exists idle capacity in out-of-chain routes.

9.7.1.1. Automatic Congestion Controls (ACC)

[Required: TS, EOS, MFS – Conditional: SMEO] ACC provides a congested switching system with the capability to use Signaling System 7 (SS7) to notify linked switches of its level of congestion. The linked switching systems can then reduce the traffic offered to the congested switch. Controls such as this can significantly increase the throughput of completed calls through a network during periods of overload. ACC detects and responds to two levels of switching congestion (i.e., CL1 and CL2). ACC has two components:

1. Detection and Transmission of congestion status
2. Reception and Response to congestion status.

Refer to GR-477-CORE, Section 4.3.1, for a detailed description of ACC.

9.7.1.2. Trunk Reservation (TRE)

[Required: TS, EOS, MFS – Conditional: SMEO] TRE is an automatic trunk group control that allows the network manager to reserve a number of trunks for a desired type of traffic. Two adjustable "reservation levels" (RL1 and RL2) are defined for this control and the number of trunks reserved can vary from 0 - 15. When the number of idle outgoing trunks is less than or equal to RL 1, then a pre-selected control affects calls on the trunk group until the number of idle trunks exceeds RL1 . This same scheme is used for RL2 but the control is generally more severe. In setting up trunk reservation on a trunk group, the network manager selects the following options:

- Reservation Levels (RL1 and RL2)
- Response Category (A through E)
- Control Action (skip or cancel)

Refer to GR-477-CORE, Section 4.3.2, for a detailed description of TRE.

9.7.1.3. Selective Incoming Load Controls (SILC)

[Required: TS, EOS, MFS – Conditional: SMEO] SILC is a control that, when activated on a trunk group, causes the incoming calls on that trunk group to be ignored by the receiving switch or sent to a disposition. SILC is intended as a substitute for ACC, therefore, would only be used by

switches that are not using SS7 signaling. This control allows a network manager to select trunk groups to be controlled in an office when the office itself (not one connected to it) encounters congestion levels 1 and 2. Activation is intended to occur at the same time that ACC signals are being transmitted from the office. The inhibiting of the transmission of ACC signals will also inhibit the activation of SILC. The percentages or gap rates for each congestion level are either generically defined or they can be modified via a recent change message in the network switching center. The network manager also has the option of putting up to 128 trunk groups on the SILC list for activation in congestion level.

Refer to GR-477-CORE, Section 5.3.4, for a detailed description of SILC.

9.7.1.4. Precedence Access Threshold (PAT)

[Conditional: MFS] The PAT control limits the number of simultaneous calls originated by selected user stations, attendant positions, and other designated switch terminations whose traffic input into the DSN requires screening. Each precedence access threshold will set an upper limit on the number of simultaneous calls that are allowed to enter the DSN by precedence level and calling area. There will be separate precedence access threshold settings established for each combination of precedence level and calling area. This control will allow five precedence levels (Routine, Priority, Immediate, Flash, and Flash Override) and five progressively wider calling areas (Al, A2, A3, A4, and A5). Additional requirements and a detailed description of PAT can be found in Section 2.11.1.

9.7.2 Overload Controls

9.7.2.1. Essential Service Protection (ESP)

[Required: TS, EOS, MFS – Conditional: SMEO] A DSN switch shall be capable of giving preference for originating service to a limited number of stations during emergencies. This feature is aimed at ensuring that a small number of lines designated as "essential" by the government receive priority originating service during periods of extreme overloads. Service to other lines should be equitably distributed when ESP is activated. The ESP feature is manually enabled and disabled. ESP is automatically activated, if previously enabled, when the system detects that service has been significantly degraded. The switch shall return to normal processing when the original condition returns to a normal condition. Each switch shall have the capability to classmark up to 15 percent of the station lines for this service.

Refer to GR-741-CORE, Section 3.5.4.2.D.2, for a description of ESP.

9.7.3 Manual Controls

[Required: TS, EOS, MFS – Conditional: SMEO] Manual network management controls are those controls that are implemented by the personnel at a Network Management Center (NMC). Manual controls supplement the automatic controls and are used to handle the network problems that require flexibility and human judgment. Often the network manager uses manual controls to

utilize less congested areas of the network to relieve the pressure in overloaded sections and fully utilize the capacity of the network. There are two types of manual controls: protective and expansive. Protective controls can be used to inhibit the spread of congestion in the network by restricting normal trunk group access and overflow (trunk group controls) or by limiting the attempts on selected destination or signaling codes (code controls). Expansive controls are used to expand routing beyond the normal in-chain routes when‘in-chain routes are busy or have failed and there exists idle capacity in out-of-chain routes. If the characteristics of the particular call meet the criteria for the type of traffic to be affected, it will be subjected to the control. For trunk group controls, pre selections are made from the route options listed below. The route options involve trunk groups, and since code controls affect a call before it is offered to a trunk group, route options are irrelevant to code controls. The following options listed below are traffic characteristic options that can be pre selected.

9.7.3.1 Trunk Group Controls

[Required: TS, EOS, MFS – Conditional: SMEO] DSN switching elements require both protective and expansive manual trunk group (TG) controls. The protective controls (CANF, CANT, and SKIP) are those that block traffic from using a trunk group, while expansive controls (RR) allow other ways for traffic to complete via identified trunk groups. ***The application of any TG control shall not prevent precedence calls from performing a preemptive search on all of the TG's that were previously friendly searched.*** The options on the protective controls include independent direct routed and alternate routed percentages (not by gap rates) and announcement selection (NCA, EA1 , or EA2 for CANF, and CANT). The disposition of calls controlled by SKIP is to the next in-chain trunk group or to NCA if the controlled trunk group is a final group. The expansive trunk group control (i.e., Reroute [RR]) extends call routing to trunk groups beyond the normal call routing hierarchy in those cases where the original route has congestion or fails, and spare call capacity exists on the receiving trunk group.

9.7.3.1.1 Cancel From (CANF)

[Required: TS, EOS, MFS – Conditional: SMEO] CANF is a protective, post hunt trunk group (TG) control. The main function of this control is to cancel traffic overflowing from a TG to the next in control only if the characteristics of the call meet the options that have been preselected for CANF. FLASH and FLASH OVERRIDE calls shall be exempted from this control.

Refer to GR-477-CORE, R6-9, for a detailed description of CANF.

9.7.3.1.2 Cancel To (CANT)

[Required: TS, EOS, MFS – Conditional: SMEO] CANT is a protective, pre hunt trunk group (TG) control that cancels the affected traffic offered to a TG. A call is affected by this control only if the characteristics of the call meet the options that have been preselected by the network controller. FLASH and FLASH OVERRIDE calls shall be exempted from this control.

Refer to GR-477-CORE, R6-9, for a detailed description of CANT.

9.7.3.1.3 SKIP

[Required: TS, EOS, MFS – Conditional: SMEO] SKIP is a pre hunt TG control that causes the affected traffic to skip over the TG that the control is applied to and to attempt to find a trunk in the remaining route sequence. The next alternative routed TG does not necessarily have to be the next in chain TG in the route advance. It could be an out of chain TG that is substituted for the TG that was skipped. A call is affected by this control only if the characteristics of the call meet the options that have been preselected for the SKIP control.

Refer to GR-477-CORE, R6-9, for a detailed description of SKIP.

9.7.3.1.4 Reroute (RR)

[Required: TS, EOS, MFS – Conditional: SMEO] Reroute is a TG control that can either be an expansive pre hunt TG control or an expansive post hunt TG control. Normally, it is used as an expansive post hunt TG control. Use of the RR Control restricts offered calls from those routes known to be congested or failed, and provides substitute routes that have a higher probability of call completion. The requirements for RR Control are given in GR-477-CORE. When activating an RR Control, the Network Manager can choose between the single-via or multiple-via control types.

Refer to GR-477-CORE, O6- 11 .B, for a detailed description of RR.

9.7.3.1.4.1 Side-Via-Reroute

[Required: TS, EOS, MFS – Conditional: SMEO] A single-via or regular RR Control explanation must begin with an originating office designated "A", and a destination office designated "B", which are connected by a trunk group labeled "AB". In normal operation, calls that cannot be handled by trunk group AB are route-advanced to other trunk groups for completion in a predefined sequence known as a "Route Advance Chain."

Calls that cannot be handled by any of the chained trunk groups will be routed to a final treatment trunk group, which is usually an announcement. To implement an RR Control, there must be another NSE trunk group designated "via", which has the ability to route calls to destination B, but does not normally do so. *(Note:* Trunk group "via" is not required to have a direct link to office B, just the means to route calls to B.) Assuming that a RR Control is issued, if the call cannot be handled by trunk group AB, it is then offered to the via trunk group for completion. If the controlled call overflows the "A" to the "via" trunk group, it is offered to the next route in the normal chain. This is normally the first route advance if the call offered to trunk group AB is overflowed from AB and no controls are in effect. In other words, single-via-rerouting is the insertion of an out-of-chain route (trunk group) into the normal routing chain during the control period. There is no separate limit on the number of single-via RR Controls that may be active in an SPCS at any one time. However, all RR Controls are counted toward the maximum limit of 128 active Manual TG Controls.

9.7.3.1.4.2 Multiple-Via Reroute

[Required: TS, EOS, MFS – Conditional: SMEO] In cases where a single trunk group (called "via" in the above example) cannot handle all of the originating A to destination B traffic, up to seven trunk groups, each having means to route traffic to B, may be used. This capability is called "Multiple-via Reroute." An overflowed call from trunk group AB is offered in succession to all designated "via" trunk groups until it is handled. If none can carry the call, it is then offered to the next route in the normal chain. If the call is handled by a "via" trunk group, the next call to destination B is offered to the "via" trunk group following the one that handled the previous call. There is a separate limit of 16 multiple-via RR Controls, each having a maximum of seven via-routes per SPCS, all of which contribute to the limit of 128 Manual TG Controls. The term "ordered hunt" refers to traversing the multiple-via routing patterns described above. For each of the two control types, single-via or multiple-via, the following are additional options associated with the RR Control:

9.7.3.1.4.3 Overflow (ORR) vs. Immediate Reroute (IRR)

[Required: TS, EOS, MFS – Conditional: SMEO] The ORR option modifies the normal trunk group route advance hierarchy (in-chain) by inserting another trunk group (out-of-chain) into the call routing pattern. The IRR option provides for traffic to be rerouted before the calls are offered to a particular trunk group. If the IRR option is not specified in the "Reroute Control Request" the ORR option will be enabled by default. Any attempt to apply both ORR and IRR options to the same RR Control will have the effect of replacing the existing option (ORR/IRR) with the most recently specified option (ORR/IRR). That is, the option specified in the original command will be replaced by the option specified in the later command.

9.7.3.2 Code Controls

[Required: TS, EOS, MFS – Conditional: SMEO] Call gap code control is a manual protective control. The call gap control governs the maximum rate of attempts to a particular code, over a period of time, out of the office in which the control is implemented. This code control provides call gapping capabilities on destination codes of 3 to 10 digits. Options for these code controls include a selection of gap interval, a call disposition (EA1, EA2, NCA), and a switching domain. FLASH and FLASH OVERRIDE calls shall be exempted from this control.

9.7.3.2.1 Code Controls - Code Gapping Controls

[Required: TS, EOS, MFS – Conditional: SMEO] Manual Code Controls are Protective Controls that restrict calls having code prefixes for destinations that have been temporarily designated as difficult or impossible to complete.

The code prefixes may be Destination Codes (NPA, Service Access Code [SAC], etc.), 7-Digit Line Number, (KXX-XXXX), or a combination of them. Using this type of control allows available network resources to handle traffic to other destinations that has a better probability of completion. Code Controls are most effective for controlling "focused overloads," which are characterized by a surge of traffic from many locations within the network to a single office or destination code. This interface supports the "code-gapping" method of code control. A code-

gapping control is applied by specifying the code combination, i.e., NPA, NPA + KXX, etc., and the maximum rate at which calls are forwarded. Thus, the number of offered calls to a given destination is independent of the calling rate. For example, assume that calls to a particular area code (NPA) are to be restricted. The Network Manager has the ability to allow calls with the designated NPA prefix to be offered to a destination route at a rate ranging from 6 per minute to 12 per hour. The rate at which the calls are offered for completion is independent of the number of calls generated with the NPA prefix. This code-gapping technique provides a greater call completion precision than do other nonsupported methods such as "percentage blocking."

GR-477-CORE and GR-690-CORE contain the detailed requirements for Code Controls.

A maximum of 64 Code Controls may be active in the NSE at any one time. The Code

Control feature should allow the Network Manager to control calls all destination codes in his or connected networks

9.7.3.3 Total Office Manual Control Removal - Request/Response

[Required: TS, EOS, MFS – Conditional: SMEO] All total office controls are manual. All CANT, CANF, SKIP, or RR controls can be removed as a group on a total office basis. Code controls can also be removed on a total office basis. The capability to remove "ALL" manual controls in the entire office also exists. These commands will not remove the automatic control overrides. However, the ACC transmit/SILC override (inhibit) control can only be implemented or removed on a total office basis.

Refer to GR-747-CORE, Section 3.2.1.2 C. for a detailed description of this feature.

9.7.4 Treatment Options Of Calls That Are Terminated

[Required: TS, EOS, MFS – Conditional: SMEO] The following paragraphs describe how the termination of precedence level and ROUTINE calls will be handled based on the treatment they are given. The no circuits announcement (NCA), emergency announcement 1 (EA1), and emergency announcement 2 (EA2), are prerecorded announcement options that are selected by the network management controller. Since the control, Reroute (RR), is a control that allows the switch to search additional TG's outside of the in-chain sequence, RR would not cause a call to be terminated. However, some controls mentioned in this Section would cause a call to be terminated because they either prevent calls from accessing or overflowing a TG or in the case of code controls such as Code Block, they prevent calls from reaching a specified code.

If a precedence level call would normally be given reorder treatment, it shall be deflected to a blocked precedence announcement (BPA). If a precedence level call would normally be given no circuit treatment, it shall be deflected to a BPA.

If a ROUTINE call is given reorder treatment, the call shall be given 120 impulses per minute (IPM). If a ROUTINE call is given no circuit treatment, it shall be given a No Circuit Announcement (NCA) if the prerecorded option is available. If the announcement is not available,

the defaulting treatment is for the call to be given a 120 IPM. If a ROUTINE call is given emergency treatment, it shall be given either an emergency announcement 1 (EA1) or an emergency announcement 2 (EA2).

9.8 Remote Access to Switch

[Required: TS, EOS, SMEO, MFS] The DSN switching system shall be able to receive remote commands. These switch commands must be received through the switch access channel. The user interface to input these commands may be at a switch command prompt or via a switch provided user interface (e.g. GUI, text screen). The DSN switching system shall be able to receive remote commands for configuring the network related entries within the switch.

SECTION 10 - Integrated Services Digital Network (ISDN) Generic Requirements

10.0 Introduction

ISDN is a digital network technology capable of providing a wide variety of user applications. National ISDN is the Telcordia Technologies recommended implementation of ISDN to provide customer access to multiple services over a set of uniform interfaces.

The first step of National ISDN-1 (NI-1)was the initial deployment of National ISDN in 1992 and addressed the Basic Rate Interface (BRI). The second step of National ISDN-2 (NI-2) which expanded the BRI interface requirements and added Primary Rate Interface (PRI) requirements was introduced in 1993. NI-3 introduced an additional set of services for addressing "mass market" and other market needs.

DSN ISDN generic requirements are based on Telcordia Technologies National ISDN documentation summarized in Telcordia Technologies Special Report, SR-3476, Issue 1, *National ISDN 1995 and 1996,* June 1995. SR-3476 lists the features and functions NI-1 and NI-2 and is also a survey of three major switch manufacturers that shows that at least two of the three manufacturers, and most of the time all three, comply with NI-1 and NI-2.

10.1 DSN Generic ISDN Features and Interface Descriptions

DSN switching systems shall provide the ISDN BRI, PRI, and Packet Data capabilities shown in Tables 10-l through 10-6. Tables 3-l through 3-6 of Telcordia Technologies, *National ISDN 1995 and* 1996, SR-3476, Issue 1, June 1995, provide the specific requirements for features and capabilities listed in tables 10-l through 10-6 of this GSCR. MLPP interactions with ISDN are identified in Section 3 of this GSCR.

Table 10-l. BRI Access, Call Control, and Signaling

TS	MFS	EOS	SME 0	PBX 1	PBX 2	DVX		Feature or Capability
	R	R	R	C	c	c		ISDN BRI Layer 1
	R	R	R	C	c	c		4: 1 Time Division Multiplex Method for ISDN Basic Access
	R	R	R	C	c	c		ISDN BRI Laver 2
	R	R	R	C	C	C		BRI Circuit-Mode Call Control Basic Call Control
	R	R	R	C	C	C		BRI Terminal Initialization
	R	R	R	C	C	C		Service Profile Identifier
	R	R	R	C	c	c		Parameter Downloading:
	R	R	R	C	C	C		Default Services for Terminals
	R	R	C	C	C	C		BRI Interworking with SS7
	R	R	R	C	c	c		ISDN BRI Packet User Originated, On-Demand B-Channel Packet Conditional Notification

Legend:

R = REQUIRED: feature/function required in a candidate switch. Must adhere to the specific GSCR requirements

C = CONDITIONAL: feature/function is optional. However, if the feature/function is provided, it must adhere to the specific GSCR requirements.

Table 10-2. Uniform Interface Configurations for BRIs

T S	M FS	E OS	SME O	PBX 1	PBX 2	DVX		Feature or Capability
	R	R	R	C	C	C		Uniform Interface Configs. for BRI's Single User with Mult. Applications Two Users Sharing a BRI
	R	R	R	C	C	C		More than 2 B-Channel Terminals on a BRI (Passive Bus)
	R	R	R	C	C	C		Associated Group Indicator
	R	R	R	C	C	C		DN Sharing over Multiple Call Types on an Integrated Terminal
	R	R	R	C	C	C		Non-Initializing Terminals

Legend:

R = REQUIRED: feature/function required in a candidate switch. Must adhere to the specific GSCR requirements

C = CONDITIONAL: feature/function is optional. However, if the feature/function is provided, it must adhere to the specific GSCR requirements.

Table 10-3. BRI Features

TS	MFS	EOS	SMEO	PBX 1	PBX 2	DVX	Feature or Capability
	C	C	C	C	C	C	Electronic Key Telephone Systems
	C	C	C	C	C	C	Multiple DNs per Terminal
	C	C	C	C	C	C	Analog Member of an EKTS Group
	C	C	C	C	C	C	Multiple DN Appearances per Call Appearance Call Handling
	C	C	C	C	C	C	Hold/Retrieve
	C	C	C	C	C	C	Bridging/DN-Bridging
	C	C	C	C	C	C	Intercom Calling
	C	C	C	C	C	C	Membership in a Multiline Hunt Group
	C	C	C	C	C	C	Abbreviated and Delayed Ringing
	C	C	C	C	C	C	Automatic and/or Manual Bridged Call Exclusion
	C	C	C	C	C	C	Call Forwarding
	C	C	C	C	C	C	Call Forwarding Variable Courtesy Call Reminder Notification
	C	C	C	C	C	C	Call Forwarding Interface Busy
	C	C	C	C	C	C	Call Forwarding Don't Answer
	C	C	C	C	C	C	Call Forwarding Intragroup Only
	C	C	C	C	C	C	Call Forwarding Interface Busy Incoming Only
	C	C	C	C	C	C	Call Forwarding Don't Answer Incoming Only
	C	C	C	C	C	C	ISDN Call Hold Hold and Retrieve
	C	C	C	C	C	C	Flexible Calling
	C	C	C	C	C	C	Three-Way and Six-Way Calling
	C	C	C	C	C	C	Consultation Hold
	C	C	C	C	C	C	Conference Hold and Retrieve
	C	C	C	C	C	C	ISDN Display Service Protocol and Procedures Uniform Text (for NI-2 Uniform Services)
	C	C	C	C	C	C	Basic Business Group
	C	C	C	C	C	C	Denied Originating
	C	C	C	C	C	C	Denied Terminating
	C	C	C	C	C	C	Distinctive Alerting Indication
	C	C	C	C	C	C	Business Group Dial Access Features

TS	MFS	EOS	SMEO	PBX 1	PBX 2	DVX		Feature or Capability
	C	C	C	C	C	C		Dial Access to Automatic Flexible Routing
	C	C	C	C	C	C		Customer Access Treatment Code Restriction
	C	C	C	C	C	C		Code Restriction and Diversion
	C	C	C	C	C	C		Direct Outward Dialing
	C	C	C	C	C	C		Direct Inward Dialing
	C	C	C	C	C	C		ISDN Call Pickup
	C	C	C	C	C	C		ISDN Directed Call Pickup
	C	C	C	C	C	C		Access To Analog
	C	C	C	C	C	C		Attendant Access
	C	C	C	C	C	C		Station Message Detail Recording
	C	C	C	C	C	C		Tracing of Terminating Calls Tandem Call Tracing Trace of a Call In Progress Bulk Calling Line Identification Selective Call Acceptance Selective Call Forwarding Selective Call Rejection
	c	c	c	c	c	c	C	Limitations and Restrictions for 911 Calls Hold Not Allowed for a 911 Call Add a 911 Call to a Conference

Legend:

R = REQUIRED: feature/function required in a candidate switch. Must adhere to the specific GSCR requirements

C = CONDITIONAL: feature/function is optional. However, if the feature/function is provided, it must adhere to the specific GSCR requirements.

Table 10-4. PRI Access, Call Control, and Signaling

TS	MFS	EOS	SMEO	PBX 1	PBX 2	DVX		Feature or Capability
R	R	R	R	R	C	C		PRI Layer 1
R	R	R	R	R	C	C		PRI Layer 2 (Circuit)
R	R	R	R	R	C	C		PRI Call Control and Signaling
R	R	R	R	R	C	C		Basic Call Control for Circuit Mode Calls
R	R	R	R	R	C	C		Multiple DS 1 Facilities Controlled by a Single D-Channel
R	R		R	C		C		Access to Selected Primary Rate Services on a Per-Call Basis
R	R	C	C	C		C		PRI Interworking with SS7
R	R		R	C		C		PRI Packet-Mode Call Control

Legend:

R = REQUIRED: feature/function required in a candidate switch. Must adhere to the specific GSCR requirements

C = CONDITIONAL: feature/function is optional. However, if the feature/function is provided, it must adhere to the specific GSCR requirements.

Table 10-5. PRI Features

TS	MFS	EOS	SMEO	PBX 1	PBX 2	DVX		Feature or Capability
R	R		R	C		C		Call-by-Call Service Selection FX Non-ISDN Tie INWATS OUTWATS Non-ISDN ETN
R	R	R	R	R	C	C		Interworking with Private Networks

Legend:

R = REQUIRED: feature/function required in a candidate switch. Must adhere to the specific GSCR requirements

C = CONDITIONAL: feature/function is optional. However, if the feature/function is provided, it must adhere to the specific GSCR requirements.

Table 10-6. Packet Data Features and Capabilities

TS	MFS	EOS	SME 0	PBX 1	PBX2	DVX	Feature or Capability
C	C	C	C	C	C	C	PPSN Call Control and Features - X.25 Features
C	C	C	C	C	C	C	Closed User Groups (CUG),CUG Outgoing Access, CUG Incoming Access
C	C	C	C	C	C	C	Recognized Private Operating Administration (RPOA)
C	C	C	C	C	C	C	CCITT DTE Facilities
C	C	C	C	C	C	C	PPSN Call Control and Features X.75 and X.75' Utility Support
C	C	C	C	C	C	C	All X.75 Utilities in Minimal Subset
C	C	C	C	C	C	C	Multilink Procedures on X.75X.75
C	C	C	C	C	C	C	Support of X.75 End Office Connections
C	C	C	C	C	C	C	Selective Support of X.75' Utilities X.75 Utilities on X.75' Access Characteristics X.75 Interface Identifier Clearing Subnetwork Identification Transit Sub-network Count
C	C	C	C	C	C	C	Packet Numbering and Routing
C	C	C	C	C	C	C	Packet Mode Data Routing & Digit Analysis Requirements
C	C	C	C	C	C	C	Numbering Plan Interworking per TR-448 and TR-3 0 1.
C	C	C	C	C	C	C	User-to-User with Call Control (Packet)
C	C	C	C	C	C	C	Fast Select, Fast Select Acceptance
C	C	C	C	C	C	C	16 Octets of data in call reauest
C	C	C	C	C	C	C	ISDN X.25 Supplementary Services
C	C	C	C	C	C	C	One-Way Logical Channel Outgoing/Incoming
C	C	C	C	C	C	C	Incoming/Outgoing Calls Barred
C	C	C	C	C	C	C	Default Throughput Class Alignment
C	C	C	C	C	C	C	Nonstandard Default Packet Sizes
C	C	C	C	C	C	C	Nonstandard Default Window Sizes
C	C	C	C	C	C	C	Flow Control Parameter Negotiation
C	C	C	C	C	C	C	Throughput Class Negotiation
C	C	C	C	C	C	C	Transit Delay
C	C	C	C	C	C	C	User Testing
C	C	C	C	C	C	C	Multiline Hunt Group

TSC	MFSC	EOSC	SME 0	PBX 1	PBX2	DVX		Feature or Capability
C	C	C	C	c	c	c		Linear and/or Circular Hunting
C	C	C	C	c	c	c		Assignment of Non-Hunt DN to Hunt Terminals
C	C	C	C	c	c	c		ISDN Calling Number Identification Services
C	C	C	C	C	C	C		Inband Calling Number ID for Packet
C	C	C	C	c	c	c		Basic Business Group Inclusion of Packet In BBG Inclusion of Packet in Business Group Dialing Plan

Legend:

R = REQUIRED: feature/function required in a candidate switch. Must adhere to the specific GSCR requirements

C = CONDITIONAL: feature/function is optional. However, if the feature/function is provided, it must adhere to the specific GSCR requirements.

SECTION 11 – Synchronization

11.0 Introduction

The use of digital switching systems directly interconnected with digital transmission facilities as an integral part of the DSN requires the use of techniques for synchronizing clock rates. The term synchronization refers to an arrangement for operating digital switching systems at a common (or uniform) clock rate whereby the data signal is accompanied by a phase-related clock. Improperly synchronized clock rates result in the loss of portions of the bit streams and a concomitant loss of information. The DISN Timing and Synchronization (T&S) subsystem utilizes Navigation Satellite Timing and Ranging (NAVSTAR) Global Positioning System (GPS) transmissions from which a precise frequency is derived. This precise frequency timing signal is phase related (referenced) to Universal Time, Coordinated (UTC). The T&S subsystem frequency multiplier accepts precise frequency signals from primary source or, in case of failure, switches to an alternate source provided by atomic clocks, e.g., cesium beam or rubidium, if available. The Clock Distribution System disseminates timing through the equipment hierarchy. DSN switches may also receive system timing via digital transmission facilities to locations having direct access to (synchronized to) the timing sources already described. This chapter provides the requirements for network synchronization within the DSN.

11.1 Timing Modes

[REQUIRED: TS, EOS, SMEO, MFS] DSN switching systems shall meet the timing mode requirements specified in the Telcordia, GR-5 18-CORE, Issue 1, May 1994, paragraph 18.1. Most SMEOs will only support line timing. This should not be required for SMEOs or PBX1 .

11.1.1 External Timing Mode

11.1.1.1 External Timing Mode

[REQUIRED: TS, EOS, MFS – CONDITIONAL: SMEO] The switch shall support external timing modes as defined in Telcordia TR-N W-00 1244 Clocks *for the Synchronized Network: Common Generic Criteria, Issue 1 (June 1993).*

11.1.1.2 Line Timing Mode

[REQUIRED: TS, EOS, SMEO, MFS, PBX1] The switch shall support line timing modes as defined in Telcordia TR-NW-001244 Clocks *for the Synchronized Network: Common Generic Criteria, Issue 1 (June 1993).*

11.1.2 Internal Clock Requirements

11.1.2.1 General

[REQUIRED: TS, EOS, MFS – CONDITIONAL: SMEO] The switch shall provide internal clock requirements as described in the Telcordia, GR-5 1 S-CORE, Issue 1, May 1994, paragraph 18.2.

11.1.2.2 Stratum 4 Clock

[REQUIRED: SMEO, PBX1, PBX2] The switch shall provide a stratum 4 or better internal clock.

11.2 Synchronization Performance Monitoring Criteria

[REQUIRED: TS, EOS, MFS – CONDITIONAL: SMEO, PBX1, PBX2]. The switch shall meet the synchronization performance monitoring criteria as described in the Telcordia, GR-5 18-CORE, Issue 1, May 1994, paragraph 18.3.

11.3 DS1 Traffic Interfaces

[REQUIRED: TS, EOS, MFS - CONDITIONAL: SMEO, PBX1, PBX2]. The switch shall meet the DS 1 Traffic Interfaces as described in the Telcordia, GR-5 1 S-CORE, Issue 1, May 1994, paragraph 18.4.

11.4 DSO Traffic Interconnects

[REQUIRED: TS, EOS, MFS - CONDITIONAL: SMEO, PBX1, PBX2]. The switch shall meet the DSO Traffic Interconnects as described in the Telcordia, GR-5 1 8-CORE, Issue 1, May 1994, paragraph 18.5

SECTION 12 – Reliability

12.1 [Required: TS, MFS, EOS, SMEO] The DSN shall meet the reliability requirements in GR-5 12-CORE, Section 12, Issue 2, January 1998 and GR-474-CORE Issue 1, December 1997, Alarm and Control for Network Elements Criteria Common to Switching and Transport NEs. The DSN shall meet the Power requirements in GR-5 13-CORE, Issue 1, September 1995, Module of LSSGR, FR-64 and for all DSN switch types to use battery backup that provides a minimum of eight (8) hours reserved capacity that handles the engineered load for the installed switch capacity.

12.2 [Required: PBX1] The DSN shall meet a system availability of 0.99997. Detailed requirements are listed below. The explanation and format for these requirements are contained in GR-512-CORE, Section 12, Issue 2, January 1998, Sections 1 through 5. However, the values of the below requirements have been changed from the GR to reflect a judged reduced reliability requirement for a PBX. Also, those Termination and Capability Types specified in the GR, but not applicable to the DSN have been deleted:

12.2.1 The supplier shall provide a reliability model for the system showing all calculations and stating all assumptions.

12.2.2 The system shall be able to correctly detect, reconfigure, isolate, diagnose, and report the location of virtually all single hardware failures.

12.2.3 Predicted Individual Termination Downtimes shall not exceed the values in the following tab

Termination Type	Requirement
Analog Line	120 minutes/vear
Analog Trunk	120 minutes/year
Digital Trunk	80 minutes/year
Accumulated B-Channel Circuit (BRA and PRA)	80 minutes/year

12.2.4 Predicted Multitermination Downtimes shall not exceed values in the following table:

Termination Type	Requirement
Analog Trunk	I 10 minute&ear
Digital Trunk	10 minutes/year
Analog Line	10 minutes/vear
ISDN Circuit Switching	10 minutes/year

122.5 Predicted Total Capability Downtimes shall not exceed the values in the following table:

Capability Type	Requirement
Analog Line	3 minutes/year
ISDN Circuit Switching	3 minutes/year

12.2.6 Predicted Hardware Cutoff Call Rates shall not exceed the values in the following table:

Termination Type	Requirement
Analog Line	100,000 cutoffs per 10^9 hours of call duration
Analog Trunk	100,000 cutoffs per 10' hours of call duration
Digital Trunk	67,000 cutoffs per 10^9 hours of call duration
Accumulated B-Channel Circuit Mode	67,000 cutoffs per $1 0^9$ hours of call duration

12.2.7 Predicted Operations System Interface Downtime shall not exceed 120 minutes/year.

12.2.8 Predicted Capability Downtimes shall not exceed the values in the following table:

Capability Type	Requirement
Control	3 minutes/year
Visibility or Diagnostic Capability	3 minutes/year

SECTION 13 – Security

[REQUIRED: TS, EOS, MFS, SMEO, PBX1]

The DSN shall meet security requirements in GR-815-CORE, Issue 1, November 1997 and conform to the requirements outlined in *DODI* 5200.40, *30* December 1997, "Defense *Information Technology Security Certification and Accreditation Process (DITSCAP)* and the DSN Security Technical Implementation Guide (available on https://iase.disa.mil web site).

Acronyms

AAR - Automatic Alternate Routing
ABBT -Automatic Board-to-Board Testing
ACA - Automatic Circuit Assurance
ACC - Automatic Congestion Control
ACG - Automatic Call Gap
ACMOS - Automatic Customer Measurement Outputting System
ACR - Anonymous Call Rejection
ADIMSS – Advanced DSN Integrated Management Support System
ADS1 - Analog Display Services Interface
AFR - Automatic Flexible Routing
AIOD - Automatic Identified Outward Dialing
ALIT - Automatic Line Insulation Test
AMA -Automatic Message Accounting
AN1 - Automatic Number Identification
AR - Automatic Recall
ARS - Automatic Route Selection
AT - Access Tandem
BBG - Basic Business Group
BCC - Bellcore Client Company
BCLID - Bulk Calling Line Identification
BGAC - Business Group Automatic Callback
BGCW - Business Group Call Waiting
BGL - Business Group Line
CAMA - Centralized Automatic Message Accounting
CAP - Competitive Access Provider
CAROT - Centralized Automatic Reporting On Trunks
CAS – Channel Associated Switching
CAT - Customer Access Treatment
CCS - Common Channel Signaling 2
CCSA - Common Control Switching Arrangement
CDAR - Customer- Dialed Account Recording
CDR – Call Detail Recording
CF - Call Forwarding

CFBL - Call Forwarding Busy Line
CFDA - Call Forwarding - Don't Answer
CFV - Call Forwarding Variable
CGA - Carrier Group Alarm
CGAP - Call Gapping
CID - Calling Identity Delivery
CIDCW - Calling Identity on Call Waiting
CIDS - Calling Identity Delivery and Suppression
CMC - Cellular Mobile Carrier
CNAB - Calling Name Delivery Blocking
CNAM - Calling Name Delivery
CND - Calling Number Delivery
CNDB - Calling Number Delivery Blocking
CO - Central Office
CONUS - Continental United States
COPWAT - Customer-Owned Premises Wiring Acceptance Test
COT - Customer Originated Trace
CPE - Customer Premises Equipment
CPS - Customer Premises System
CPSG - Call Park Subscriber Group
CPTE - Customer Premises Terminal Equipment
CS - Call Screening
CSR - Customer Station Rearrangement
CW - Call Waiting
CWD -Call Waiting Deluxe
CWI - Call Waiting Indication
CWT - Call Waiting Terminating
DA - Directory Assistance
DDD - Direct Distance Dialing
DID - Direct Inward Dialing
DITSCAP – Defense Information Technology Security Certification and Accreditation Process
DGVSR DSN Generic Voice Over Internet Protocol Switching Requirements
DLC - Digital Loop Carrier
DN - Directory Number
DOC - Dynamic Overload Control
DOD - Direct Outward Dialing

DoD – Department of Defense
DP - Dial Pulse
DRCW - Distinctive Ringing/Call Waiting
DRE - Directional Reservation Equipment
DSO - Digital Signal level 0
DS1 - Digital Signal level 1
DSN – Defense Switched Network
DTMF - Dual-Tone Multifrequency
DVX – Deployable Voice Exchange
EADAS - Engineering and Administration Data Acquisition System
EAEO - Equal Access End Office
EAOSS - Exchange Access Operator Services System
EIS - Expanded Inband Signaling
EKTS - Electronic Key Telephone System
EMSS – Enhanced Mobile Satellite Systems
EOS - End Office Switch
EPSCS - Enhanced Private Switched Communication Service
ESP - Essential Service Protection
ETN - Electronic Tandem Network
ETS - Electronic Tandem Switching
FC - Facility Code
FCC - Federal Communications Commission
FD - Feature Definition
FEMF - Foreign Electromotive Force
FGA - Feature Group A
FGB - Feature Group B 4
FGC - Feature Group C
FGD - Feature Group D
FGE - Feature Group E
FGF - Feature Group F
FNPA - Foreign Numbering Plan Area
FR - Family of Requirements
FRL - Facility Restriction Level
FSD - Feature Specific Document
FTS – Federal Telecommunications Systems
FX - Foreign Exchange

GR - Generic Requirements
HNPA - Home Numbering Plan Area
HTR - Hard-To-Reach
IC - InterLATA Carrier or Interexchange Carrier
IDDD - International Direct Distance Dialing
IDLC - Integrated Digital Loop Carrier
IMASS - Integrated Multiple Access Switched Service
INC - International Carrier
IN WATS - Inward Wide Area Telecommunications Service
IVSN - Initial Voice Switched Network
I/O - Input/Output
ISDN - Integrated Services Digital Network
LAMA - Local Automatic Message Accounting
LATA - Local Access and Transport Area
LDN - Local Directory Number
LDS - Local Digital Switch
LED - Light Emitting Diode
LSSGR - LATA Switching Systems Generic Requirements
LUTS - Locked-Up Trunk Scan
MCC - Maintenance Control Center
MDII - Machine-Detected Interoffice Irregularities
MDR - Message Detail Recording
MF - Multifrequency
MFS – Multifunction Switch
MIS - Management Information System
MLHG - Multiline Hunt Group
MLT - Mechanized Loop Test
MSR - Message Storage and Retrieval System
MTS - Message Telephone Service
MU - Message Unit
MUF – Military Unique Feature
MVP - Multiline Variety Package
NAC - Network Administration Center
NANP - North American Numbering Plan
NDC - Network Data Collection
NI - Network Interface

NMC -Network Management Center
NORAD – North American Air Defense
NPA - Numbering Plan Area
NSEP - National Security Emergency Preparedness
NTM - Network Traffic Management
NUTS - Non-Usage Trunk Scan
OCS - Outgoing Call Screening
OIM - Operations Interface Module
ON1 - Operator Number Identification
OS - Operations System
OTGR - Operations Technology Generic Requirements
OUTWATS - Outward Wide Area Telecommunications Service
P/AR - Peak-To-Average Ratio
PABX -Private Automatic Branch Exchange
PAT Precedence Access Threshold
PBX - Private Branch Exchange
PCM - Pulse Code Modulation
PDMA - Provisioning-Driven Memory Administration
PFAC - Private Facility Access 6
PGS - Pair Gain System
PIC - Primary InterLATA Carrier
PIN - Personal Identification Number
PLAM - Public Line Activity Monitoring
POP - Point Of Presence
POTS - Plain Old Telephone Service
PPS - Pulses Per Second
PRE - Protectional Reservation Equipment
PSDS - Public Switched Digital Service
PTS - Public Telecommunications Service
PTT - Public Telephone and Telegraph
PVN - Private Virtual Network
RAO - Revenue Accounting Office
RC - Ring Control
RCF - Remote Call Forwarding
RCMAC - Recent Change Memory Administration Center
RDT - Remote Digital Terminal

RMAS - Remote Memory Administration System
ROP - Receive Only Printer
ROTL - Remote Office Test Line
RSB - Repair Service Bureau
RSU - Remote Switching Unit
RTP - Release To Pivot
SC/A - Signal Converter/Allotter
SCCS - Switching Control Center System
SCF - Selective Call Forwarding
SCOF - Selective Control of Facilities
SCP - Service Control Point
SCR - Selective Call Rejection
SES - Service Evaluation System
SFG - Simulated Facilities Group
SIT - Special Information Tone
SLU - Subscriber Line Usage
SMDF - Subscriber Main Distributing Frame
SMDI - Simplified Message Desk Interface
SMDR - Station Message Detail Recording
SMEO – Small End Office Switch
SOC - Service Observing Circuit
SPCS - Stored Program Control System
SS7 - Signaling System 7
SSP - Service Switching Point
STEP – Standard Tactical Entry Point
TCM - Traveling Class Mark
TLWS - Trunk and Line Work Station
TOS - Trunk Out of Service
TR - Technical Reference
TRD - Timed Release Disconnect
TS - Tandem Switch
TSP - Tandem Switching Provider
TTY - Teletypewriter
TWC - Three-Way Calling
UN - Uniform Numbering.
USTWC - Usage-Sensitive Three-Way Calling

VDT - Video Display Terminal

VF - Voice Frequency

VMWI - Visual Message Waiting Indicator

VSC - Vertical Service Code

WATS - Wide Area Telecommunications Service

WWNDP -- World Wide Numbering and Dialing Plan

Reference List

ANSI T 1.6 19- 1992, ISDN MLPP Service Capability

ANSI T1.619a-1994, ISDN MLPP Service Capability (Supplement to ANSI T1.619-1992)

ANSI T 1.1 10- 1999, Signaling System No. 7, General Information

ANSI T 1 , 1 1 1- 1996, Signaling System No. 7, Message Transfer Part

ANSI T1 . 112- 1996, Signaling System No. 7, SCCP Functional Description

ANSI T1 .113-1 995, Signaling System No. 7, ISDN User Part

ANSI T1 .114-2000, Signaling System No. 7 (SS7) - TCAP

ANSI T1 .116- 1996, Signaling System No. 7 (SS7) Operations, Maintenance, and Administrative Part (OMAP) (Revision and Consolidation of ANSI)

ANSI T1 . 116a- *1998, Supplemental ANSI*

ANSI T1.607-1998, ISDN Layer 3 Signaling Specifications for Circuit Switched Bearer Service for Digital Subscriber Signaling System No. 1 (DSS1)

ANSI T1.613-1992, ISDN Call Waiting Supplementary Service

ANSI T1.616-1992, ISDN Call Hold Supplementary Service.

ANSI T1.62 l-l 992, ISDN User-to-User Signaling Supplementary Service

ANSI T1.632-1993, ISDN Normal Call Transfer Supplementary Service

ANSI T1.642-1993, ISDN Call Deflection Supplementary Service

ANSI T1.643- 1995, ISDN Explicit Call Transfer Supplementary Service

ANSI T1.647- 1995, ISDN Conference Calling Supplementary Service

Telcordia Technologies GR-205-CORE, *Generic Requirements for ISDN Electronic Key Telephone Systems,* Issue 1, February 1996

Telcordia Technologies GR-2 17-CORE, *CLASS^{SM} Feature: Selective Call Forwarding,* Issue 1, June 2000

Telcordia Technologies GR-2 18-CORE, *CLASS^{SM} Feature: Selective Call Rejection,* Issue 1, June 2000

Telcordia Technologies GR-303-CORE, *System Generic Requirements, Objectives, and Interface,* Issue 4, December 2000.

Telcordia Technologies GR-3 17-CORE, *Switching System Generic Requirements for Call Control Using the Integrated Services Digital Network User Part,* November 2000

Telcordia Technologies GR-472-CORE, *Network Element Configuration Management,* Revision 2, Feb. 1999

Telcordia Technologies GR-477-CORE, *Network Traffic Management,* Issue 4, Feb. 2000

Telcordia Technologies GR-478-CORE, *Measurements and Data Generation,* Issue 4, Feb. 2000

Telcordia Technologies GR-505-CORE, *Call Processing,* Issue 1, Dec. 1997

Telcordia Technologies GR-506-CORE, *Signaling for Analog Interfaces,* Issue 1, Revision 1, Nov. 1996

Telcordia Technologies GR-5 1 *O-CORE, System Interfaces,* Issue 1, June 2000

Telcordia Technologies GR-5 12-CORE, *Reliability,* Issue 2, June 1998

Telcordia Technologies GR-5 17-CORE, *Traffic Capacity and Environment,* Issue 1, December 1998

Telcordia Technologies GR-5 1 *S-CORE, Synchronization Section 18,* Issue 1, May 1994

Telcordia Technologies GR-520-CORE, *Features Common to Residence and Business,* Issue 1, June 2000

Telcordia Technologies GR-524-CORE, *PBX Line,* Issue 1, June 2000

Telcordia Technologies GR-529-CORE, *Public Safety,* Issue 1, June 2000

Telcordia Technologies GR-532-CORE, *Call Processing Features,* Issue 1, June 2000

Telcordia Technologies GR-533-CORE, *Database Services Service Switching Points,* Issue 1, June 2000

Telcordia Technologies GR-540-CORE, *Tandem Supplement,* Issue 2, March 1999

Telcordia Technologies GR-562-CORE, *Manual Line Features,* Issue 1, June 2000

Telcordia Technologies GR-569-CORE, *Multiline Hunt Service,* Issue 1, June 2000

Telcordia Technologies GR-571-CORE, *Call Waiting,* Issue 1, June 2000

Telcordia Technologies GR-572-CORE, *Cancel Call Waiting,* Issue 1, June 2000

Telcordia Technologies GR-577-CORE, *Three-way Calling,* Issue 1, June 2000

Telcordia Technologies GR-579-CORE, *Add-on Transfer and Conference Calling Features,* Issue 1, June 2000

Telcordia Technologies GR-580-CORE, *Call Forwarding Variable,* Issue 1, June 2000

Telcordia Technologies GR-586-CORE, *Call Forwarding Subfeatures,* Issue 1, June 2000

Telcordia Technologies GR-590-CORE, *Call Pick-up Features,* Issue 1, June 2000

Telcordia Technologies GR-606-CORE, *Common Channel Signaling Section* 6.5, December 2000

Telcordia Technologies GR-62 1 -CORE, *Traffic Data Provision Features,* Issue 1, June 2000

Telcordia Technologies GR-690-CORE, *Exchange Access Interconnection,* Issue 2, November 1996

Telcordia Technologies GR-741-CORE, *Network Administration Center (NAC) Input/Output Channel,* Issue 1, June 2000

Telcordia Technologies GR-747-CORE, *An Alternative Implementation of an SPCS to NTM OS Interface via an NDC* OS, Issue 1, June 2000

Telcordia Technologies Special Report, SR-3476, Issue 1, *National ISDN I995 and 1996,* June 1995

Telcordia Technologies Special Report, SR-2275, Issue *4, Telcordia Notes on the Networks,* October 2000

DISA Circular DISAC 3 10-255-l

ITU-T 1.320, *ISDN Protocol Reference Model, Nov. 93*

ITU-T 1.430, *Basic User-Network Interface-Layer 1 Specification, Nov. 95*

ITU-T I.43 1, *Primary Rate User-Network Interface-Layer 1 Specification,* June 97

ITU-T Q.920, *ISDN User-Network Interface Data Link Layer – General Aspects,* March 93, and Amendment 1, June 2000

ITU-T Q.92 1, *ISDN User-Network Interface – Data Link Layer Spectjication,* Sep 93, and Amendment 1, June 2000

ITU-T 4.93 1, *ISDN User-Network Interface Layer 3 Specification for Basic Call Control,* May 98

ITU-T Q. 932, *Digital Subscriber signaling System No. 1 Generic Procedures For The Control of ISDN Supplementary Services,* May 98, and Amendment 1, Jun 2000

ITU-T *4.955, Community of Interest Supplementary Services using DSS-1*

ITU-T G.703, *Physical/Electrical Characteristics of Hierarchical Digital Interfaces,* Oct 98

ITU-T G.726, *40, 32, 24, 17 kbit/s Adaptive Differential Pulse Code Mode Modulation (ADPCM),* Dec 90

ITU-T *G.732, Characteristics of Primary PCM Multiplex Equipment Operating at 2048 kbit/s, Nov 88*

ITU-T *G.772, Protected Monitoring Points Provided on Digital Transmission Systems,* Mar 93

ITU-T *G.704, Synchronous Frame Structures used at 1544, 6312, 2048, 8448, and 44736 kbit/s Hierarchical Levels,* Oct 98

ITU-T *G.7* 11, *Pulse Code Modulation (PCM) of Voice Frequencies, Nov 88*

MIL-STD- 187-700

MIL-STD- 188- 194, *Integrated Services Digital Network Profile,* 1992

Defense Switched Network (DSN) Worldwide Routing and Numbering Plan (WRNP)

Appendix 1 -- Requirements Matrix

The following matrix summarizes the requirements by switch type for each feature/function described in this GSCR. A blank space indicates that this feature/function is not applicable to a particular switch. In the event that a disparity is found, the specific paragraphs in the GSCR shall take precedence over this matrix. This matrix should be used in conjunction with the GSCR and not as a stand-alone document.

The following Table Paragraphs are modified by this "Changed Page" release notice.. .as annotated by C*..
Para 3.6 (Inclusive)
Para 2.3.3

PARAGRAPH	SUBJECT						
		TS	MFS	EOS	SMEO	PBX1	PBX2
	SECTION 2 - Capabilities and Features						
2.1.1	Individual Line		R	R	R	R	R
2.1.2	CLASS Feature: Selective Call Rejection		C	C			
2.1.3	Denied Originating Service		C	C	C	C	
2.1.4	Code Restriction and Diversion		R	R	R	C	
2.1.5.1	Call Waiting (CW)		C	C	C	C	
2.1.5.2	Cancel Call Waiting		C	C	C	C	
2.1.6	Three-Way Calling (TWC)		C	C	C	C	
2.1.7	Add-On Transfer and Conference Calling Features		C	C	C	C	
2.1.7.1	Call Transfer Individual - All Calls		C	C	C	C	
2.1.7.2	Call Transfer - Internal Only		C	C	C	C	
2.1.7.3	Call Transfer - Individual - Incoming Only/Add-on Consultation Hold - Incoming Only		C	C	C	C	
2.1.7.4	Call Transfer - Outside		C	C	C	C	
2.1.7.5	Call Transfer-Add-on to Fully Restricted Station		C	C	C	C	
2.1.7.6	Call Transfer Attendant		C	C	C	C	
2.1.7.7	Call Hold		C	C	C	C	
2.1.7.8	Conference Calling - Six Way Station Controlled		C	C	C	C	
2.1.8.1	Call Forwarding Variable		C	C	C	C	
2.1.8.2	Call Forwarding Busy Line (CFBL)		C	C	C	C	
2.1.8.3	Call Forwarding Don't Answer All Calls		C	C	C	C	
2.1.8.4	CLASS Feature: Selective Call Forwarding		C	C	C	C	
2.1.9.1	Call Pick-Up		C	C	C	C	
2.1.9.2	Directed Call Pick-Up		C	C	C	C	

PARAGRAPH	SUBJECT						
		TS	MFS	EOS	SMEO	PBX1	PBX2
2.1.9.3	Directed Call Pick-Up without Barge-In		C	C	C	C	
2.2.1	Precedence and Preemption		R	R	C	C	
2.2.2	Call Display		R	R	C	C	
2.2.3	Class of Service Override		R	R	C	C	
2.2.4	Busy Override and Busy Verification		R	R	C	C	
2.2.5	Night Service		R	R	C	C	
2.2.6	Automatic Recall of Attendant		R	R	C	C	
2.2.7	Calls in Queue to the Attendant		R	R	C	C	
2.3.1	PBX Line		R	R	C	C	
2.3.2	Direct Inward Dialing (DID)		R	R	C	C	
2.3.3	National ISDN 1/2 Basic Access		R	R	R	C*	C
2.3.4	National ISDN 1/2 Primary Access.	R	R	R	R	C	C
2.3.5	Analog Line		R	R	R	R	C
2.4.1	Basic Emergency Service (911)		C	C	C	C	C
2.4.2	Tracing of Terminating Calls.		R	R	R	C	
2.4.3	Outgoing Call Tracing.		R	R	R	C	
2.4.4	Tandem Call Trace.	R	R	R	R		
2.4.5	Trace of A Call in Progress.	R	R	R	R		
2.5.1.1	100-Type Test Line	R	R	R	C		
2.5.1.2	101-Type Test Line	R	R	R	C		
2.5.1.3	102-Type Test Line	R	R	R	C		
2.5.1.4	105-Type Test Line	R	R	R	C		
2.5.1.5	Synchronous Test Line	R	R	R	C		
2.5.1.6	Non-synchronous Test Line	R	R	R	C		
2.5.1.7	Permanent Busy Test Line	R	R	R	C		
2.5.1.8	108-Type Test Line	R	R	R	C		
2.5.2.1	Dialable Cable Pair Locator Tone		C	C	C		
2.5.2.2	DTMF Station Test Circuit		R	R	C		

PARAGRAPH	SUBJECT						
		TS	MFS	EOS	SMEO	PBX1	PBX2
2.5.3	Test Incoming Trunks in Tandem or Local State	C	C	C	C		
2.5.4.1	Manual Test of Line		R	R	C	C	
2.5.4.2	Manual Test of Trunks	R	R	R	R		
2.5.5	Trunk Group - Remove from Service (Make Busy)	R	R	R	R	C	
2.5.6	Trunk Group - Restore to Service (Make Idle)	R	R	R	R	C	
2.5.7	Carrier Group Alarm (CGA)	R	R	R	R		
2.5.7.1	Software Carrier Group Alarm	C	C	C	C		
2.6	Preset Conferencing	R	R	R	C	C	
2.6.1	Conference Notification Recorded Announcement	R	R	R	C	C	
2.6.2	Automatic Retrial and Alternate Address	R	R	R	C	C	
2.6.3	Bridge Release	R	R	R	C	C	
2.6.4	Secondary Conferencing	R	R	R	C	C	
2.7	Address Translation	R	R	R	C	C	
2.8	Nailed-Up Connections	R	R	R	C	C	
2.9	Assured Dial Tone	R	R	R	R	C	
2.11	Control Of Precedence Calls		C				
2.11.1	Precedence Access Threshold (PAT)		C				
2.11.1.1	Call Screening		C				
2.11.1.2	Functional Structure		C				
2.11.1.3	Simultaneous Calls Limitation		C				
2.11.1.4	Overflow Process		C				
2.11.1.5	Decrementing the Calls-In-Progress Count		C				
2.11.1.6	Call Treatment		C				
2.11.1.7	Queuing		C				
2.11.1.8	Attendant Calls		C				

PARAGRAPH	SUBJECT						
		TS	MFS	EOS	SMEO	PBX1	PBX2
2.11.1.9	Operational Measurement Registers		C				
2.11.1.10	Maintenance and Administration of Thresholds		C				
2.12	DSN ISDN Hotline Service		R	R	R		
2.12.1	Protected Hotline Calling		R	R	R		
2.12.2	Pair Protected Hotline Calling		R	R	R		
2.12.3	Unprotected Hotline Receiving		R	R	R		
2.12.4	Protected Hotline Receiving		R	R	R		
2.12.5	User Interoperability		R	R	R		
	SECTION 3 - Multi-Level Precedence and Preemption (MLPP)						
3.1.1	Description	R	R	R	R	R	
3.1.2	Precedence Levels	R	R	R	R	R	
3.1.3	Announcements	R	R	R	R	R	
3.1.4	Invocation and Operation.	R	R	R	R	R	
3.2	Preemption in the Network	R	R	R	R	R	
3.2.1	Network Facilities Active With Lower Precedence Calls	R	R	R	R	R	
3.2.1.1	CANCEL to (CANT) / CANCEL from (CANF)	R	R	R	C		
3.2.2	Network Facilities Active With Equal or Higher Precedence Call	R	R	R	R	R	
3.2.3	MLPP Trunk Selection (Hunting).	R	R	R	R		
3.2.3.1	Hunt Sequence for Trunks	R	R	R	R		
3.2.3.1.1	ROUTINE Calls	R	R	R	R		
3.2.3.1.2	Precedence Calls Above ROUTINE	R	R	R	R		
3.2.3.1.2.1	Method 1	R	R	R	R		
3.2.3.1.2.2	Method 2	R	R	C	C		
3.2.4.1	Calls From non-MLPP Networks	R	R	R	R		
3.2.4.2	Precedence Calls to Non-MLPP Networks	R	R	R	R		

PARAGRAPH	SUBJECT						
		TS	MFS	EOS	SMEO	PBX1	PBX2
3.3	Precedence Call Diversion		R	R	R	R	
3.4.1	Channel Associated Signaling (CAS)	R	R	R	R	C	
3.4.2	Primary Rate Interface (PRI)	R	R	R	R	R	
3.4.3	Common Channel Signaling Number 7 (CCS7)	R	R	R	C		
3.5.1	Busy At The Called Party's Interface		R	R	R	R	
3.5.1.1	Line Active With A Lower Precedence Call		R	R	R	R	
3.5.1.2	Line Active With An Equal or Higher Precedence Call Above Routine		R	R	R	R	
3.6	ISDN Basic Rate Interface (BRI)		R	R	R	C*	C*
3.6.2	Single B-Channel, Single Appearance, Single Directory Number (DN)		R	R	R	C*	C*
3.6.2.1	Line Active With A Lower Precedence Call		R	R	R	C*	C*
3.6.2.2	Line Active With An Equal or Higher Precedence Call		R	R	R	C*	C*
3.6.3	Single B-Channel, Multiple Appearances, Single Directory Number (DN)	R	R	R	R	C*	c*
3.6.4	Two (2) B-Channels, Multiple Appearances, Single Directory Number (DN)	R	R	R	R	C*	C*
3.6.5	Two B-Channels, 2 Directory Numbers (DN)	R	R	R	R	c*	c*
3.7.2	Precedence Level Information Elements	R	R	R	R	R	
3.7.3	Disconnect Message Information Cause Values	R	R	R	R	R	
3.7.4	Signal Information Element	R	R	R	R	R	
3.7.5	ANSI T1.619a Setup Message Called Party Number Format	R	R	R	R	R	
3.7.6	ANSI T1.619a and non-T1.619a Interaction	R	R	R	R	R	
3.8.1	Precedence Call Waiting	C	C	C	C	C	
3.8.1.1	Busy with higher precedence call	C	C	C	C	C	
3.8.1.2	Busy with equal precedence call	C	C	C	C	C	
3.8.1.3	Busy with lower precedence call	C	C	C	C	C	

PARAGRAPH	SUBJECT	TS	MFS	EOS	SMEO	PBX1	PBx2
3.8.1.4	No Answer	C	C	C	C	C	
3.8.2	Call Forwarding	C	C	C	C	C	
3.8.2.1	Call Forwarding at a Busy Station	C	C	C	C	C	
3.8.2.2	Call Forwarding No Reply at Called Station	C	C	C	C	C	
3.8.3.1	Call transfer interaction at different precedence levels		C	C	C	C	
3.8.3.2	Call transfer interaction at same precedence levels		C	C	C	C	
3.8.4	Call Hold	C	C	C	C	C	
3.8.5	Three-Way Calling (TWC)		C	C	C	C	
3.8.6	Call Pick-Up		C	C	C	C	
3.8.7.1	Conference Precedence Level	R	R	C	C	C	
3.8.8	Multiline Hunt Service		C	C	C	C	
3.8.9	Community of Interest (COI)	R	R	R	C	C	
3.8.9.2.1	COI Screening treatment for Originating Call Requests	R	R	R	C	C	
3.8.9.2.2	COI Screening treatment for Terminating Call Requests	R	R	R	C	C	
3.9	MLPP Common Channel Signaling Number 7 (CCS7)	R	R	R	C		
3.9.3	Look-Ahead For Busy	R	R	R	C		
3.9.4	Precedence Parameters	R	R	R	C		
3.9.4.1	Actions Required at Originating Exchange	R	R	R	C		
3.9.4.2	MLPP CCS7 Transaction Capability Application Part (TCAP) -Definitions and Functions of Transaction Capability (TC) Operations, Parameters, and Error Codes	R	R	R	C		
3.9.4.2.1	Parameters	R	R	R	C		
3.9.4.2.1.1	Bearer Capability Supported - 1001001	R	R	R	C		

PARAGRAPH	SUBJECT						
		TS	MFS	EOS	SMEO	PBX1	PBX2
3.9.4.2.1.2	Circuit Identification Code - 10011010	R	R	R	C		
3.9.4.2.1.3	Call Reference - 10011100	R	R	R	C		
3.9.5	RELEASE Message Cause Values	R	R	R	C		
3.9.6	DSN MLPP CCS7 INITIAL ADDRESS MESSAGE (IAM) CALLED PARTY NUMBER FORMAT.	R	R	R	C		
3.10	Channel associated signaling to Common channel signaling (CAS-to-CCS) trunk inter-working in a mixed media network	R	R	R	C		
3.11.1	Electronic Key Telephone Systems (EKTS)		C	C	C	C	
3.11.1.1	Call Appearances		C	C	C	C	
3.11.1.2	Hold		C	C	C	C	
3.11.1.3	DN Bridging		C	C	C	C	
3.11.1.4	Intercom Calling		C	C	C	C	
3.11.1.5	Abbreviated Or Delayed Ringing Treatment On Incoming Calls		C	C	C	C	
3.11.1.6	Bridged Call Exclusion (BCE)		C	C	C	C	
3.11.1.7	Non-ISDN Users		C	C	C	C	
3.12.1	Precedence Parameter		C	C	C	C	
3.12.2	Cause Values & Location Codes		C	C	C	C	
3.13	Network Management Manual Controls	R	R	R	C		
3.14	Data Collection		R	R	R		
	SECTION 4 - Call Processing						
4.1.1	Origination Treatment	R	R	R	R	R	
4.1.1.1	Originating Busy	R	R	R	R	R	
4.1.2	Termination Treatment	R	R	R	R	R	C
4.1.2.1	Busy or Idle Status	R	R	R	R	R	C
4.1.3	Release Treatment	R	R	R	R	R	C
4.1.4	Interruption Treatment	R	R	R	R	R	C
4.1.5	Connections	R	R	R	R	R	C

PARAGRAPH	SUBJECT						
		TS	MFS	EOS	SMEO	PBX1	PBX2
4.1.6	Class of Service	R	R	R	R	C	C
4.2	Primary and Alternate Routing	R	R	R	R		
4.3.1	Ear & Mouth (E&M) Lead Signaling States	C	C	C	C	C	C
4.3.2	Four-Wire Analog User Access Lines	C	C	C	C	C	C
4.3.3	Two-Wire User Access Lines		R	R	R	R	C
4.3.4.1	Busy/Idle Status		R	R	R	R	
4.4.1	Originating Call Processing	R	R	R	R		
4.4.2	Terminating Call Processing	R	R	R	R		
4.5.1.1	DSN User Dialing.	R	R	R	R	R	
4.5.1.2	Interswitch and Intraswitch Dialing.	R	R	R	R	C	
4.5.1.2.1	Seven-Digit Dialing	R	R	R	R	R	
4.5.1.2.2	Ten-Digit Dialing	R	R	R	R	R	
4.5.1.3	Access Code	R	R	R	R	R	
4.5.1.3.1	Access Digit	R	R	R	R	R	
4.5.1.3.2	Precedence Digit	R	R	R	R	R	
4.5.1.3.3	Service Digits	R	R	R	R	R	
4.5.1.4	Route Code		R	R	R	R	
4.5.1.5	Area Code	R	R	R	R	R	
4.5.1.6	Switch Code	R	R	R	R	R	
4.5.1.7	Line Number	R	R	R	R	R	
4.5.1.8	Emergency Service 911 Conflict Resolution		R	R	R	R	
Table 4-9	DSN Switch MFR1 Outpulsing Digit Format	R	R	R	C	C	
Table 4-10	DSN Switch DTMF Outpulsing Digit Format	R	R	R	C	C	
4.5.2.1	Route Control Digit (RCD)	R	R				
4.5.3	Standard Directory Numbers		R	R	R	R	
4.5.4	Standard Test Numbers	R	R	R	C	C	
4.5.5	Base Services - Abbreviated Numbers	R	R	R	R	C	
4.5.6	Digit Reception Requirements	R	R	R	R	R	

PARAGRAPH	SUBJECT						
		TS	MFS	EOS	SMEO	PBX1	PBx2
4.5.7	Digit Registration Capacity	R	R	R	R		
4.5.8	Screening		R	R	R	C	C
4.5.8.1	Zone Restriction Servicing of Local Originators		R	R	R	C	C
	SECTION 5 - Signaling						
5.1	Network Power Systems for External Interfaces	R	R	R	R		
5.2.1	Loop Start Line		R	R	R	R	C
5.2.2	Ground Start Line		R	R	R	R	C
5.3.1	Reverse Battery (RB)		R	R	R	R	C
5.3.2	Immediate Start	R	R	R	C	C	C
5.3.3.1	Normal Wink Start Operation	R	R	R	R	C	C
5.3.3.2	Glare Operation	R	R	R	R	C	C
5.3.3.3.1	Wink Start	R	R	R	R	C	C
5.3.3.3.2	Glare Resolution	R	R	R	R	C	C
5.3.4	Delay Dial		C	C	C	C	C
5.3.5	Call for Service Timing	R	R	R	R	R	C
5.3.6	Guard Timing	R	R	R	R	R	C
5.3.7	Satellite Interface	R	R	R	R	C	C
5.3.8	Disconnect Control	R	R	R	R	C	C
5.3.9	Reselect or Retrial	R	R	R	R	C	C
5.3.10	Off-Hook Supervision Transitions (Unexpected Stop)		R	R	R	C	C
5.4.1	Dial-Pulse (DP) Signals	R	R	R	R	C	C
5.4.2	Dual Tone Multi-Frequency (DTMF) Signaling	R	R	R	R	C	C
5.4.2.1	Standard Digit Format for Precedence	R	R	R	C	C	
5.4.3	MF (R1) 2/6 Signaling	R	R	R	C	C	
5.5.1	Ringing		R	R	R	R	

PARAGRAPH	SUBJECT						
		TS	MFS	EOS	SMEO	PBX1	PBX2
5.5.2	DSN Information Signals		R	R	R	R	
5.6	Common Channel Signaling Number 7 (CCS7)	R	R	R	C		
5.6.1	CCS7 Network Structure	R	R	R	C		
5.6.2	Functional Description of the Signaling System Message Transfer Part (MTP)	R	R	R	C		
5.6.2.1.1	Signaling Data Link Functions (Level 1)	R	R	R	C		
5.6.2.1.2	Signaling Link Functions (Level 2)	R	R	R	C		
5.6.3.1	Routing Label	R	R	R	C		
5.6.3.2	Handling Messages Under Signaling Link Congestion	R	R	R	C		
5.6.3.3	Message Discrimination and Distribution Functions	R	R	R	C		
5.6.3.4	Signaling Network Management	R	R	R	C		
5.6.3.5	Changeback	R	R	R	C		
5.6.4	Noncircuit-Related Information Exchange - Signaling Connection Control Part (SCCP)	R	R	C	C		
5.6.5	Additional Procedures for Switch-to-Switch/SCP TCAP Messages	R	R	R	C		
5.6.6	Message Transfer Part (MTP) Restart	R	R	R	C		
5.6.7	Signaling Link Management	R	R	R	C		
5.6.8	Signaling Route Management	R	R	R	C		
5.6.9.1	Service Indicator	R	R	R	C		
5.6.9.2	Subservice Field	R	R	R	C		
5.6.10	Formats and Codes of Signaling Network Management Messages	R	R	R	C		
5.6.11	Numbering of Signaling Point Codes	R	R	R	C		
5.6.12.1	Scope, Purpose, and Application	R	R	C	C		
5.6.12.2	End-To-End Signaling	R	R	C	C		
5.6.13	Formats and Codes - Integrated Services Digital Network (ISDN) User Part	R	R	R	C		

PARAGRAPH	SUBJECT						
		TS	MFS	EOS	SMEO	PBX1	PBX2
	Parameters						
5.6.13.1	Notification Indicator	R	R	R	C		
5.6.13.2	IS-UP Messages	R	R	R	C		
5.6.13.3	IS-UP Parameters	R	R	R	C		
5.7.1.1	Application		R	R	R	R	C
5.7.1.2	Physical Layer.		R	R	R	R	C
5.7.1.2.1	S/T Reference Point		R	R	R	R	C
5.7.1.3	Data-Link Layer.	R	R	R	R	R	C
5.7.1.3.1	Data-Link Connections	R	R	R	R	R	C
5.7.1.3.2	Peer-to-Peer Procedures of the Data-Link Layer	R	R	R	R	R	C
5.7.1.4	Layer 3 DSN User-to-Network Signaling	R	R	R	R	R	C
5.7.1.4.2	DSN User-to-Network Signaling for Circuit-Switched (CS) Bearer Service	R	R	R	R	R	C
5.7.1.4.3	Sequence of Messages for DSN Circuit-Switched (CS) Calls	R	R	R	R	R	C
5.7.1.4.4	Message Functional Definitions and Content	R	R	R	R	R	C
5.7.1.4.5	General Message Format and Info. Elements (IE) Coding	R	R	R	R	R	C
5.7.1.4.6	Supplementary Services		C	C	C	C	C
	SECTION 6 - Transmission						
6.0	DISN/DSN Transmission Interface	R	R	R	R	R	R
6.1	Input Impedance	R	R	R	R	R	R
6.2	Inserted Connection Loss	R	R	R	R	R	R
6.2.1	Average Loss At 1004 Hz And Loss Control	R	R	R	R	R	R
6.2.2	Loss Variability At 1004 Hz	R	R	R	R	R	R
6.2.3	Attenuation Distortion	R	R	R	R	R	R
6.2.4	Tracking Error	R	R	R	R	R	R

PARAGRAPH	SUBJECT						
		TS	MFS	EOS	SMEO	PBX1	PBX2
6.3	Frequency Response	R	R	R	R	R	R
6.4	Overload Level	R	R	R	R	R	R
6.5	Return Loss	R	R	R	R	R	R
6.5.1	Two-Wire Line Return Loss	R	R	R	R	R	R
6.5.2	Four-Wire Trunk Return Loss (Impedance)	R	R	R	R	R	R
6.6	Longitudinal Balance	R	R	R	R	R	R
6.7	60 Hz Longitudinal Current	R	R	R	R	R	R
6.8	Idle Channel Noise	R	R	R	R	R	R
6.8.1	C-Message Weighting	R	R	R	R	R	R
6.8.2	Flat-Weighting Noise	R	R	R	R	R	R
6.9	Power Line Interference	R	R	R	R	R	R
6.10	Impulse Noise	R	R	R	R	R	R
6.11	Crosstalk Coupling	R	R	R	R	R	R
6.12	Intermodulation Distortion	R	R	R	R	R	R
6.13	Signal To Distortion Ratio (C-Notched Noise)	R	R	R	R	R	R
6.14	Absolute Delay	R	R	R	R	R	R
6.15	Envelope Delay Distortion	R	R	R	R	R	R
6.15.1	Echo Path Delay	R	R	R	R	R	R
6.16	Bit Integrity	R	R	R	R	R	R
6.17	Switched Digital Bit Error Rate	R	R	R	R	R	R
6.18	Encoding And Decoding Levels	R	R	R	R	R	R
6.18.1	DSN Fixed Loss Plan	R	R	R	R	R	R
6.18.1.1	Switch Transmission Level Points (TLPs).	R	R	R	R	R	R
	SECTION 7 - System Interfaces						
7.1	PCM-24 Digital Trunk Interface	R	R	R	R	R	R
7.1.1	Interface Characteristics	R	R	R	R	R	R
7.1.2	Supervisory Channel Associated Signaling	R	R	R	R	C	C

PARAGRAPH	SUBJECT						
		TS	MFS	EOS	SMEO	PBX1	PBx2
7.1.3	Clear Channel Capability (CCC)	R	R	R	R	R	C
7.1.4	Alarm and Restoral Requirements	R	R	R	R	R	C
7.2	PCM-30 Digital Trunk Interface	R	R	R	R	C	C
7.2.1	Supervisory Channel Associated Signaling	R	R	R	R	C	C
7.2.2	Alarm and Restoral Requirements	R	R	R	R	C	C
7.3	Interoperation of PCM-24 and PCM-30 Svstems	R	R	R	R	C	C
7.4	Analog Trunk Interface	C	C	C	C	C	C
7.4.1	E&M Trunk Circuits	C	C	C	C	C	C
7.4.2	Single Frequency (SF) Trunk Circuits	C	C	C	C	C	C
7.4.3	Dual Frequency (DF) Trunk Circuits	C	C	C	C	C	C
7.5	Integrated Digital Loop Carrier (IDLC)	R	R	R	R	C	C
	SECTION 8 - Tandem Switching						
8.1	Network Plan	R	R				
8.3	Tandem Capabilities	R	R				
8.4	Call Processing	R	R				
8.5	Signaling	R	R				
8.6	Transmission	R	R				
8.7	Measurements and Administration	R	R				
8.8	Service Standards	R	R				
8.9	Network Management (NM)	R	R				
	SECTION 9 - Network Management						
9.1	DISA Network Traffic Management Operating System (NTMOS)	R	R	R	R		
9.2.1.1	Data Quality	R	R	R	R		
9.2.2.1.1	Traffic Measurements	R	R	R	R		
9.2.2.1.2	Reference Data	R	R	R	C		
9.2.2.2	Line Servicing	R	R	R	C		

PARAGRAPH	SUBJECT	TS	MFS	EOS	SMEO	PBX1	PBX2
9.2.2.3	Trunk Groups	R	R	R	C		
9.2.2.4	Call Processor	R	R	R	C		
9.2.2.5	Switch Services	R	R	R	C		
9.2.2.6	Special Studies	R	R	R	C		
9.2.2.7	Remote Switching Site		C	C	C		
9.2.2.8	Features		C	C	C		
9.2.3	Common Channel Signaling Network (CCSN) Measurements	R	R	R	C		
9.2.4	ISDN Measurements	R	R	R	R		
9.2.5	Traffic Capacity	R	R	R	R		
9.3	Fault Management	R	R	R	R		
9.4	Configuration Management	R	R	R	R		
9.5.1	DSN Settable CDR Fields.		R	R	R		
9.5.2	Data Retention		R	R	C		
9.6.1	Automatic Controls	R	R	R	C		
9.6.1.1	Automatic Congestion Controls (ACC)	R	R	R	C		
9.6.1.2	Trunk Reservation (TRE)	R	R	R	C		
9.6.1.3	Selective Incoming Load Controls (SILC)	R	R	R	C		
9.6.1.4	Precedence Access Threshold (PAT)		C				
9.6.2.1	Essential Service Protection (ESP)	R	R	R	C		
9.6.3	Manual Controls	R	R	R	C		
9.6.3.1	Trunk Group Controls	R	R	R	C		
9.6.3.1.1	Cancel From (CANF)	R	R	R	C		
9.6.3.1.2	Cancel To (CANT)	R	R	R	C		
9.6.3.1.3	SKIP	R	R	R	C		
9.6.3.1.4	Reroute (RR)	R	R	R	C		
9.6.3.1.4.1	Single-Via-Route	R	R	R	C		
9.6.3.1.4.2	Multiple-Via-Route	R	R	R	C		

PARAGRAPH	SUBJECT						
		TS	MFS	EOS	SMEO	PBX1	PBX2
9.6.3.1.4.3	Overflow (ORR) vs Immediate Reroute (IRR)	R	R	R	C		
9.6.3.2	Code Controls	R	R	R	C		
9.6.3.2.1	Code Controls - Code Gapping Controls	R	R	R	C		
9.6.3.3	Total Office Manual Control Removal - Request/Response	R	R	R	C		
9.6.4	Treatment Options Of Calls That Are Terminated	R	R	R	C		
9.7	Remote Access to Switch	R	R	R	R		
	SECTION 10 - Integrated Services Digital Network (ISDN) Generic Requirements	**Refer to Tables in Section 10**					
	SECTION 11 - Synchronization						
11.1	Timing Modes	R	R	R	R		
11.1.1.1	External Timing Mode	R	R	R	C		
11.1.1.2	Line Timing Mode	R	R	R	R	R	
11.1.2.1	General	R	R	R	C		
11.1.2.2	Stratum 4 Clock				R	R	C
11.2	Synchronization Performance Monitoring Criteria	R	R	R	C	C	C
11.3	DS1	R	R	R	C	C	C
11.4	DS0 Traffic Interconnects	R	R	R	C	C	C
	Section 12 - Reliability	R	R	R	R	R	
	Section 13 - Security	R	R	R	R	R	

LEGEND:

TS - Tandem Switch
MFS Multifunction Switch
EOS - End Office Switch
SMEO - Small End Office
RSU - Remote Switch Unit
PBX1 Private Branch Exchange 1
PBX2 Private Branch Exchange 2
DVX - Deployed Voice Exchange
R Required / C Conditional

Appendix 2 - Deployable Voice Exchanges/Switch (DVX)

A2.1 Background

A2.1.1 Background

The Executive Agent for Theater Joint Tactical Networks (EA-TJTN), in consonance with responsibilities assigned by the Assistant Secretary of Defense for Command, Control, Communications, and Intelligence (ASD C3I), oversees, coordinates, and evaluates initiatives within the tactical networked-communications community of the Department of Defense (DoD) with the aim of establishing the predeployment interoperability of networked-communications systems used by joint forces during tactical contingency missions. In connection with those responsibilities, the US Military Communications-Electronics Board (MCEB) tasked the Theater Joint Tactical Network Configuration Control Board (TJTN-CCB), which is chaired by and advises the EA-TJTN, to develop a generic set of tactical interoperability requirements as certification criteria for joint networked-communications systems. In satisfying that task and to ensure interoperability requirements, test criteria, designs, and approaches are valid for the interoperability certification of systems destined to function in joint tactical networks, the TJTN-CCB has developed the DSSGR. The DSSGR establish evaluation requirements for legacy (Unit Level Circuit Switch [ULCS], Common Baseline Circuit Switch [CBCS], and TRI-TAC systems) and emerging circuit-switched systems (REDCOM, Lucent, AVAYA, etc.). Many things have changed since the initial fielding of TRI-TAC systems in the eighties. For one, the Office of the Secretary of Defense has directed that interoperability-certification requirements for circuit-switched systems now be articulated in a Joint Staff-approved Initial Capabilities Document (ICD) for Milestone A (formerly the Mission Need Statement [MNS]) and a Capabilities Development Document (CDD) for Milestone B and Capabilities Production Document (CPD) for Milestone C (formerly an Operational Requirements Document [ORD]) with regard to acquisitions. Key Performance Parameters (KPP) for CDDs and CPDs must address interoperability. In pursuing their acquisition initiatives, combatant commands (COCOMs), Services, and Defense agencies should use the DSSGR as a guideline for the purchase of commercial, off-the-shelf (COTS) equipment, as well for the development of systems that need to interface in deployed networks.

A2.1.2 Purpose

The purpose for developing the DSSGR as an appendix to the Defense Switch Network (DSN) Generic Switching Center Requirements (GSCR) document was to consolidate interoperability-certification requirements to the maximum extent possible and incorporate them as part of requirements for the overarching Global Information Grid (GIG) in support of network-centric warfare. Another purpose for including the DSSGR as part of the DSN GSCR was to amend the DSN GSCR so as to allow them to include deployed communication systems and to make available a total GIG interoperability-requirements package to submit to Joint Staff for approval. This appendix supports the overall DoD interoperability-assurance enterprise. It likewise supports Joint Interoperability Test Command (JITC) interoperability-certification testing by serving as a requirements reference for, not only legacy-system evaluations, but COTS Deployable Voice Exchange (DVX) assessments and certification tests. In order to eliminate redundancy in the overall DSN GSCR document with the inclusion of this appendix, the interoperability requirements for small end offices (SMEOs) are not covered in this appendix, as they appear in and may be obtained from the DSN GSCR base document, where the base document addresses requirements for SMEOs. That section provides basic guidance for satisfying the certification requirements for tactical voice systems employed as part of an Operational Area Network (OAN), which is the deployed part of the GIG. This appendix serves as a ready-reference that specifies OAN voice connectivity and interoperability-certification requirements and for introducing allied/coalition voice networks into the overall "infosphere" required for effective combined operations. The information provided herein is the product of a series of meetings held in Reston, Virginia, between EA-TJTN and Defense Information Systems Agency (DISA) DSN personnel, the efforts of the TJTN-CCB, the stipulations of CJCSI 6212.01B, and other interoperability-promoting publications.

A2.2 Applicability

This appendix applies to all deployable "Black" OAN voice-switched systems that are to be integrated into a deployed JTF network. The term "Black OAN voice-switched systems" refers to DVX voice-switched systems that do not operate within the Defense Red Switch Network (DRSN) or conform to its guidelines. Although DRSN-capable voice switches are deployed within the OAN, they operate via a DRSN gateway and within a separate infrastructure. Communications Security (COMSEC) and secure enclaves are the means of security protection imposed within the Black OAN infrastructure along with policy guidance and doctrinal procedures. The requirements in this appendix are also applicable for voice-switched systems that are about to be procured, installed, engineered, reengineered, modified (in terms of both software or hardware), or tested and become OAN network elements. The requirements are to be applied by the JITC or, for that matter, anyone else (vendors, life-cycle support activities, system proponents, etc.) in conducting joint interoperability testing (which may be part of an assessment process to facilitate later JITC certification).

A2.3 Deployment Context

A2.3.1 Voice Networks

In order to apply scenario and "string" criteria appropriately for interoperability-certification testing, a voice network must be established and have an architecture that is representative of the OAN within a typical COCOM joint tactical network. A communications structure in support of a notional deployed joint force must be established IAW joint doctrine within the context of a joint task force (JTF) network operating as the OAN within the Tier 0 through 4 environment and serving as the core infrastructure for a certification test effort. It should be noted that Tier 0 is the sustaining base, while Tier 1 is the Defense Information Systems Network, Tier 2 the Standardized Tactical Entry Point (STEP), Tier 3 the COCOM headquarters/Theater C4ISR Coordination Center, and Tier 4 the JTF backbone network. Annex A, Figure 1, provides a generic OAN voice-network diagram that depicts a notional JTF voice-system infrasturcture as it may appear during typical theater deployment. Such would be the environment where the requirements in this appendix would apply. Any deviation to accommodate a transition to new functional or switched-system technologies requires a reevaluation and possibly a change in the foregoing scheme of doing business, as well as a modification in current policies and standard operating procedures for effective test and evaluation.

A2.3.2 Deploved Voice Exchanges / Switch DVX's

DVX switches can be either COTS or legacy voice-switched systems. Mission requirements, functional capabilities, signaling, and doctrinal employment within a network dictate the appropriate positioning of these switches in a network. Deployed units draw necessary strategic support from STEP sites through either IDNXs or SMUs, depending on the signaling being used to access gateways into the DSN backbone. Annex C tables specify requirements and sub-requirements for interoperability certification of DVX switches (both legacy and COTS).

A2.3.3 Deployed Voice Exchanges / Access to DSN and/or Commercial Gateways

DVXs accessing DSN or commercial gateways, by doctrine, employ vertical and lateral connectivity from the DSN and commercial backbones. Satellite Access Requests/Gateway Access Requests (SAR/GAR) are used to identify access parameters for the target network. DSN and commercial gateway-configuration specifics can be found in CJCSI 6215.01B, dated 23 September 01: DISA JIEO Report 8249, dated March 97; the latest version of the GSCR document (currently under revision); and DCAC 370-175-13, dated April 1988 (currently under revision to become DISAC 370-175-13).

A2.4 Conclusion

Annex B maps requirements to paragraphs in the DSN GSCR, which are deemed applicable to deployed switching systems. The TJTN-CCB, as a joint body representing the deployed networked-communications community, will provide the Joint Staff with a recommendation to adopt the DSSGR and thereby establish evolutionary baseline requirements for joint interoperability certification of deployed switched systems. JITC as the joint interoperability-certification authority will apply these requirements with its test plans and network assessments. It should be noted that the DSN GSCR document and Generic Switch Test Plan (GSTP), dated August 200 1, are essential publications for the development of a generic set of requirements for use as the basis for interoperability testing.

ANNEXES:

A - Notional Voice Diagram

B - Voice Certification Requirements Table and Explanatory Information

ANNEX A

NOTIONAL VOICE DIAGRAMS

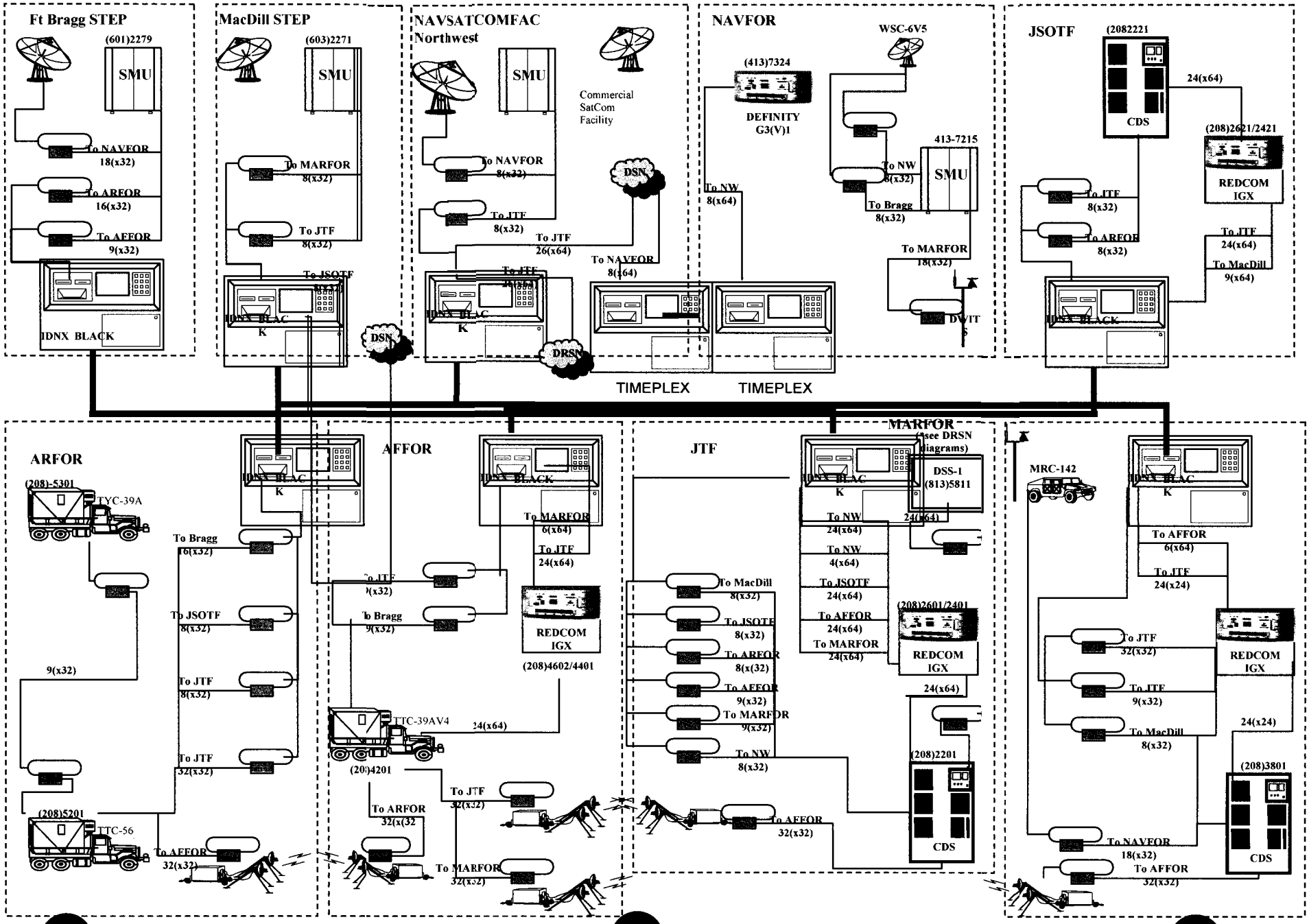

Figure A2-1. National Deployable Voice Network

ANNEX B

VOICE CERTIFICATION REQUIREMENTS
(ONLY DSN GSCR FUNCTIONAL REQUIREMENTS DEEMED APPLICABLE TO DEPLOYED SWITCHES ARE IN THIS TABLE)

Table A2-1: Voice Certification Requirements

ITEM NUMBER	PARAGRAPH IN GSCR	SUBJECT	TYPE OF SWITCHES	
			DVX/COTS	DVX/LEGACY
a	2.1.1	Individual Line	R	R
c	2.1.2	CLASS Feature: Selective Call Rejection	C	C
d	2.1.3	Denied Originating Service	C	C
e	2.1.4	Code Restriction and Diversion	R	C
f	2.1.5.1	Call Waiting (CW)	C	C
g	2.1.5.2	Cancel Call Waiting	C	C
h	2.1.6	Three- Way Calling (T WC)	C	C
i	2.1.7	Add-On-Transfer and Conference Calling Features	C	C
J	2.1.7.1	Call Transfer Individual - All Calls	C	C
k	2.1.7.2	Call-Transfer - Internal Only	C	C
l	2.1.7.3	Call Transfer - Individual - Incoming Only/Add-on Consultation Hold - Incoming Only	C	C
m	2.1.7.4	Call Transfer - Outside	C	C
n	2.1.7.5	Call Transfer-Add-on to Fully Restricted Station	C	C
o	2.1.7.6	Call Transfer Attendant	C	C
p	2.1.7.7	Call Hold	C	C
q	2.1.7.8	Conference Calling - Six Way Station Controlled	C	C
r	2.1.8.1	Call Forwarding Variable	C	C

s	2.1.8.2	Call Forwarding Busy Line (CFBL)	C	C
t	2.1.8.3	Call Forwarding Don't Answer All Calls	C	C
u	2.1.8.4	CLASS Feature: Selective Call Forwarding	C	C
v	2.1.9.1	Call Pick-Up	C	C
w	2.1.9.2	Directed Call Pick-Up	C	C
x	2.1.9.3	Directed Call Pick-Up without Barge-In	C	C

ITEM NUMBER	PARAGRAPH IN GSCR	SUBJECT	TYPE OF SWITCHES	
			DVX/COTS	DVXJLEGACY
a	2.2.1	Precedence and Preemption	C	C
b	2.2.2	Call Display	C	C
c	2.2.3	Class of Service Override	C	C
d	2.2.4	Busv Override and Busv Verification	C	C
e	2.2.5	Night Service	C	C
f	2.2.6	Automatic Recall of Attendant	C	C
g	2.2.7	Calls in Queue to the Attendant	C	C
a	2.3.1	PBX Line	C	C
b	2.3.2	Direct Inward Dialing (DID)	C	C
c	2.3.3	National ISDN 1/2 Basic Access	R	C
d	2.3.4	National ISDN 1/2 Primary Access	R	C
e	2.3.5	Analog Line	C	C
a	2.4.1	Basic Emergency Service (911)	C	C
b	2.4.2	Tracing of Terminating Calls	R	R
c	2.4.3	Outgoing Call Tracing	R	R
d	2.4.4	Tandem Call Trace	R	R
e	2.4.5	Trace of A Call in Progress	R	R
1a	2.5.1.1	100-Type Test Line	R	R
b	2.5.1.2	10 1 -Type Test Line	C	C
c	2.5.1.3	102-Type Test Line	C	C
d	2.5.1.4	105-Type Test Line	C	C
e	2.5.1.5	Synchronous Test Line	C	C
f	2.5.1.6	Non-synchronous Test Line	C	C
g	2.5.1.7	Permanent Busy Test Line	C	C
h	2.5.1.8	108-Type Test Line	C	C

i	2.5.2.1	Dialable Cable Pair Locator Tone	C	C
j	2.5.2.2	DTMF Station Test Circuit	C	C
k	2.5.3	Test Incoming Trunks in Tandem or Local State	C	C
l	2.5.4.1	Manual Test of Line	R	R
m	2.5.4.2	Manual Test of Trunks	R	R
n	2.5.5	Trunk Group - Remove from Service (Make Busy)	R	R
o	2.5.6	Trunk Group - Restore to Service (Make Idle)	R	R
p	2.5.7	Carrier Group Alarm (CGA)	R	R
q	2.5.7.1	Software Carrier Group Alarm	C	C

ITEM NUMBER	PARAGRAPH IN GSCR	SUBJECT	TYPE OF SWITCHES	
			DVX/COTS	DVX/LEGACY
a	2.6.1	Conference Notification Recorded Announcement	C	C
b	2.6.2	Automatic Retrial and Alternate Address	C	C
c	2.6.3	Bridge Release	R	R
d	2.6.4	Secondary Conferencing	R	R
a	3.1.1	Description	R	R
b	3.1.2	Precedence Levels	R	R
c	3.1.3	Announcements	C	C
d	3.1.4	Invocation and Operation	R	R
a	3.2.1	Network Facilities Active With Lower Precedence Calls	R	R
b	3.2.1.1	CANCEL to (CANT)/CANCEL from (CANF)	C	C
c	3.2.2	Network Facilities Active With Equal or Higher Precedence Call	C	C
d	3.2.3	MLPP Trunk Selection (Hunting)	R	R
e	3.2.3.1	Hunt Sequence for Trunks	R	R
f	3.2.3.1.1	ROUTINE Calls	R	R
g	3.2.3.1.2	Precedence Calls Above ROUTINE	R	R
h	3.2.3.1.2.1	Method 1	R	R
i	3.2.3.1.2.2	Method 2	C	C

j	3.2.4.1	Calls From non-MLPP Networks	R	R
k	3.2.4.2	Precedence Calls to Non-MLPP Networks	R	R
a	3.4.1	Channel Associated Signaling (CAS)	R	R
b	3.4.2	Primary Rate Interface (PRI)	R	N/A
c	3.4.3	Common Channel Signaling Number 7 (CCS7)	C	N/A
d	3.5.1	Busy At The Called Party's Interface	R	R
e	3.5.1.1	Line Active With A Lower Precedence Call	R	R

ITEM NUMBER	PARAGRAPH IN GSCR	SUBJECT	TYPE OF SWITCHES	
			DVX/COTS	DVX/LEGACY
f	3.5.1.2	Line Active With An Equal or Higher Precedence Call Above Routine	C	C
a	3.6.2.1	Line Active With A Lower Precedence Call	R	N/A
b	3.6.2.2	Line Active With An Equal or Higher Precedence Call	R	N/A
c	3.6.3	Single B-Channel, Multiple Appearances, Single Directory Number (DN)	R	N/A
d	3.6.4	Two (2) B-Channels, Multiple Appearances, Single Directory Number (DN)	R	N/A
c	3.6.5	Two B-Channels, 2 Directory Numbers (DN)	R	N/A
	3.7	ISDN MLPP (PRI)	R	N/A
d	3.7.2	Precedence Level Information Elements	R	N/A
e	3.7.3	Disconnect Message Information Cause Values	R	N/A
f	3.7.4	Signal Information Element	R	N/A
g	3.7.5	ANSI T1.619a Setup Message Called Party Number Format	R	N/A
h	3.7.6	ANSI T1.619a and non-T1.619a Interaction	R	N/A
a	3.8.1	Precedence Call Waiting	C	C
b	3.8.1.1	Busy with higher precedence call	C	C
c	3.8.1.2	Busy with equal precedence call	C	C
d	3.8.1.3	Busy with lower precedence call	C	C

e	3.8.1.4	No Answer	C	C
f	3.8.2	Call Forwarding	C	C
g	3.8.2.1	Call Forwarding at a busy station	C	C
h	3.8.2.2	Call Forwarding – no reply at called station	C	C
i	3.8.3	Call Transfer	C	C
j	3.8.3.1	Call Transfer interaction at different precedence levels	C	C
k	3.8.3.2	Call Transfer interaction at same precedence levels	C	C
l	3.8.4	Call Hold	C	C
m	3.8.5	Three-Way Calling (TWC)	C	C
n	3.8.6	Call Pick-Up	C	C
o	3.8.7.1	Conference Precedence Level	C	C

ITEM NUMBER	PARAGRAPHIN GSCR	SUBJECT	TYPE OF SWITCHES	
			DVX/COTS	DVX/LEGACY
p	3.88	Multiline Hunt Service	C	C
q	3.8.9	Community of Interest (COI)	C	N/A
r	3.8.9.2.1	COI screening treatment for originating call requests	C	N/A
s	3.8.9.2.2	COI screening treatment for terminatinn call requests	C	N/A
[redacted]				
a	3.9.3	Look Ahead For Busv	C	N/A
b	3.9.4	Precedence Parameters	C	N/A
c	3.9.4.1	Actions Required at Originating Exchange	C	N/A
d	3.9.4.2	MLPP CCS7 Transaction Capability Annlication Part (TCAP)	C	N/A
e	3.9.4.2.1	Parameters	C	N/A
f	3.9.4.2.1.1	Bearer Capability Supported – 1001001	C	N/A
g	3.9.4.2.1.2	Circuit Identification Code – 10011010	C	N/A
h	3.9.4.2.1.3	Call Reference 100 11100	C	N/A
i	3.9.5	Release Message cause Values	C	N/A
j	3.9.6	DSN MLPP CCS7 IAM	C	N/A
[redacted]				
a	3.11.1	Electronic Key Telephone Systems (EKTS)	C	N/A
b	3.11.1.1	Call Appearances	C	N/A

c	3.11.1.2	Hold	C	N/A
d	3.11.1.3	DN Bridging	C	N/A
e	3.11.1.4	Intercom Calling	C	N/A
f	3.11.1.5	Abbreviated Or Delayed Ringing Treatment On Incoming Calls	C	N/A
g	3.11.1.6	Bridged Call Exclusion (BCE)	C	N/A
h	3.11.1.7	Non-ISDN Users	C	N/A
i	3.12.1	Precedence Parameter	C	C
j	3.12.2	Cause Values & Location Codes	C	C
k	3.13	Network Management	C	C
l	3.14	Data Collection	R	C
a	4.1.1	Origination Treatment	R	R
b	4.1.1.1	Originating Busy	R	R
c	4.1.2	Termination Treatment	R	R
d	4.1.2.1	Busy or Idle Status	R	R
e	4.1.3	Release Treatment	R	R
f	4.1.4	Interruption Treatment	R	R

ITEM NUMBER	PARAGRAPH IN GSCR	SUBJECT	TYPE OF SWITCHES	
			D V X /CO TS	DVX/LEGACY
g	4.1.5	Connections	R	R
h	4.1.6	Class of Service	R	R
i	4.2	Primary and Alternate Routing	R	R
j	4.3.1	Ear & Mouth (E&M) Lead Signaling States	R	R
k	4.3.2	Four-Wire Analog User Access Lines	C	C
l	4.3.3	Two-Wire User Access Lines	C	C
m	4.3.4.1	Busy/Idle Status	R	R
n	4.4.1	Originating Call Processing	R	R
o	4.4.2	Terminating Call Processing	R	R
a	4.5.1.1	DSN User Dialing	R	R
b	4.5.1.2	Interswitch and Intraswitch Dialing	R	R
c	4.5.1.2.1	Seven-Digit Dialing	R	R
d	4.5.1.2.2	Ten-Digit Dialing	R	R
e	4.5.1.3	Access Code	R	R
f	4.5.1.3.1	Access Digit	R	R
g	4.5.1.3.2	Precedence Digit	R	R
h	4.5.1.3.3	Service Digits	R	R
i	4.5.1.4	Route Code	R	R
j	4.5.1.5	Area Code	R	R
k	4.5.1.6	Switch Code	R	R

l	4.5.1.7	Line Number	R	R
m	4.5.1.8	Emergency Service 911 Conflict Resolution	R	R
n	Table 4-9	DSN Switch MFR1 Outpulsing Digit Format	C	C
o	Table 4-10	DSN Switch DTMF Outpulsing Digit Format	R	R
p	4.5.2.1	Route Control Digit (RCD)	N/A	N/A
q	4.5.3	Standard Directory Numbers	R	R
r	4.5.4	Standard Test Numbers	R	R
s	4.5.5	Base Services - Abbreviated Numbers	R	R
t	4.5.6	Digit Reception Requirements	R	R
u	4.5.7	Digit Registration Canacitv	R	R

ITEM NUMBER	PARAGRAPH IN GSCR	SUBJECT	TYPE OF SWITCHES	
			DVX/COTS	DVX/LEGACY
[illegible]	[illegible]	[illegible]	[illegible]	[illegible]
a	4.5.8.1	Zone Restriction Servicing of Local Orininators	R	R
[illegible]	[illegible]	[illegible]	[illegible]	[illegible]
a	5.1	Network Power Systems for External Interfaces	R	R
b	5.2.1	Loop Start Line	R	C
c	5.2.2	Ground Start Line	R	C
d	5.3.1	Reverse Battery (RB)	R	C
e	5.3.2	Immediate Start	C	C
f	5.3.3.1	Normal Wink Start Operation	R	R
g	5.3.3.2	Glare Operation	R	R
h	5.3.3.3	Abnormal Operation	R	R
i	5.3.3.3.1	Wink Start	R	R
j	5.3.3.3.2	Glare Resolution	R	R
k	5.3.4	Delay Dial	C	C
l	5.3.5	Call for Service Timing	R	R
m	5.3.6	Guard Timing	R	R
n	5.3.7	Satellite Interface	R	R
o	5.3.8	Disconnect Control	R	R
p	5.3.9	Reselect or Retrial	R	R
q	5.3.10	Off-Hook Supervision Transitions (Unexpected Stop)	R	R
r	5.4.1	Dial-Pulse (DP) Signals	R	R
s	5.4.2	Dual Tone Multi-Frequency (DTMF) Signaling	R	R
t	5.4.2.1	Standard Digit Format for Precedence	C	C
u	5.4.3	MF (R1) 2/6 Signaling	C	C
v	5.5.1	Ringing	R	R
w	5.5.2	DSN Information Signals	R	R

ITEM NUMBER	PARAGRAPHIN GSCR	SUBJECT -	TYPE OF SWITCHES	
			DVX/COTS	DVX/LEGACY
a	5.6.1	CCS7 Network Structure	C	N/A
b	5.6.2	Functional Description of the Signaling System Message Transfer Part (MTP)	C	N/A
c	5.6.2.1	Signaling System Structure - Functional Levels	C	N/A
d	5.6.2.1.1	Signaling Data Link Functions (Level 1)	C	N/A
e	5.6.2.1.2	Signaling Link Functions (Level 2)	C	N/A
f	5.6.3.1	Routing Label	C	N/A
g	5.6.3.2	Handling Messages Under Signaling Link Congestion	C	N/A
h	5.6.3.3	Message Discrimination and Distribution Functions	C	N/A
i	5.6.3.4	Signaling Network Management	C	N/A
j	5.6.3.5	Changeback	C	N/A
k	5.6.4	Noncircuit-Related Information Exchange - Signaling Connection Control Part (SCCP)	C	N/A
l	5.6.5	Additional Procedures for Switch-to-Switch/SCP TCAP Messages	C	N/A
m	5.6.6	Message Transfer Part (MTP) Restart	C	N/A
n	5.6.7	Signaling Link Management	C	N/A
o	5.6.8	Signaling Route Management	C	N/A
p	5.6.9.1	Service Indicator	C	N/A
q	5.6.9.2	Subservice Field	C	N/A

ITEM NUMBER	PARAGRAPH IN GSCR	SUBJECT	TYPE OF SWITCHES	
			DVX/COTS	DVXLEGACY
R	5.6.10	Formats and Codes of Signaling Network Management Messages	C	N/A
s	5.6.11	Numbering of Signaling Point Codes	C	N/A
u	5.6.12.2	End-to-End Signaling	C	N/A
v	5.6.13	Formats and Codes - Integrated Services Digital Network (ISDN) User Part Parameters	C	N/A
w	5.6.13.1	Notification Indicator	C	N/A
x	5.6.13.2	IS-UP Messages	C	N/A
y	5.6.13.3	IS-UP Parameters	C	N/A
z	5.7.1.1	Application	R	N/A
aa	5.7.1.2	Physical Layer	R	N/A
bb	5.7.1.2.1	S/T Reference Point	R	N/A
cc	5.7.1.3	Data-Link Layer	R	N/A
dd	5.7.1.3.1	Data-Link Connections	R	N/A
ee	5.7.1.3.2	Peer-to-Peer Procedures of the Data-Link Layer	R	N/A
ff	5.7.1.4	Layer 3 DSN User-to-Network Signaling	R	N/A
gg	5.7.1.4.2	DSN User-to-Network	R	N/A

		Signaling for Circuit-Switched (CS) Bearer Service		
hh	5.7.1.4.3	Sequence of Messages for DSN Circuit-Switched (CS) Calls	R	N/A
ii	5.7.1.4.4	Message Functional Definitions and Content	R	N/A
jj	5.7.1.4.5	General Message Format and Info Elements (IE) Coding	R	N/A
kk	5.7.1.4.6	Supplementary Services	C	N/A

ITEM NUMBER	PARAGRAPH IN GSCR	SUBJECT	TYPE OF SWITCHES	
			DVX/ COTS	DVX/LEGACY
a	6.0	DISN/DSN Transmission Interface	R	R
b	6.1	Input Impedance	R	R
c	6.2	Inserted Connection Loss	R	R
d	6.2.1	Average Loss at 1004 hz and loss control	R	R
e	6.2.2	Loss Variability at 1004 hz	R	R
f	6.2.3	Attenuation Distortion	R	R
g	6.2.4	Tracking Error	R	R
h	6.3	Frequency Response	R	R
i	6.4	Overload Level	R	R
j	6.5	Return Loss	R	R
k	6.5.1	Two-Wire Line Return Loss	R	R
l	6.5.2	Four- Wire Trunk Return loss (Impedance)	R	R
m	6.6	Longitudinal Balance	R	R
n	6.7	60 Hz Longitudinal Current	R	R
o	6.8	Idle Channel Noise	R	R
p	6.8.1	C-Message Weighting	R	R
q	6.8.2	Flat Weighting Noise	R	R
p	6.9	Power Line Interference	R	R
r	6.10	Impulse Noise	R	R
s	6.11	Crosstalk Coupling	R	R
u	6.12	Intermodulation	R	R

		Distortion		
t	6.13	Signal to Distortion Ratio (C-Notched Noise)	R	R
u	6.14	Absolute Delay	R	R
v	6.15	Envelope Delay Distortion	R	R
w	6.15.1	Echo Path delay	R	R
x	6.16	Bit Integrity	R	R
y	6.17	Switched Digital Bit Error Rate	R	R
z	6.18	Encoding and Decoding Levels	R	R
aa	6.18.1	DSN Fixed Loss Plan	R	R
bb	6.18.1.1	Switch Transmission Level Points (TLPs)	R	R
a	7.1	PCM-24 Digital Trunk Interface	R	R
b	7.1.1	Interface characteristics	R	R
c	7.1.2	Supervisory Channel Associated Signaling	R	R
d	7.1.3	Clear Channel Capability (CCC)	R	R
e	7.1.4	Alarm and Restoral Requirements	R	R
f	7.2	PCM-30 Digital Trunk Interface	R	R
g	7.3	Interoperation of PCM-24 and PCM-30 Systems	R	R

ITEM NUMBER	PARAGRAPH IN GSCR	SUBJECT	TYPE OF SWITCHES

			DVX/ COTS	DVX/LEGACY
[redacted]				
a	7.4.1	E&M Trunk Circuits	R	R
b	7.4.2	Single Frequency (SF) Trunk Circuits	R	R
c	7.4.3	Dual Frequency (DF) Trunk Circuits	R	R
d	7.5	Integrated Digital Loop Carrier (IDLC)	R	R
[redacted]				
a	8.3	Tandem Canabilities	C	C
b	8.4	Call Processing	C	C
c	8.5	Signaling	C	C
d	8.6	Transmission	C	C
27	8.7	Measurements and Administration		
a	8.8	Service Standards	C	C
b	8.9	Network Management (NM)	C	C
[redacted]				
a	9.1	DISA Network Traffic Management Operating System (NTMOS)	R	C
b	9.2.1.1	Data Oualitv	R	R
c	9.2.2.1.1	Traffic Measurements	R	R
d	9.2.2.1.2	Reference Data	C	C
e	9.2.2.2	Line Servicing	C	C
f	9.2.2.3	Trunk Groups	C	C
g	9.2.2.4	Call Processor	C	C
h	9.2.2.5	Switch Services	C	C

i	9.2.2.6	Special Studies	C	C
J	9.2.2.7	Remote Switching Site	C	C
k	9.2.2.8	Features	C	C
1	9.2.3	Common Channel Signaling Network (CCSN) Measurements	C	N/A
m	9.2.4	ISDN Measurements	R	N/A
n	9.2.5	Traffic Capacity	R	R
0	9.3	Configuration Management	R	R

ITEM NUMBER	PARAGRAPH IN GSCR	SUBJECT	TYPE OF SWITCHES	
			DVX/COTS	DVX/LEGACY
a	9.5.1	DSN Settable MDR Fields	R	C
b	9.5.2	Data Retention	C	C
c	9.6.1	Automatic Controls	C	C
d	9.6.1.1	Automatic Congestion Controls (ACC)	C	C
e	9.6.1.2	Trunk Reservation (TRE)	C	C
f	9.6.1.3	Selective Incoming Load Controls (SILC)	C	C
g	9.6.2.1	Essential Service Protection (ESP)	C	C
h	9.6.3	Manual Controls	C	C
i	9.6.3.1	Trunk Group Controls	C	C
j	9.6.3.1.1	Cancel From (CANF)	C	C
k	9.6.3.1.2	Cancel To (CANT)	C	C
l	9.6.3.1.3	SKIP	C	C
m	9.6.3.1.4	Reroute (RR)	C	C
n	9.6.3.1.4.1	Single-Via-Route	C	C
o	9.6.3.1.4.2	Multiple-Via-Route	C	C
p	9.6.3.1.4.3	Overflow (ORR) vs Immediate Reroute (IRR)	C	C
q	9.6.3.2	Code Controls	C	C
r	9.6.3.2.1	Code Controls - Code Gapping Controls	C	C
s	9.6.3.3	Total Office Manual Control Removal - Request/Response	C	C
t	9.6.4	Treatment Options Of Calls That Are Terminated	C	C
u	9.7	Remote Access to Switch	R	C
v	9.8	Accounting Management Data	C	C

ITEM NUMBER	PARAGRAPH IN GSCR	SUBJ	TYPE OF SWITCHES	
			DVX/COTS	DVX/LEGACY
[redacted]				
a	11.1	Timing Modes	R	R
b	11.1.1	External Timing Mode	R	R
c	11.1.2	Internal Clock Requirements	R	R
d	11.1.2.1	General	C	C
e	11.1.2.2	Stratum 4 Clock	R	R
f	11.2	Synchronization Performance Monitoring Criteria	C	C
g	11.3	DS1	C	R
h	11.4	DSO Traffic Interconnects	C	R
[redacted]				

Legend:
R- Requirement. Must be met for certification

C- C onditional Requirement. If this feature or capability is provided, the switch shall perform and meet the specifications as identitfied in this GSCR.

N/A- Functional area does not apply for this switch type.

APPENDIX 3

GENERIC SWITCHING CENTER REQUIREMENTS (GSCR) 08 SEP 03 DSN VOICE OVER INTERNET PROTOCOL (VOIP) REQUIREMENT

Phase 1

A3.1 Backmound

This appendix describes the requirements that will be used to certify Voice over Internet Protocol (VoIP) Phase 1 for Defense Switched Network (DSN) applications. Where conflicts between this appendix and the body of the GSCR arise, the GSCR body takes precedence. This appendix applies to both converged and non-converged networks, but does not address the impact of prioritized voice on data applications and video services. This appendix addresses a wired LAN, but does not address wireless LANs. In addition, the appendix does not address how VoIP should be implemented in the presence of firewalls. Finally, the appendix does not address migration strategies for legacy systems and approaches for integrating VoIP with an existing C/P/S infrastructure. Future revisions of this appendix may address these voids based on the customer and industry feedback. The requirements contained in this appendix are based on:

a. Policy for DOD voice networks as outlined in the Chairman of Joint Chiefs of Staff Instruction (CJCSI) 6215.01B, "Policy for Department of Defense Voice Networks."

b. The Defense Information Systems Agency (DISA), Joint Interoperability and Engineering Organization (JIEO), Technical Report 8249, "Defense Information Systems Network (DISN) Circuit Switched Subsystem, Defense Switched Network (DSN) Generic Switching Center Requirements (GSCR)," March 1997.

d. DISA, NS533, "GSCR," 08 September 2003 (draft).

CJCSI 62 15.01B defines the DSN as being "an interbase non-secure/secure or C2 telecommunications system that provides end-to-end command use and dedicated telephone service, voice-band data, and dial-up VTC for C2 and non-C2 DOD authorized users in accordance with national security directives." The CJCS instruction further specifies the need for the DSN to offer military unique features (MUFs) such as Multi-level Precedence and Preemption (MLPP) and military Network Management (NM).

DISA has been delegated the authority for both system management and engineering of the DSN. The requirements for certification of DSN switching systems are outlined in the GSCR document. Certification of switching systems by the Joint Interoperability Test Command (JITC) is primarily based on the GSCR. For use within the DSN, systems will be certified in accordance with their placement within the DSN architecture: Tandem Switch (TS), Multifunction Switch (MFS), End Office (EO), Small End Office (SMEO), Private Branch Exchange 1 (PBX 1) - with MLPP and PBX 2 - without MLPP. This appendix deals with the requirements for the following Phase 1 VoIP systems:

a. Command and Control Voice Grade LAN (C2VGLAN), i.e., one capable of supporting MLPP and used in MFS, EO, SMEO, and PBX1 applications.

b. Voice Grade LAN (VGLAN), i.e., a non-C2 LAN for PBX2 applications.

VoIP implementation within the DSN will take place in two major phases:

a. Phase 1 involves IP islands interconnected via the traditional DSN, which consists of circuit-switched systems and TDM transmission facilities. As such, the existing non-IP systems provide for the standardized interoperability between various IP-based systems.

b. Phase 2 involves full network-wide IP interoperability and replaces the traditional circuit-switch and TDM technology.

This version of Appendix 3 only addresses Phase 1.

A3.1.1 Definitions

a. C2 VGLAN. The C2VGLAN is defined as the IP network infrastructure components used to provide C2 voice services to an IP telephony subscriber. It applies to switch certifications for MFS, EO, SMEO and PBX1.

b. Converged Network. An IP network used to transmit a combination of voice, video, and/or data services. The converged definition applies to a singular camp, post or station IP network that will be used to provide IP services along with the addition of DSN VoIP services.

c. Internet Protocol (IP) Centric. IP centric architectures are designed around an IP core packet switching system. These solutions have distributed IP devices that function together to perform the functions of a circuit switch as shown in Figure 1. For IP centric solutions, the connectivity to the rest of the DSN architecture shall be via the interfaces mandated by the GSCR, e.g., Integrated Services Digital Network (ISDN) Primary Rate Interface (PRI) or Signaling System 7 (SS7), not IP. IP centric solutions shall be tested IAW the GSCR for specific switch type applications.

Initially, analog phones, STE and STU instruments, facsimile devices, video equipment, and modems may terminate directly on the VoIP Gateway, as shown in Figure 1. However, future versions of this appendix will require these devices to terminate on an IP access device (IAD) connected to an Ethernet access switch in order to connect to the VoIP Gateway.

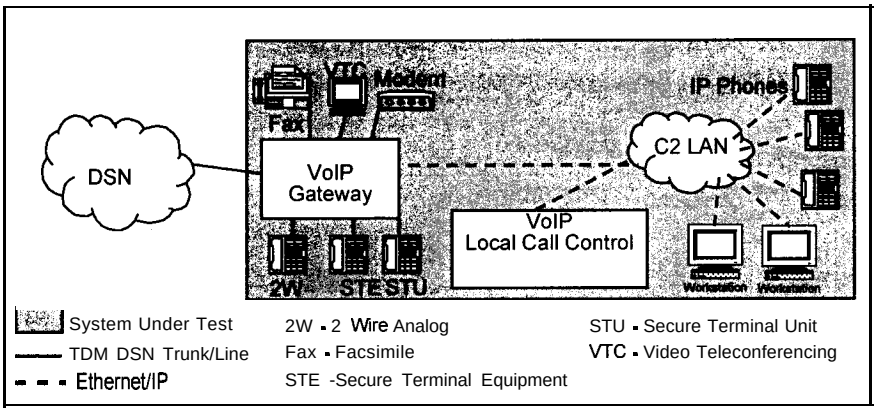

Figure 1. Depiction of IP Centric Architecture

d. IP enabled. The IP enabled approach utilizes traditional time division multiplexing (TDM) circuit switches that offer VoIP as a line instrument. This solution has a TDM circuit switch as the core device with VoIP being provided as a line function similar to other analog or digital telephony instruments as shown in Figure 2. The requirements of the GSCR for non-secure/secure voice, data, VTC and facsimile are primarily met via the circuit switch portion. The DSN interface requirements (T1/E1, etc) are provided via the circuit switch and the connectivity to the IP LAN is via Ethernet. IP enabled architectures can be certified for PBX through MFS applications. A VoIP Gateway is not shown in Figure 2 because it is usually built into the TDM circuit switch.

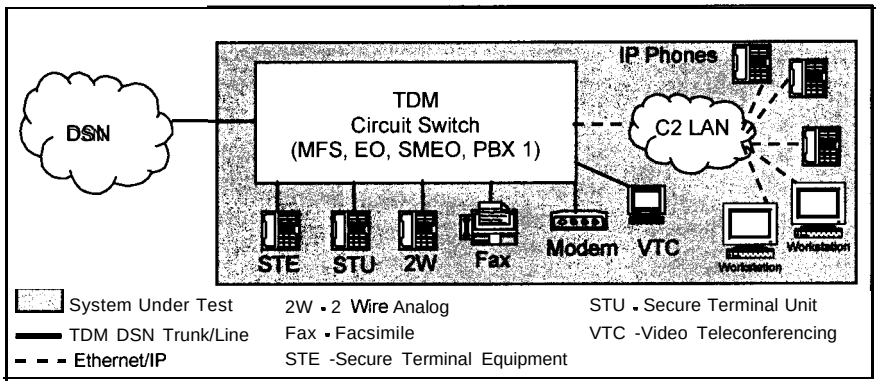

Figure 2. Depiction of IP Enabled Architecture.

e. IP Telephony subscriber. A DSN C2 or non-C2 user that receives voice service via an IP telephone instrument.

f. IP Data User. A user connected to an IP network to receive DOD IP services such as data and IP video; DSN IP telephony is not included.

g. LAN Network Links. Network links are defined as those internal IP/Ethernet links that interconnect LAN components.

h. Link Pair. To ensure no single point of failure to more than 64 IP telephony subscribers, IP network links shall have a second link (standby or load sharing). The combination of the two links is called a 'link pair'

i. Non-blocking LAN. Within the C2VGLAN, all provisioned IP phone instruments can be simultaneously off hook and successfully engaged in a full duplex voice call.

j. Non-converged Network. A non-converged network is defined as being a network that is used solely to provide DSN VoIP services. A separate IP network will be used to provide IP data services.

k. SUT. The system under test (SUT) is defined as the inclusive components required to meet a DSN switch certification (i.e., MFS, EO, etc.). Examples of a SUT are TDM or circuit switch components, VoIP system components (e.g., local call controller and gateway), LAN components (e.g., routers and Ethernet switches), and end instruments.

1. Trunks. Trunks are defined as being the Time Division Multiplexing links used by a circuit switch or VoIP system to connect to or interconnect DSN switches.

m. VGLAN. The Voice Grade LAN is defined as the IP network infrastructure required to provide non-MLPP IP voice services. The VGLAN applies only to PBX 2 switch certifications.

n. VoIP System. A VoIP system is defined as those components required to provide DSN IP voice services from end instrument to DSN trunk, or IP phone to IP phone. The VoIP system includes but is not limited to: the IP telephony instrument, LAN, local call controller, and IP gateway.

A3.1.2 Approach

The requirements contained within this appendix are a supplement to the main body of the GSCR to address VoIP unique requirements. The SUT will be required to meet the pertinent GSCR requirements defined for each of the switch types. For VoIP systems that wish to be certified to provide switching systems functions, in addition to the GSCR switching system requirements, the VoIP system requirements and appropriate IP LAN (C2VGLAN or VGLAN) requirements contained within this appendix also apply. The requirements nomenclature used within this appendix is consistent with the main body of the GSCR with the addition of LAN applicability. Paragraphs may caveat requirements that apply specifically to converged versus non-converged LANs. Requirements specified for C2VGLAN and VGLAN are meant to apply to both converged and non-converged LANs). Examples of nomenclature follow.

a. SUT applicability. Requirements that apply to be certified for switch type (MFS to PBX). **[REQUIRED: TS, EOS, MFS, SMEO, PBX1 - CONDITIONAL: PBX2]**.

b. LAN applicability. Requirements that are applicable to the LAN for both converged and non-converged applications used to distribute IP voice services. **[REQUIRED: C2VGLAN - CONDITIONAL: VGLAN] .**

c. Network type applicability. Those requirements that apply specifically to converged or non-converged networks. **[REQUIRED: C2VGLAN (converged) - CONDITIONAL: C2VGLAN (non-converged), VGLAN].**

A3.1.3 Certification

IP solutions will be certified IAW the GSCR (08 September 2003) and this appendix. To be certified switching platforms shall meet the physical interface and feature/capability requirements. Current interface requirements by switch type are provided in Enclosure A. Feature/capability requirements by switch type are provided at Enclosure B. For VoIP solutions, this appendix contains LAN architecture examples that will be used in the DSN interoperability test certifications.

A3.1.3.1 IP Enabled

The same functionality received today by telephony subscribers, including MLPP, will be provided by IP enabled equipment. Since no approved standards exist for the provision of MLPP in an IP environment, vendors may temporarily provide proprietary solutions in order to meet the MLPP functionality. The ability of the equipment in the C2VGLAN to provide voice services IAW DOD requirements will be tested using JITC's Generic Switch Test Plan (GSTP) in conjunction with the circuit switch portion of the solution. Upon meeting the requirements, JITC will issue an appropriate letter of certification (e.g., MFS, EO, SMEO, PBX1, or PBX2) for the combined TDM & IP equipment.

A3.1.3.2 IP Centric

IP Centric solutions will be required to meet the current interfaces IAW the GSCR (Enclosure A). Current requirements for secure voice, secure/non-secure facsimile and video teleconferencing (VTC) shall also be provided by the IP Centric solution. To be certified for joint use, the IP Centric VoIP system will be required to interface to existing DSN circuit switches at the MFS, EO or SMEO level via an approved DSN interface type.

A3.2 VoIP System Requirements

A3.2.1 Voice Quality

[REQUIRED: TS, EOS, MFS, SMEO, PBX1, PBX2] For VoIP LAN systems used in DSN, the voice quality shall have a mean opinion score (MOS) of 4.0 or better, as measured in accordance with JTA voice quality standards. This applies from handset to handset, and from handset to gateway trunk to the DSN.

A3.2.2 Coder/Decoder (CODEC)

[REQUIRED: TS, EOS, MFS, SMEO, PBX1, PBX2] The term codec is an acronym for "coder/decoder" or is also sometimes known as "compressor/decompressor." The codec takes one format of audio signal and encodes it into some other digital format with an algorithm (i.e., the encoding). It also decodes the same data, reconstructing the format. The International Telecommunications Union Telecommunication Standardization Sector (ITU-T) has developed the G.7xx series of recommendations for codecs for different data rates and voice qualities. **For a VoIP LAN system used in the DSN, the G.711 Pulse-Code Modulation (PCM) codec shall he used. No voice compression technique of any type shall be used within the DSN.**

A3.2.3 Multi-level Precedence & Preemption (MLPP)

[REQUIRED: TS, EOS, MFS, SMEO, PBX1 - CONDITIONAL: PBX2] The VoIP telephony system shall meet all MLPP requirements identified in Section 3 of this GSCR. Therefore, the C2VGLAN shall also be capable of processing MLPP calls. Since no complete set of standards exists for MLPP over IP, vendors may initially implement proprietary protocols in the C2VGLAN to ensure the complete MLPP functionality as detailed in section 3 of the GSCR is provided to the DSN IP telephony subscriber.

A3.2.4 Security

[REQUIRED: TS, EOS, MFS, SMEO, PBX1, PBX2] With the advent of VoIP technology, the basic security requirements for all switches remains the same, but additional measures must be applied to secure the DSN from threats that predominately have been the domain of the data networks realm. The European Telecommunications Standards Institute, in conjunction with the ITU-T, have produced two documents describing the threats to the TIPHON (Telecommunications and Internet Protocol Harmonization over Networks) VoIP model, a general VoIP scenario, and described the countermeasures that can minimize the risk to VoIP systems to an acceptable level. The TIPHON scenario is a general model that applies to SIP, H.323, BICC, and other VoIP signaling and transport protocols. ETSI Technical Specification 102 165-l (v4.1.1) provides a threat analysis for VoIP architectures, with specific reference to SIP and H.323 in Annexes A and B, respectively. This document describes the likelihood and potential impact of various threats to security services and describes the resulting risk factor for the various threats to VoIP. ETSI Technical Specification 102 165-2 (v4.1.1) provides a detailed description of countermeasures that, if implemented properly, can reduce the overall risk of operating a VoIP solution. The list of countermeasures includes authentication, access control, and confidentiality methods. The implementation of these methods can reduce risk. However, each countermeasure also introduces new threats to the system by adding complexity. In some instances, a specific countermeasure cannot be applied to a particular technology. **All VoIP systems shall be designed and implemented in a way that acknowledges the possible threats to VoIP protocols and seeks to offer countermeasures to those threats were technically feasible.**

The following security requirements shall apply, as defined below for equipment employing VoIP.

All VoIP Systems, shall follow the DSN Switch Certification and Accreditation Processes as defined in Section 6, Procedures, of the Department of Defense Instruction (DoDI) 8100.XX, "Department of Defense (DoD) Voice Networks," dated xx/xx/03 (still pending signature), in completing the IA Certification requirement. A subdocument of the defined procedures in the DoDI 8 100.XX process is the Information Assurance Test Plan (IATP). The DISA DSN VoIP IATP, dated July 2003, is the guideline in providing security features test criteria for telecommunications switches connected or planned for connection to the DSN. The IATP will evaluate security features within the existing network and critical areas involving MUF and new telecommunications technology. The IATP will also address security features between new technologies; new technologies and the existing network; and the performance impact of these new technologies on MUF. The IA testing will be conducted and the system secured in accordance with the applicable Security Technical Implementation Guides (STIGs), prior to operation of telecommunications switches connected to the DSN.

Additionally, DSN switching platforms require accreditation prior to being authorized connectivity to the DSN in accordance with the Draft DoDI 8 100.XX and DoDI 5200.40 "Department of Defense Information Technology Security Certification and Accreditation Process (DITSCAP),", dated 30 December 1997. **VoIP systems shall be required to be certified and accredited in accordance with the DITSCAP process.**

VoIP implementations within DoD for the provision of voice services shall meet the same stringent security procedures as circuit switches. VoIP systems, either IP Enabled or IP Centric, shall adhere to the GR-8 15-CORE security measures already outlined in Section 13 (Security) of this GSCR to provide the features and functionality needed to implement the requirements of the DSN Security Technical Implementation Guide (STIG). Additionally, the VoIP system shall provide the features and functionality needed to implement the requirements of the VoIP STIG, Draft, 15 September 2003, as pertaining to the VoIP System and its subcomponents, excluding the LAN requirements. LAN security requirements are defined in Section A.3.3.4.3 of this Appendix.

Any VoIP subcomponents that utilize OS/data client/Internet/network technologies (e.g., Windows XP, Windows 2000, Windows NT, Unix; DBMS/SQL Databases, Oracle, and/or Web Service) for which DISA Field Security Office (FSO) STIGS are enforced, the VoIP subcomponents shall provide the features and functionality needed to implement the requirements of the appropriate DISA FSO STIG requirements. Where there is a direct conflict of requirements between the OS/data client/Internet/network technologies subcomponent STIGs and the VoIP STIG, the VoIP STIG requirements shall take precedence. Where no conflicts exist in requirements, the features and functionality needed to implement the requirements of all STIGs shall apply simultaneously. See Figure 3 for the hierarchical precedence of STIG requirements.

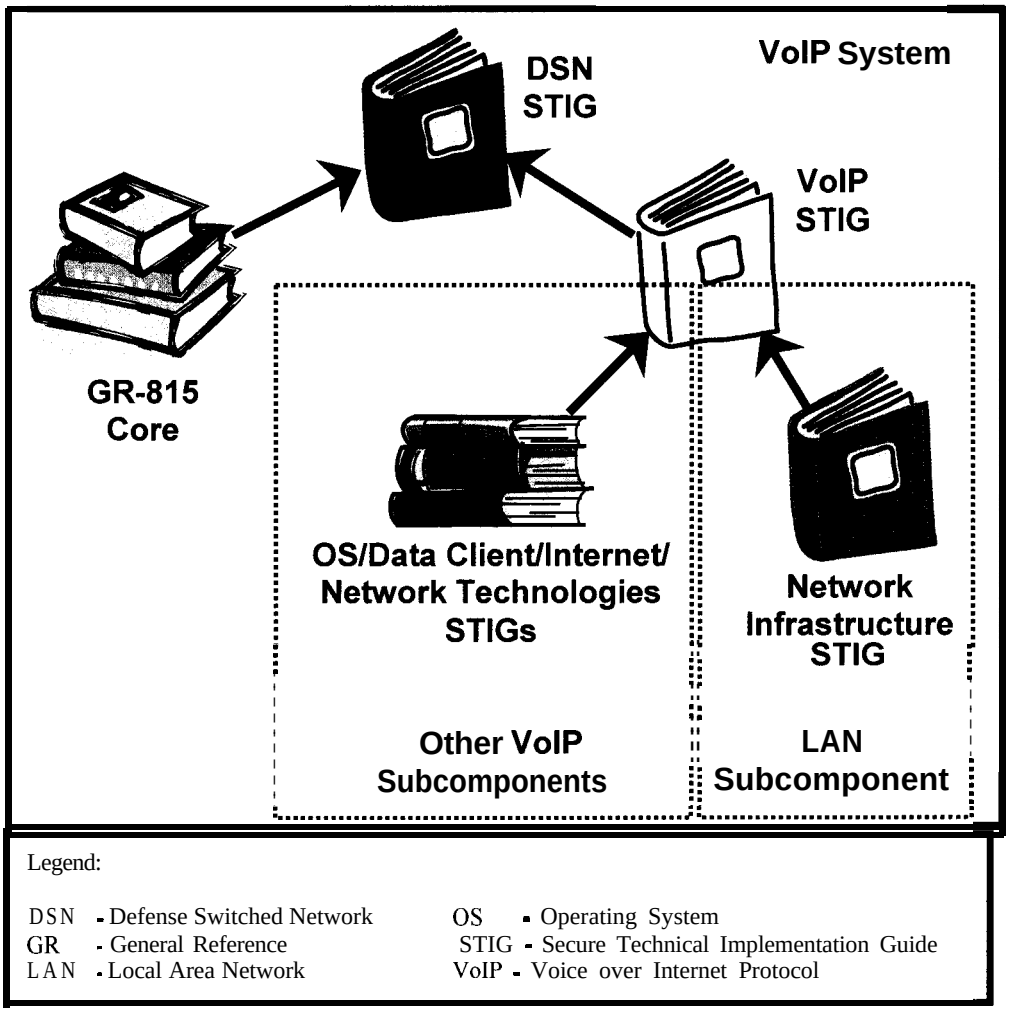

Figure 3. Hierarchical Precedence of STIG Requirements

A3.2.5 Network Management (NM)

[REQUIRED: TS, EOS, MFS, SMEO - CONDITIONAL: PBX1, PBX2] The VoIP system shall meet the NM functions described in Section 9 of this GSCR as applicable to switch type. LAN manageability functions specific to the LAN are described in section A3.3.4.2 of this appendix. NM requirements specific for the LAN may be provided via an additional interface above and beyond those NM interfaces required in Section 9.

A3.2.6 Timing

[REQUIRED: TS, EOS, SMEO, MFS, PBX1, PBX2] The VoIP system shall support line timing modes as defined in GSCR, Section 11.1.1.2, Line Timing Mode.

[REQUIRED: TS, EOS, MFS - CONDITIONAL: SMEO, PBX1, PBX2] The VoIP system shall provide internal clock requirements as described in the Telcordia, GR-5 1 S-CORE, Issue 1, May 1994, paragraph 18.2.

A3.2.7 Latency

[REQUIRED: TS, EOS, MFS, SMEO, PBX1, PBX2] The one-way system latency for the SUT/VoIP system shall be 60 msec or less as averaged over any live-minute period. The latency is to be measured from IP handset to egress from the SUT via a DSN trunk. An illustrative reference circuit diagram for this specification is shown in Figure 4.

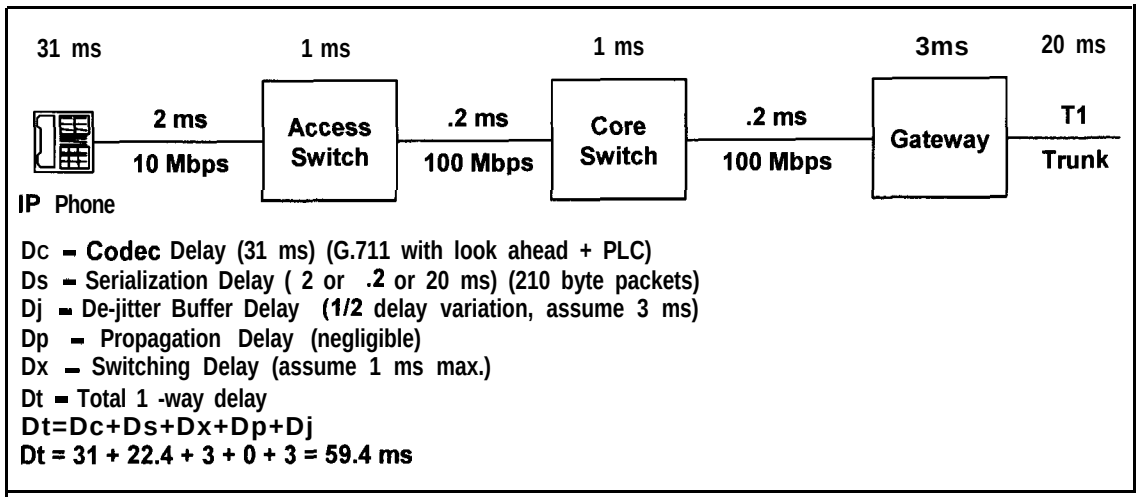

Figure 4. LAN Delay from Mouth to Trunk to DSN Switch

A3.2.8 IPv6 Capable

[REQUIRED: TS, EOS, MFS, SMEO, PBX1, PBX2] All IP devices in the VoIP system shall be IPv6 capable (in addition to maintaining interoperability with IPv4 systems) in accordance with the JTA.

A3.3 Local Area Network (LAN) Requirements

There are several capabilities and characteristics that need to be addressed when implementing VoIP. The following are those capabilities and characteristics that are significant for DSN VoIP implementations:

a. LAN Parameters

1) Delay (Latency)

2) Jitter

3) Packet loss

b. Class of Service (CoS)

1) CoS models

2) Traffic Prioritization

c. Quality of Service (QoS)

1) Queuing

2) Policing

3) Virtual LANs (VLANs)

d. LAN Design

1) Reliability

2) Management

3) Security

4) Traffic Engineering

5) Architectures

A3.3.1 LAN Parameters

A3.3.1.1 Delay

[REQUIRED: C2VGLAN, VGLAN] Packet delay (latency) is the length of time it takes a packet to traverse the LAN. Each element of the network adds to packet delay, including Ethernet switches, routers, distance traveled through the network, firewalls, and jitter buffers. **The one-way packet delay for packets of an established call (signaling and media) within the LAN for a DSN VoIP system shall be 5 milliseconds (msec) or less as averaged over any five minute period.**

A3.3.1.2 Jitter

[REQUIRED: C2VGLAN, VGLAN] Jitter is defined as the statistical average variance in delivery time between packets or datagrams. Jitter is introduced by the variable transmission delay over the network. Removing jitter requires collecting packets and holding them long enough to allow the slowest packets to arrive in time to be played in the correct sequence, which causes additional delay. **For voice media packets jitter shall be 5 msec or less as averaged over any five minute period.** (Jitter is not a problem for signaling packets, since they do not occur in streams.)

A3.3.1.3 Packet Loss

[REQUIRED: C2VGLAN, VGLAN] Network packet loss occurs when packets are sent, but not received at the final destination. **LANs shall he engineered for a theoretical packet loss of zero for voice packets; actual or measured voice packet loss within the LAN shall not exceed 0.05% averaged over any five minute period.**

A3.3.2 Class of Service (CoS)

CoS is a mission-sensitive indication of relative 'priority' of an individual application session (e.g., phone call). CoS is determined by end user at time of session origination and is determined solely by mission content. CoS methods used within the DSN can be constrained by "class-mark" privileges and authentication. CoS is a classification method only; it does not ensure a level of Quality of Service (QoS), but is the method used by queuing mechanisms to limit delay and other factors to improve QoS.

Common CoS models include the IP TOS (Type Of Service) byte, Differentiated Services Code Point (DiffServ or DSCP, defined in RFC 2474 and others) and the Institute of Electrical and Electronic Engineers (IEEE) Inc 802.1p/Q. CoS, or tagging, is ineffective in the absence of QoS because it can only mark data. QoS relies on tags or filters to give priority to data streams.

A3.3.2.1 CoS Models

[REQUIRED: C2VGLAN (converged), VGLAN (converged) - CONDITIONAL: C2VGLAN (non-converged), VGLAN (non-converged)] For converged LANs, the traffic on the LAN is comprised of voice media streams, voice signaling, Operations, Administration & Maintenance (OA&M) packets, video and data packets. Converged LANs, shall support CoS.

For converged LANs, the routers and Ethernet switches shall support 802.1p to DSCP mapping and at least one of the following standards:

a. **Institute of Electrical and Electronic Engineers (IEEE) Inc. 802.1p/Q**. 802.1p is a specification for giving Layer 2 switches the ability to prioritize traffic (and perform dynamic multicast filtering). The prioritization specification works at the media access control (MAC) framing layer of the OSI model. 802.1p uses 802.1Q "tagged" bytes to distinguish classes of service. The 802.1Q specification also establishes a standard method for inserting virtual LAN (VLAN) membership information into Ethernet frames.

b. **DSCP.** DSCP is a part of the DiffServ framework specified by the Internet Engineering Task Force (IETF) in RFC 2474. DSCP is a six-bit field in an IP packet header from which as many as 64 classes of service can be created.

c. **IP TOS.** The TOS byte is in an IP header to prioritize traffic. TOS is an eight bit field comprised of which the first three bits is an IP Precedence portion that enables the creation of eight service classes, compared with the 64 classes possible in the DiffServ model.

A3.3.2.2 C2VGLAN Traffic Prioritization

[REQUIRED: C2VGLAN (converged), VGLAN (converged). CONDITIONAL: C2VGLAN (non-converged), VGLAN (non-converged)] Within the converged LAN different types of traffic are expected. The following is a listing of traffic streams prioritized from highest to lowest. Priorities shall be applied IAW the CoS models listed above.

a. Voice and Video Signaling and LAN Network Management (highest)

b. Voice and Video Media Stream

c. Data Traffic (lowest)

A3.3.3 Quality of Service (QoS)

QoS is defined as being the collection of technologies that allow applications/users to request and receive predictable service levels in terms of data throughput capacity (bandwidth), latency variations (jitter) and delay (i.e., it refers to the capability of a network to provide better service to selected network traffic). QoS involves giving preferential treatment through queuing, bandwidth reservation, or other methods based on attributes of the packet, such as CoS priority. A service quality is then negotiated. The following paragraphs (A3.3.3.1 through A3.3.3.3) outline the QoS requirements for the LAN in support of VoIP systems.

A3.3.3.1 Queuing

[REQUIRED: C2VGLAN (converged), VGLAN (converged) - CONDITIONAL: C2VGLAN (non-converged), VGLAN (non-converged)] For converged LANs, the routers shall support at least one of the following queuing mechanisms:

a. **Priority Queuing (PQ).** PQ supports some number of queues, usually from high to low. Queues are serviced in strict order of queue priority, so the high queue always is serviced first, then the next lower priority and so on. If a lower priority queue is being serviced and a packet enters a higher priority queue, that higher priority queue is serviced immediately after the current packet from the lower queue is sent. (Strict Priority Queuing cannot be used.)

b. **Custom Queuing (CQ). CQ** allows a network administrator to reserve a percentage of bandwidth for specified protocols. Custom queuing has a large number of queues and transmits a configurable amount of data from a queue before proceeding to the next. This queuing strategy makes it possible to guarantee a minimum amount of bandwidth for certain traffic types, while at the same time making the bandwidth that is left unused available to other traffic types.

c. Weighted Fair Queuing (WFQ). WFQ is a packet scheduling technique allowing guaranteed bandwidth services. The purpose of WFQ is to let several sessions share the same link by assigning weights' to each of the queues.

d. **Class-Based Weighted Fair Queuing (CBWFQ).** CBWFQ allows traffic to be weighted based on criteria, such as access control lists, input interface names, protocols, and QoS labels.

A3.3.3.2 Policing

[REQUIRED: C2VGLAN (converged), VGLAN (converged) - CONDITIONAL: C2VGLAN (non-converged), VGLAN (non-converged)] Traffic Policing limits the input or output transmission rate of a class of traffic based on user-defined criteria and marks packets by setting the IP Precedence value, the QoS group, or the DSCP value. **For converged LANs, the routers shall support at least one of the following policing mechanisms:**

a. **DiffServ Per-Hop Behavior (PHB):** a description of the externally observable forwarding treatment applied at a differentiated services-compliant node to a behavior aggregate based on the DSCP and as explained in RFCs 2474, 2475, and 3260.

If DiffServ is used, routers shall support the following:

1) **Expedited Forwarding (EF).** The EF PHB is defined in RFC 3246 as a forwarding treatment for a particular diffserv aggregate where the departure rate of the aggregate's packets from any diffserv node must equal or exceed a configurable rate. The EF traffic should receive this rate independent of the intensity of any other traffic attempting to transit the node. If the EF PHB is implemented by a mechanism that allows unlimited preemption of other traffic (e.g., a priority queue), the implementation shall include some means to limit the damage EF traffic could inflict on other traffic (e.g., a token bucket rate limiter). Traffic that exceeds this limit shall be discarded.

2) Assured Forwarding (AF). The AF PHB group, as defined in RFC 2597, provides delivery of IP packets in four independently forwarded AF classes. Within each AF class, an IP packet can be assigned one of three different levels of drop precedence. In case of congestion, the drop precedence of a packet determines the relative importance of the packet within the AF class. A congested DS node tries to protect packets with a lower drop precedence value from being lost by preferably discarding packets with a higher drop precedence value. A DS node must allocate forwarding resources (buffer space and bandwidth) to AF classes so that, under reasonable operating conditions and traffic loads, packets of an AF class x do not have higher probability of timely forwarding than packets of an AF class y if $x < y$.

3) Default Best Effort (BE). This is the common, best-effort forwarding behavior available in existing routers. When no other agreements are in place, it is assumed that packets belong to this aggregate. Such packets may be sent into a network without adhering to any particular rules and the network will deliver as many of these packets as possible and as soon as possible, subject to other resource policy constraints. **This forwarding behavior shall not be used for VoIP.**b.

Generic Traffic Shaping (GTS). GTS shapes traffic by reducing outbound traffic flow to avoid congestion by constraining traffic to a particular bit rate using the token bucket mechanism. GTS applies on a per-interface basis and can use access lists to select the traffic to shape. Traffic adhering to a particular profile can be shaped to meet downstream requirements, eliminating bottlenecks in topologies with data rate mismatches.

c. Class-Based Shaping (CBS). CBS is a modification to GTS in that CBS shapes on a traffic class basis, specifies average rate or peak rate traffic shaping, and uses CBWFQ.

A3.3.3.3 Virtual LANs (VLANs)

[REQUIRED: C2VGLAN (converged), VGLAN (converged) - CONDITIONAL: C2VGLAN (non-converged), VGLAN (non-converged)] There are three key standards for layer 2 switching and VLAN processing. These standards are governed by the IEEE and are 802.1D, 802.1p, and 802.1Q:

a. The 802.1 D standard defines the notion of a bridge and how the spanning tree protocol works to define bridges and bridge membership.

b. 802. lp adds the notion of queue prioritization that defines up to eight prioritized traffic classes. This enables traffic to be tagged for faster or prioritized delivery.

c. Finally, 802.1 Q defines the VLAN tag and associated processing. This specification also functionally specifies VLAN Registration among VLAN-aware Ethernet switches (Generic VLAN Registration Protocol, or GVRP). 802.1 Q also talks about multicast registration (GMRP).

In general, there are three basic methods for determining and controlling how a packet gets assigned to a VLAN.

a. Port-based VLANs. Port-based VLANs are the simplest form of virtual LAN, but provide the largest degree of control and security. In this method, the administrator assigns each port of an Ethernet switch to a VLAN. For example, ports 1-3 might be assigned to VLAN 1, ports 4-6 to VLAN 2 and ports 7-9 to VLAN 3. The Ethernet switch determines the VLAN membership of each packet by noting the port on which it arrives; port assignments are static and can only be changed by the network administrator.

b. MAC address-based VLANs. The VLAN membership of a packet in this case is determined by its source or destination MAC address. Each Ethernet switch maintains a table of MAC addresses and their corresponding VLAN memberships. In order for a machine to gain access to the VLAN, it must have a MAC address that is recognized by the Ethernet switch.

c. Layer 3 (or protocol)-based VLANs. With this method, the VLAN membership of a packet is based on protocols and Layer 3 addresses.

Another important distinction between VLAN implementations is the method used to indicate membership when a packet travels between Ethernet switches. Two methods exist - implicit and explicit.

a. Implicit - VLAN membership is indicated by the MAC address, In this case, all Ethernet switches that support a particular VLAN shall share a table of member MAC addresses.

b. Explicit - A tag is added to the packet to indicate VLAN membership. The IEEE 802.1 Q VLAN specification uses this method.

To summarize, when a packet enters its local Ethernet switch, the determination of its VLAN membership can be port-based, MAC-based or protocol-based. When the packet travels to other Ethernet switches, the determination of VLAN membership for that packet can be either implicit (using the MAC address) or explicit (using a tag that was added by the first Ethernet switch). Port-based and protocol-based VLANs use explicit tagging as their preferred indication method. MAC-based VLANs are almost always implicit.

For converged LANs, Ethernet switches shall support either Implicit or Explicit VLAN membership for:

a. Port-based VLANs

b. MAC address-based VLANs

c. Layer 3 (or protocol)-based VLANs

This requirement does not preclude softphones that may share the same virtual connection from the personal computer to the access switch where the traffic will be separated into the appropriate VLAN.

Network Management and Voice traffic (signaling & media) shall be placed in a separate VLAN from data and video traffic. CoS and QoS measures shall be applied to the network management and the voice VLAN to guarantee bandwidth.

A3.3.4 LAN Design

[REQUIRED: C2VGLAN, VGLAN] LANs can be designed to be "shared" or "switched". Typically, shared topologies share bandwidth (10 Mbps or 100 Mbps) amongst a fixed number of users while switched LAN topologies dedicate bandwidth (10 Mbps or 100 Mbps) to each subscriber. Switched LANs can be half duplex (one-way communications) or full duplex (two-way simultaneous communications). **For VoIP solutions, C2VGLAN networks shall be designed to support a full duplex switched topology.**

All C2VGLAN networks shall be designed not to exceed the IEEE recommended distances for Ethernet cabling provided in Table 1 below. Ethernet switching platforms used in the

LAN shall conform to the IEEE standards listed in Table 2. For VoIP implementations, the following paragraphs detail the network design requirements that shall be met.

Table 1. IEEE 802.3 Distance Limitations

	10Base-T Ethernet	100Base-T Fast Ethernet	1000Base-T Gigabit Ethernet
Cat 5 & 6 UTP, Cat 5e	330 ft 100 m	330 ft 100 m	330 ft 100 m
Multi-mode Fiber	6600 ft 2km	6600 ft 2km	1830 ft 550 m
Single-mode Fiber	15mi 25 km	12mi 20 km	3 mi 5km
Note: All distances are for full duplex communications.			
Legend: Cat - Category ft - Feet km - Kilometers		m - Meters mi - Miles UTP - Unshielded Twisted Pair	

Table 2. IEEE Conformance for LAN Switches used in Converged Networks

Switching Platforms IEEE Conformance	
Standard	**Description**
802.1d	Bridging
802.1p/Q	VLAN tagging
802.1s	Per-VLAN Group Spanning Tree Protocol
802. 1v	VLAN Classification by Protocol and Port
802.1w	Rapid Reconfiguration of Spanning Tree
802.1x	Port Based Network Access Control
802.3ad	Link Aggregation Protocol
Legend: IEEE - Institute of Electrical and Electronic Engineers Inc LAN - Local Area Network	VLAN - Virtual LAN

A3.3.4.1 Reliability

[REQUIRED: C2VGLAN - CONDITIONAL: VGLAN] The following paragraphs outline the reliability requirements for the C2VGLAN. **The C2VGLAN shall have a hardware availability of .99999 (non-availability of no more than 5 minutes per year (mins/yr)). The vendor shall provide a reliability model for the system showing all calculations and showing how the overall availability will be met. The C2VGLAN shall have no single point of failure that can cause an outage of more than 64 telephony subscribers. In order to meet**

the availability requirements, all switching/routing platforms that offer service to more than 64 telephony subscribers shall have a modular chassis that provides at a minimum:

a. **Dual power supplies.** The platform shall provide a minimum of two power supplies each with the power capacity to support the entire chassis. Loss of a single power supply shall not cause any loss of ongoing functions within the chassis.

b. **Dual processors (control supervisors).** The chassis shall support dual active processors. Failure of any one processor shall not cause loss of any ongoing functions within the chassis (e.g. no loss of active calls).

c. Termination Sparing. The chassis shall support a (N + 1) sparing capability for available 10/100 Base-T modules used to terminate to an IP subscriber.

d. **Redundancy protocol.** Routing equipment shall support a protocol that allows for dynamic rerouting of IP packets so that no single point of failure exists in the C2VGLAN.

e. No Single Failure Point. No single point shall exist in the LAN that would cause loss of voice service to more than 64 IP telephony instruments.

f. **Switch Fabric or Backplane Redundancy.** Switching platforms within the C2VGLAN shall support a redundant (1 + 1) switching fabric or backplane. The second fabric's backplane shall be in active standby such that failure of the first shall not cause loss of ongoing events within the switch.

The components that comprise the C2VGLAN systems for C2 users shall meet the appropriate GSCR switch type backup power requirements (e.g., 8 hours for MFS/SMEO/EO) for all devices including the phones. For a PBX1, the backup power requirement is 2 hours.

In the event of a component failure in the network, all calls that are active shall not be disrupted (loss of existing connection requiring redialing) and the path through the network shall be restored within 2 seconds. All devices used to build redundancy shall be capable of handling the entire call processing load in the event that its counterpart device fails.

A3.3.4.1.1 Maximum Downtime

[REQUIRED: TS, EOS, MFS, SMEO - CONDITIONAL: PBX1, PBX2] Individual IP telephone terminations shall meet the following maximum downtime requirements:

a. IP (10/100 Ethernet) network links - 35 mins/yr

b. IP subscriber - 12 mins/yr

[REQUIRED: PBX1 – CONDTIONAL: PBX2] PBXs shall meet the following maximum downtime requirements:

a. IP (10/100 Ethernet) network links - 80 mins/yr

b. IP subscriber - 120 mins/yr

A3.3.4.2 Management

A3.3.4.2.1 Interface

[REQUIRED: C2VGLAN - CONDITIONAL: VGLAN] For management of the LAN, there are two methods to physically interface to the LAN devices; in-band and out-of-band. The in-band method includes one approach, which is via an Ethernet port. The out-of-band method includes three different approaches, which are via an Ethernet port, local port, or an internal modem. **Each device in a LAN shall support at least one of the following methods:**

a. **In-band.** Network management system connects to the network device using the same communication channels used for user traffic.

1) **Ethernet Port. Network management system connects to the network device using the same Ethernet network as the user traffic.**

b. **Out-of-band.** Network management system connects to the network device using a physically separated network from the network used for user traffic. This requires an additional network infrastructure to support management traffic.

1) **Ethernet Port. Network management system connects to the network device using a different Ethernet network than used for user traffic.**

2) Local port. Network management system connects to the network device via a local port (i.e., RS-232 port) on the device using a computer, terminal or modem.

3) Modem. Network managers connect to the network device remotely using an integrated modem interface on the device. Communications are usually over the Public Switched Telephone Network (PSTN) and operators may dial in from remote locations.

[REQUIRED: C2VGLAN - CONDITIONAL: VGLAN] Simple Network Management Protocol (SNMP) shall be used as a minimum for interfacing between the LAN devices and the network management system. SNMP guidance is contained in the SNMPv3 Compliance Requirements for DISA, 1 July 2003, which require that SNMPv1, SNMPv2c, and SNMPv3 are supported and that at least the User-based Security Model (Request for Comment (RFC) 3414) and the Community-based Security Model (RFC 2576) are implemented. The document also contains a list of the SNMP RFCs that are required by network management systems. It is an

objective requirement that only SNMPv3 is implemented. In addition, both RMON2 and MIB II shall be supported for SNMP implementations.

In addition, if other methods are used for interfacing between LAN devices and the network management system they shall be implemented in a secure manner such as with the following methods:

a. **Secure Shell 2 (SSH2). The SSH2 protocol shall be used instead of Telnet due to its increased security as described in Internet Draft "draft-ietf-secsh-transport-17.txt – SSH Transport Layer Protocol."**

b. **HyperText Transfer Protocol, Secure (HTTPS). HTTPS shall be used instead of HTTP due to its increased security as described in RFC 2660 "Secure HyperText Transfer Protocol."**

A3.3.4.2.2 Measurements

[REQUIRED: C2VGLAN - CONDITIONAL: VGLAN] LAN devices shall be capable of measuring and reporting the following measurements:

a. **Performance. The VoIP Network Management System shall collect statistics and monitor bandwidth utilization, delay, jitter, and packet loss.**

b. **Fault. The VoIP LAN transport elements (e.g., routers, Ethernet switches, etc.) shall provide** status changes to the network management system by an automated capability in near real time (less than one minute) 99.95% (Objective) and 99.5% (Threshold) of the time. **The automated status change requirements are satisfied by sending SNMP or ASCII messages from the VoIP LAN components to the VoIP network management system.**

c. Configuration. The VoIP network management system shall have the ability to perform remote configuration/reconfiguration of objects that have existing DoD Joint Technical Architecture (JTA) management capabilities or permit configuration/ reconfiguration via one of the protocols specified in section A3.3.4.2.1.

d. **For security and control purposes, VoIP LAN devices shall only be activated by a central control entity (e.g., help desk or service office). "Plug and Play" shall not be enabled. All DOD security policies and guidelines for IP networks shall be adhered to when designing the NM capabilities of the LAN.**

A3.3.4.3 Security

[REQUIRED: C2VGLAN, VGLAN] The IP equipment that comprises the C2VGLAN and/or the VGLAN shall provide the features and functionality needed to implement the requirements of the Network Infrastructure and the VoIP STIG. Where there is a direct conflict of

requirements (e.g., stateful packet inspection firewall requirement versus application firewall requirement) between the two STIGs, the VoIP STIG requirements shall take precedence. Where no conflicts exist in requirements, the features and functionality needed to implement the requirements of both STIGs apply simultaneously.

A3.3.4.4 Traffic Engineering (TE)

A3.3.4.4.1 Bandwidth

[REQUIRED: C2VGLAN, VGLAN] Bandwidth required per subscriber is 178.4 kbps (89.2 kbps each direction) for each IP call. This is based on G.711with IP overhead (87.2 kbps) with VoIP signaling (2 kbps) included. Bandwidth available for Ethernet full duplex LANs is 20 Mbps (10 Mbps upstream and 10 Mbps downstream) and 200 Mbps (100 Mbps upstream and 100 Mbps downstream) for 1 0Base-T and 1 00Base-T, respectively. (For the purposes of this document, bandwidth is defined in the sense used in TDM telephony systems, i.e., the bandwidth of a T1 trunk is 1.544 Mbps for each direction, for a total full duplex bandwidth of 3.088 Mbps.) In order to provide non-blocking bandwidth for trunk traffic, 4.185 Megabits per second (Mbps) shall be reserved in the LAN for each T1 trunk between the Gateway and DSN. This bandwidth requirement is based on 24 simultaneous two-way non-compressed G.711 conversations (24x 174.4 kbps). Bandwidth shall be guaranteed through the use of CoS/QoS as described in this appendix. (Based on overhead bits included in the bps calculations, vendor implementations may use different bps calculations and hence arrive at slightly different bps numbers. This is acceptable to the government, but does not negate the number of IP telephone subscribers that are allowed per 10, 100, 1000 Mbps link as specified in Sections A3.3.4.4.2 through A3.3.4.5.1.1).

A3.3.4.4.2 TE Calculations

[REQUIRED: C2VGLAN, VGLAN] LAN architectures proposed for VoIP systems shall be designed based on the following traffic engineering parameters:

a. Bandwidth for 64 subscribers is 5.71 Mbps (11.42 Mbps for two-way conversation); 64 subscribers can be serviced via a 10 Mbps full duplex link.

b. The physical interface between the LAN and Local Call controller/Gateway shall be a minimum of 100 Mbps Ethernet (full duplex).

c. Maximum number of IP telephony subscribers per 100 Mbps full duplex link to the IP Gateway or TDM switch is 1024. For interface cards in the circuit switch or in the VoIP call control device that cannot support 1024 simultaneous IP subscribers, the number of subscribers is limited to the maximum number of simultaneous calls the interface card can support.

d. Access links (between IP phone/Ethernet switch) shall be switched 10 Mbps or 100 Mbps Ethernet.

A3.3.4.4.3 Non-Converged LAN TE

[REQUIRED: C2VGLAN - CONDITIONAL: VGLAN] For non-converged LANs, each switching/routing component's network links shall he engineered as follows:

a. **10 Mbps single link.** Up to 64 IP telephony subscribers may be supported per 10 Mbps single link for the C2VGLAN. The VGLAN may support up to 100 IP telephony subscribers per 10 Mbps link because it does not have to support single point of failure requirements of section A3.3.4.1 above (i.e., 64 IP subscribers).

b. **10 Mbps link pair.** Up to 100 IP telephony subscribers may be supported per 10 Mbps link for the C2VGLAN if reliability requirements are met. A 10 Mbps link pair is not required for the VGLAN.

c. 100 Mbps/l Gbps single link. Up to 64 IP telephony subscribers may be supported per link for the C2VGLAN. For the VGLAN, up to 1024 IP telephony subscribers can be supported per link.

d. **100 Mbps/l Gbps Link pair.** Up to 1024 IP telephony subscribers can be supported per link pair on one device if reliability requirements are met.

A3.3.4.4.4 Converged LAN TE

[REQUIRED: C2VGLAN - CONDITIONAL: VGLAN] For converged LANs, switching/routing component's network links shall be engineered as follows:

a. **100 Mbps/l Gbps single link** Up to 64 IP telephony subscribers may be supported per link for the C2VGLAN. For the VGLAN, up to 1024 IP telephony subscribers can be supported per link.

b. **100 Mbps link pair.** Up to 256 IP telephony subscribers may be supported per link pair for the C2VGLAN. Up to 1024 IP telephony subscribers may be support per link pair for the VGLAN.

c. 1 Gbps link pair. Up to 1024 IP telephony subscribers may be supported per link pair for the C2VGLAN and VGLAN.

A3.3.4.5 LAN Architectures

A3.3.4.5.1 C2VGLAN

C2VGLANs will be designed to ensure that traffic engineering and redundancy requirements specified in the GSCR are met. C2 LANs may be designed to use any combination of the following layers:

a. Access or edge layer. The access or edge layer is the point at which local end users are allowed into the network. This layer may also use access lists or filters to further optimize the needs of a particular set of users.

b. Distribution or building layer. The distribution or building layer of the network is the demarcation point between the access and core layers and helps to define and differentiate the core. The purpose of this layer is to provide boundary definition and is the place at which packet manipulation can take place.

c. Core layer. The core layer is a high-speed switching backbone and is designed to switch packets as fast as possible.

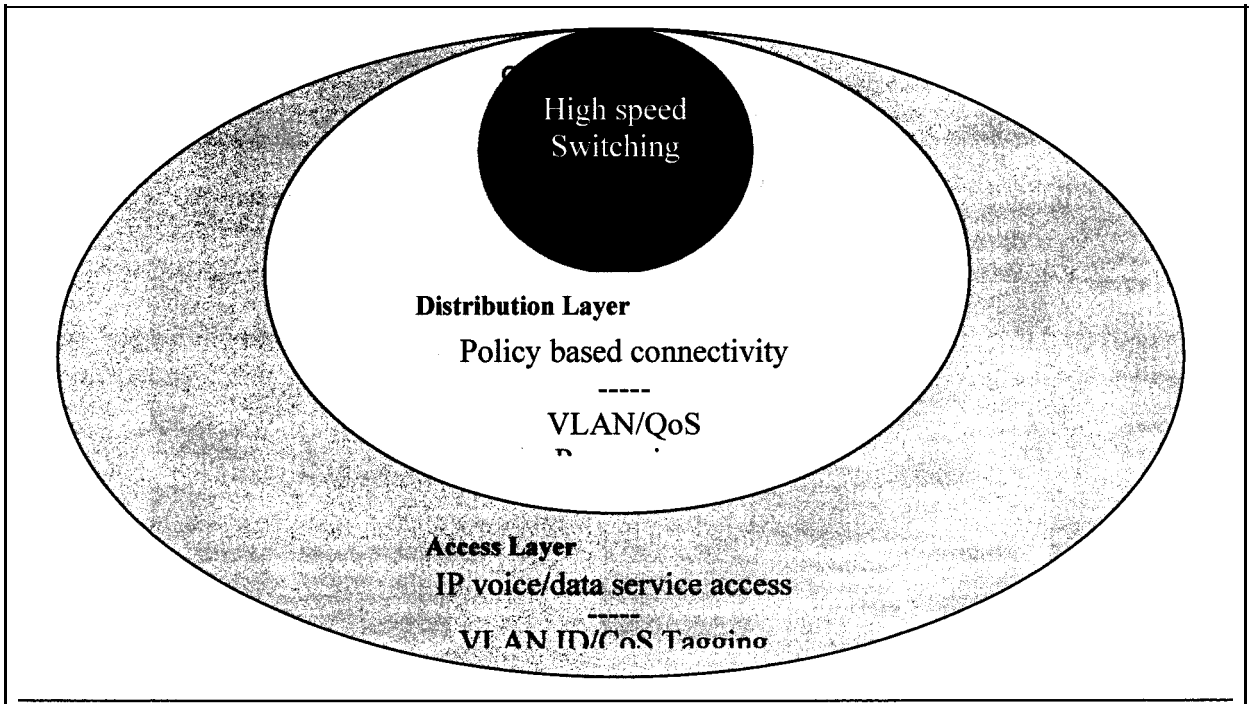

Figure 5. LAN Layers

A3.3.4.5.1.1 Access Layer

For the C2VGLAN, access from the IP subscriber shall be provided by Ethernet switches. There are two methods that an IP subscriber can access voice services: dedicated Ethernet port or shared Ethernet port. Dedicated access method provides separate access ports for Voice and other traffic type. Shared access method allows a single access port to provide for all traffic types. **C2VGLANs may use either method (see figure 6) but shall use VLANs to separate voice from other traffic.** Access switches used in the C2VGLAN may range in size from less than 64 voice IP subscriber ports to 1024 voice IP subscriber ports. For access devices that

provide IP voice services to more than 64 IP telephony users the switch shall meet the reliability requirements described in section A.3.3.4.1 of this appendix. For data PC ports, the number of ports for dedicated access is not specified.

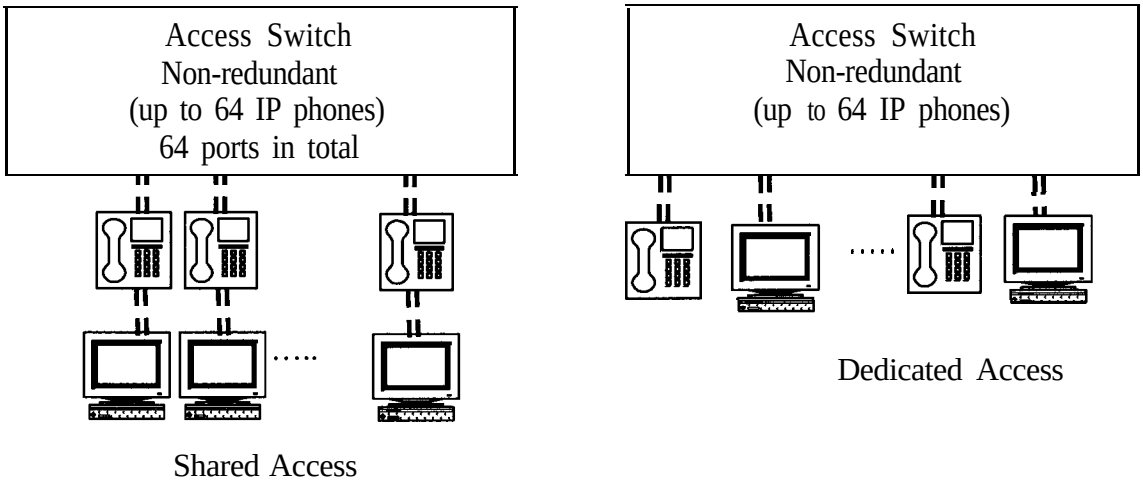

Figure 6. Access Methods for Converged C2VGLAN

A3.3.4.5.1.1 Distribution & Core Layers

If a distribution layer or core layer is implemented, networks links between an access device and the devices shall be:

a. Non-converged C2 VGLAN. Minimum one 100 Mbps link pair for every 1024 IP telephony subscribers.

b. Converged C2 VGLAN. Minimum one 100 Mbps link pair for every 256 IP telephony subscribers or minimum one 1 Gbps link pair for every 1024 subscribers (e.g., 512 IP telephones require at a minimum two 100 Mbps link pairs, 1024 IP phones require either four 100 Mbps link pairs or one 1 Gbps link pairs).

Figures 7, 8, and 9 depict the pictorial architectures that could be implemented for the C2VGLAN.

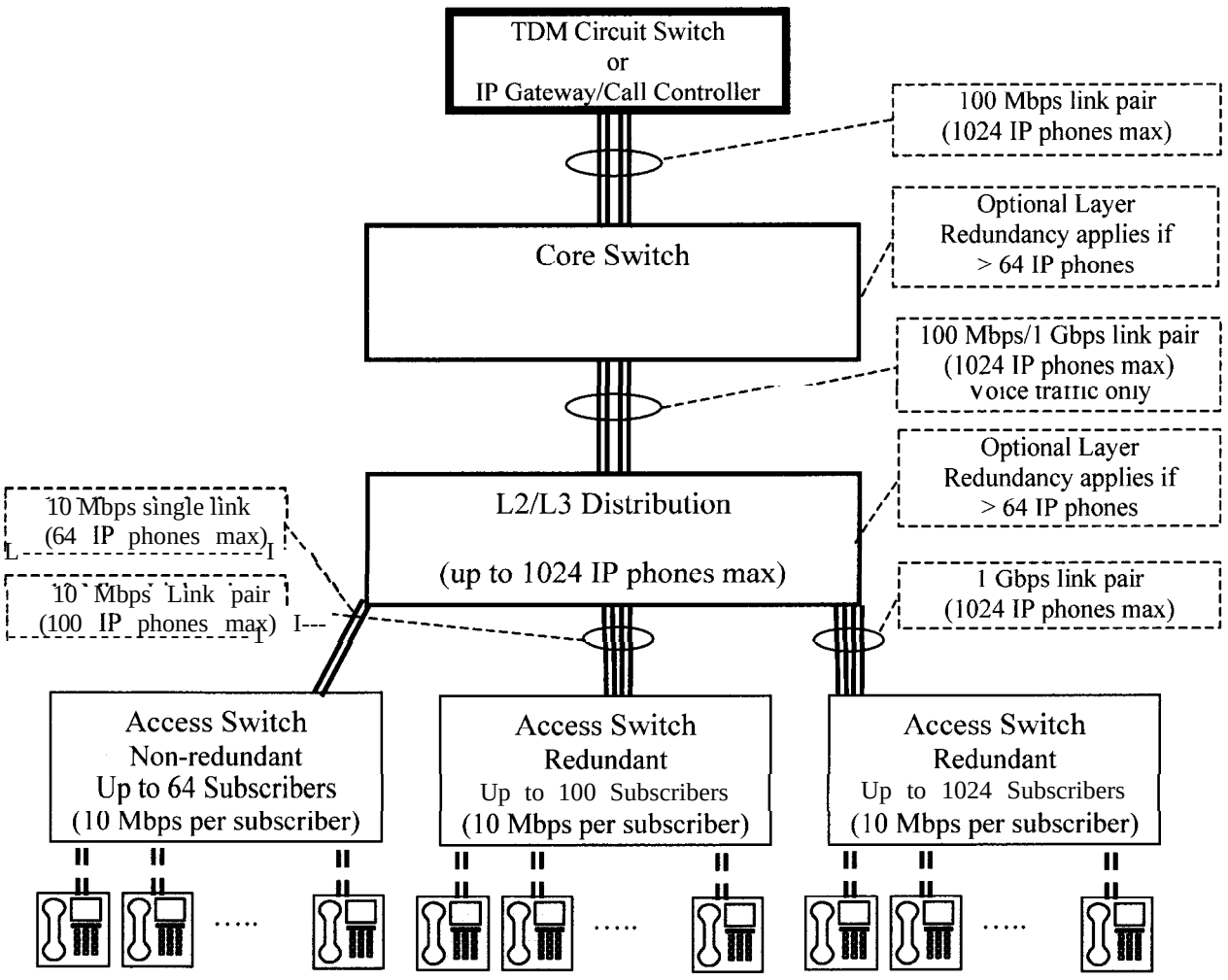

Notes:
1. All Links are full duplex.

C2	- Command & Control	LAN	- Local Area Network
IP	- Internet Protocol	Mbps	- Megabits per second
L2	- Open Systems Interconnect Layer 2 (Switching)	TDM	- Time Division Multiplexing
L3	- Open Systems Interconnect Layer 3 (Routing)		

Figure 7. C2VGLAN (non-converged) Architecture

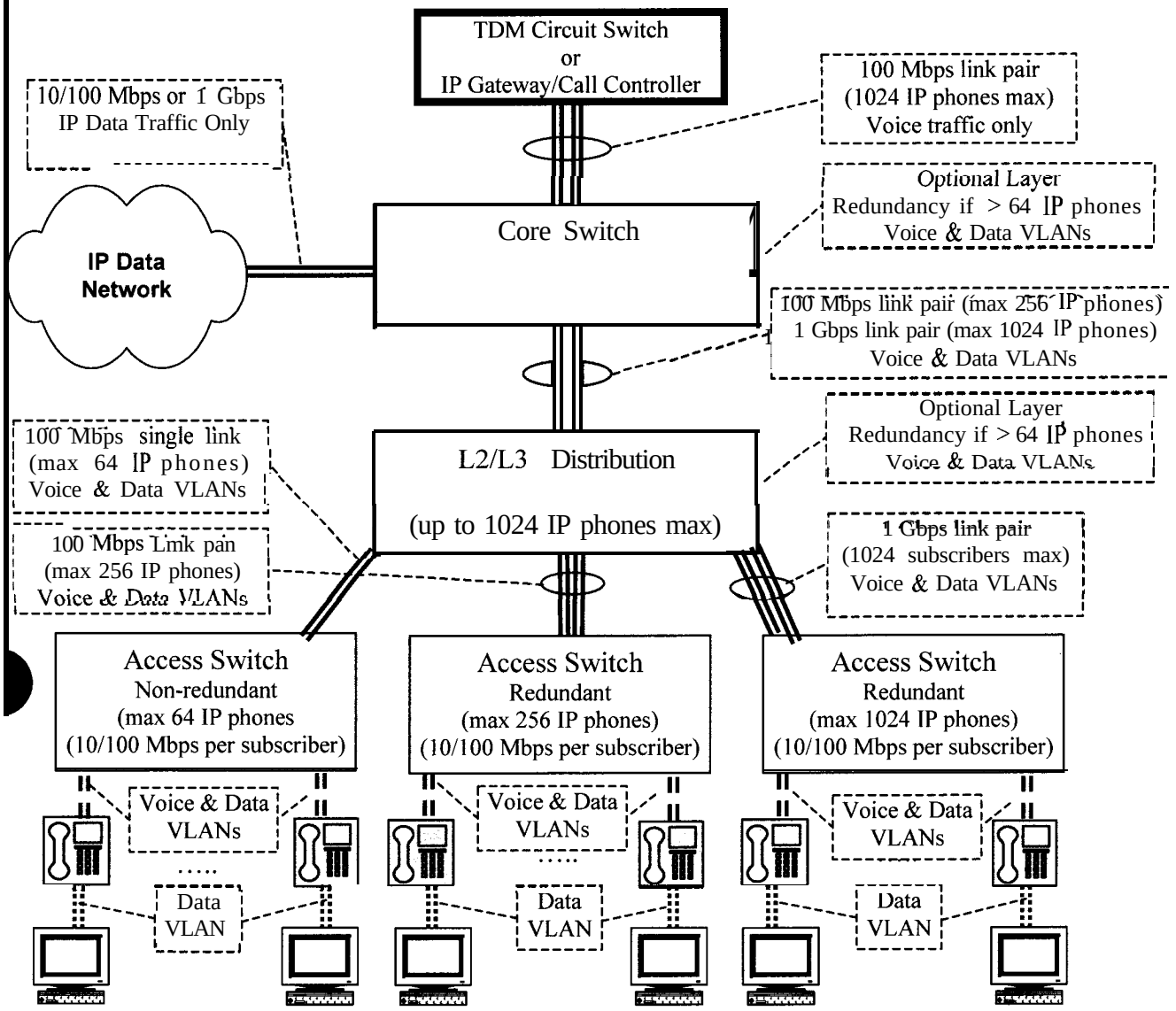

Notes:
1. All links are Full duplex.

C2	- Command & Control	LAN	- Local Area Network
IP	- Internet Protocol	Mbps	- Megabits per second
L2	- Open Systems Interconnect Layer 2 (Switching)	TDM	- Time Division Multiplexing
L3	- Open Systems Interconnect Layer 3 (Routing)	VLAN	- Virtual LAN

Figure 8. C2VGLAN (converged) Architecture with Shared Access

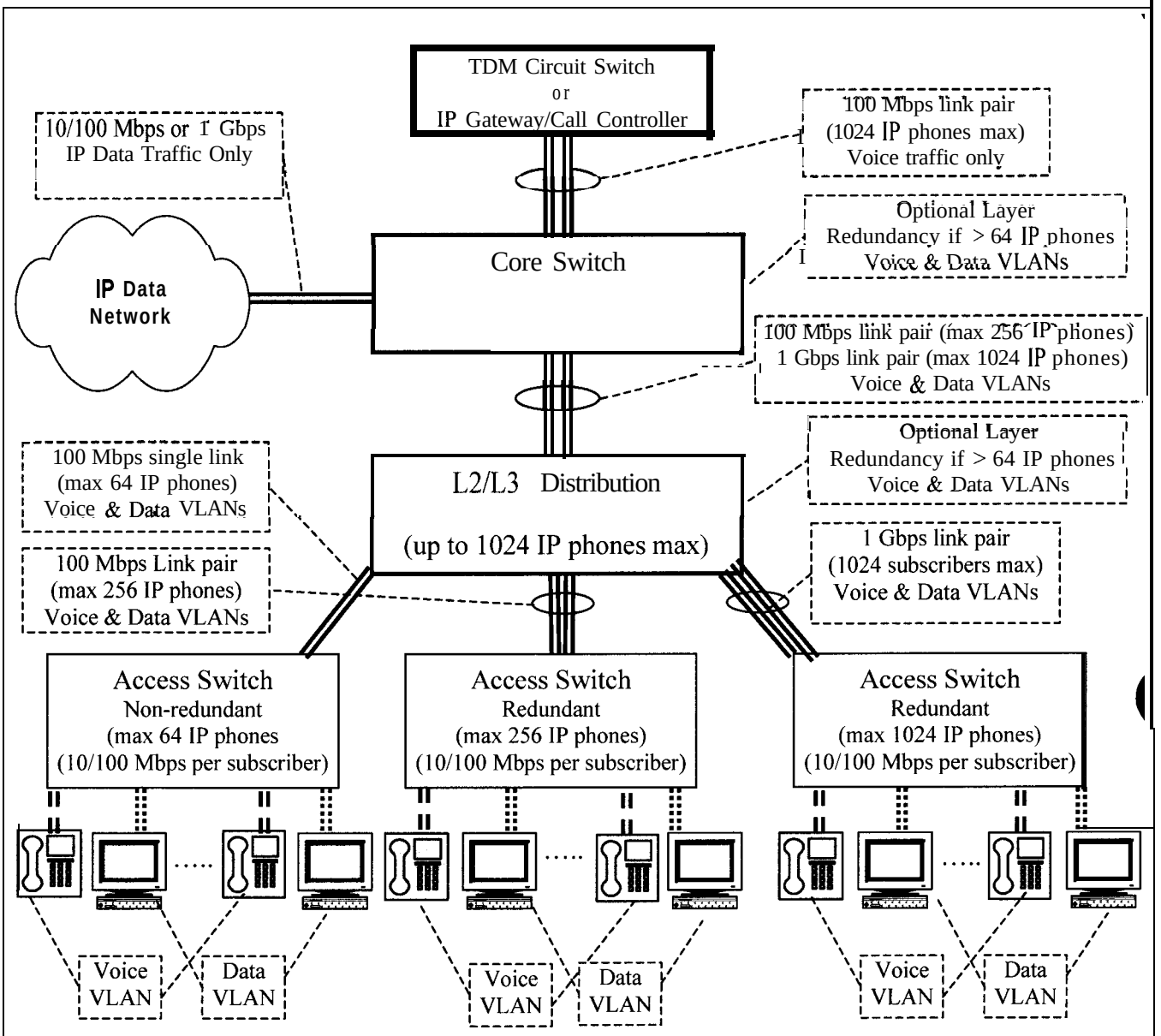

Notes:
1. All links are Full duplex.

C2	- Command & Control	LAN	- Local Area Network
IP	- Internet Protocol	Mbps	- Megabits per second
L2	- Open Systems Interconnect Layer 2 (Switching)	TDM	- Time Division Multiplexing
L3	- Open Systems Interconnect Layer 3 (Routing)	VLAN	- Virtual LAN

Figure 9. C2VGLAN (converged) Architecture with Dedicated Access

A3.3.4.5.2 VGLAN

[REQUIRED: PBX2] Though not required to provide C2 services, VGLANs are still required to provide voices services in accordance with CJCSI 6215.01B. VGLANs used to provide PBX2 voice services shall be designed in a manner consistent with PBX2 design practices. VGLANs will be designed in a manner similar to those presented for the C2 VGLAN with the exception that redundancy and single point of failure considerations need not be included.

A3.4 Requirements Summary

Table 3 provides a summary of the LAN requirements provided in the paragraphs above. Tables 4 and 5 provide the requirements for routers (Layer 3) or switches (Layer 2) used within the LAN.

Table 3. Overall LAN Requirements Summary

LAN Requirements (C2VGLAN & VGLAN)		
Description	**Requirement**	**Reference**
Voice Quality	MOS 4.0 or better	CJCSI 621501.B
Codec	G.711 (64 kbps)	GSCR
MLPP	MLPP interaction	GSCR
Delay	< 60 msec one-way for system < 5 msec one-way for the LAN	DISAHQ
Network Jitter	< 5 msec	DISAHQ
Network Packet Loss	< 0.05%	DISAHQ
Bandwidth (one way)	89.2 kbps(NOMINAL)	GSCWDISAHQ
Availability (SMEO-MFS)	99.999% C2VGLAN GSCR Reliability/Failure - 35 mins/yr - 12 mins/yr	GR-5 12-CORE/GR-474-CORE - IP network link downtime - IP Subscriber downtime
Availability (PBX 1)	99.999% C2VGLAN 99.997% PBX 1 availability - 80 mins/yr - 120 mins/yr	GSCR - IP network link downtime - IP Subscriber downtime
Battery backup/UPS	MFS, EO,& SMEO - 8 hrs PBX1 - 2 hrs if no alternate power source	GSCR

LAN Requirements (C2VGLAN & VGLAN)		
Description	**Requirement**	**Reference**

Legend:

c2 - Command and Control
Cat - Category
DVGR - DOD Voice Gateway Requirements
EO - End Office
GSCR - Generic Switching Center Requirements
Hrs - Hours
IEEE - Institute of Electrical and Electronic Engineers Inc.
Kbps - Kilobits per second
LAN - Local Area Network
MLPP - Multi-level Precedence and Preemption
MFS - Multifunction Switch
Msec - Millisecond
MOS - Mean Opinion Score
SMEO - Small End Office
UPS - Uninterruptible Power Supply

Table 4. LAN Platform Requirements

LAN Routing (C2VGLAN & VGLAN)	
Description	**Requirement**
Chassis	Modular (see Note 1)
Power Supplies	Minimum dual configuration (see Note 1)
Control Supervisor modules	Minimum dual configuration (see Note 1)
NM	Ethernet, serial port or integrated modem
COS (any one of)	IEEE 802.1 p/Q DSCP- RFC 2474 802.1p to DSCP mapping IP TOS - RFCs 1060/1349/1583/1700
QoS (any one of)	Queuing - CQ - WFQ - CBWFQ
	Policing - DiffServ PHB - GTS - CBS

Notes:
1. Required for C2VGLAN; conditional for VGLAN)

LAN Router (C2VGLAN & VGLAN)	
Description	**Requirement**
Legend:	
AF - Assured Forwarding	IP - Internet Protocol
BE - Best Effort	NM - Network Management
CBWFQ - Class-Based Weighted Fair Queuing	PHB - Per-Hop Behavior
CBS - Class-Based Shaping	PBR - Policy- Based Routing
cos - Class of Service	PQ - Priority Queuing
CQ - Custom Queuing	QoS - Quality of Service
DiffServ - Differentiated Services	RFC - Request for Comment
DSCP - DiffServ Code Point	RSVP - Resource Reservation Protocol
EF - Expedited Forwarding	TOS - Type of Service
GTS - Generic Traffic Shaping	WFQ - Weighted Fair Queuing
IEEE - Institute of Electrical and Electronic Engineers, Inc.	

Table 5. LAN Ethernet Switching Platform Requirements

LAN Ethernet (C2VGLAN & VGLAN)	
Description	**Requirement**
Chassis	Modular (see Notes 1)
Power Supplies	Minimum dual configuration (see Note 1)
Control Supervisor modules	Minimum dual configuration (see Note 1)
Switch Fabric	Redundant (1+1) (see Note 1)
(N + 1) 10/100 Mbps modules	IEEE 802.3 (see Note 1)
IEEE Conformance 802.1d	Bridging
802.1p/Q	VLAN tagging
802.1s	Per-VLAN Group Spanning Tree Protocol
802.1w	Rapid Spanning Tree Protocol
802.1x	Port Based Access Control
802.3ad	Link Aggregation Protocol
CoS	Any one of: - IEEE 802.1 p/Q - DSCP- RFC 2474 - IP TOS - RFCs 1060/1349/1583/1700
QoS	Queuing (any one of) - CQ - WFQ - CBWFQ
	Policing (any one of) - DiffServ PHB - GTS - CBS
	VLANs - Port-based VLANs - MAC address-based VLANs - Layer 3 (or protocol)-based VLANs - Implicit VLAN membership - Explicit VLAN membership
Notes: 1. Required for C2VGLAN devices with more than 64 IP telephony subscribers; conditional for VGLAN.	

LAN Ethernet (C2VGLAN & VGLAN)	
Description	**Requirement**
Legend:	
AF - Assured Forwarding	IP - Internet Protocol
BE - Best Effort	NM - Network Management
CBWFQ- Class-Based Weighted Fair Queuing	PHB - Per-Hop Behavior
CBS - Class-Based Shaping	PBR - Policy- Based Routing
cos - Class of Service	PQ - Priority Queuing
CQ - Custom Queuing	QoS - Quality of Service
DiffServ- Differentiated Services	RFC - Request for Comment
DSCP - DiffServ Code Point	RSVP - Resource Reservation Protocol
EF - Expedited Forwarding	TOS - Type of Service
GTS - Generic Traffic Shaping	WFQ - Weighted Fair Queuing
IEEE - Institute of Electrical and Electronic Engineers Inc.	

Enclosure A
DSN Switch Interface Requirements

Trunk Type	TS	MFS	EO	SMEO	PBX1
T1 SS7 (Tl 619a)	R	R	R		
El SS7 (ITU-T Q.955.3, Q.735.3 (R=EUROPE ONLY)	R	R	R		
Tl CAS MF R1	R	R	R		
T1 CAS DTMF	R	R	R	R	
T1 CAS DP	R	R	R	R	
El CAS MF R1 (R=EUROPE ONLY)	R	R	R	R	
El CAS DTMF (R=EUROPE ONLY)	R	R	R	R	
El CAS DP (R=EUROPE ONLY)	R	R	R	R	
Tl ISDN PRI (ANSI T1.619a)	R	R	R	R	R
ISDN PRI Subscriber NI-2	R	R	R	R	R
El ISDN PRI (ITU-T Q.955.3, Q.735.3) (R=EUROPE ONLY)	R	R	R		
Line Type	**TS**	**MFS**	**EO**	**SMEO**	**PBX1**
2-wire analog Lines		R	R	R	R
ISDN BRI Subscriber NI- 1		R	R	R	C*
ISDN BRI Subscriber NI-2		R	R	R	C*
ISDN-BRI ANSI T1-619a		R	R	R	R

Enclosure B
DSN Switch Type Interface/Feature Requirements

Multi-Function Switch				
Switch	**Trunk**	**Line**	**NM**	**Attendant**
	Interface			
	▪ T1 SS7 (T1.619a) - E1 SS7 (Q.955.3/Q.735.3) (Europe only) ▪ T1 CAS MF R1 - T1 CAS DTMF - T1 CAS DP ▪ El CAS MF R1 (Europe only) - E1 CAS DTMF (Europe only) - E1 CAS DP (Europe only) - T1 ISDN PRI T1.619a - T1 ISDN PRI NI-2 - E1 ISDN PRI (Q.955.3/Q.735.3) (Europe only)	- 2W Analog - ISDN BRI NI-1/NI-2 ▪ ISDN BRI T1.619a	▪ Ethernet TCP/IP ▪ Serial RS-232 ▪ X.25 or BX.25	
Feature/Capability				
▪ Code Restriction & Diversion (2.1.4) ▪ Public Safety Features (2.4) ▪ Local office Test lines (2.5.1) ▪ Outside Plant Test lines (2.5.2) ▪ Manual Testing (2.5.4) ▪ Trunk Group -make busy (2.5.5) ▪ Trunk Group- Make Idle (2.5.6) ▪ Carrier Group Alarms	▪ ISDN NI 1/2 PRI (2.3.4) ▪ CAS MLPP (3.4.1) ▪ PRI MLPP (3.4.2) ▪ CCS7 MLPP (3.4.3) ▪ ISDN MLPP PRI (3.7) ▪ MLPP CCS7 (3.9) ▪ CAS to CCS trunk interworking (3.10) ▪ DSN IST Call Processing (4.4) ▪ DSN switch outpulsing (4.5.2) ▪ Trunk Supervisory Signaling (5.3) ▪ Control Signaling (5.4)	▪ DN Identification (2.1.1) ▪ PBX line (2.3.1) ▪ Direct inward dial (2.3.2) ▪ ISDN NI 1/2 BRI (2.3.3) ▪ Analog Line (2.3.5) ▪ Analog Line MLPP (3.5) ▪ ISDN MLPP BRI (3.6) ▪ 2W User Access	▪ NM Manual controls (3.13) ▪ Data Collection (3.14) ▪ NTMOS (9.1) ▪ Common Data Requirements (9.2.1) ▪ Cct Switched Net. Measurements (9.2.2) ▪ CCS NM (9.2.3) ▪ ISDN Measurements (9.2.4) ▪ Traffic Capacity (9.2.5)	▪ Precedence & Preemption (2.2.1) ▪ Call display (2.2.2) ▪ Class of service override (2.2.3) ▪ Busy override/verification (2.2.4) ▪ Night Service (2.2.5) ▪ Auto recall of attendant (2.2.6) ▪ Calls in queue (2.2.7) ▪ Release to Pivot (2.2.8)

Multi-Function Switch				
Switch	**Trunk**	**Line**	**NM**	**Attendant**
(2.5.7) - Preset Conferencing (2.6) - Address Translation (2.7) - Nailed-up connections (2.8) - Assured Dial Tone (2.9) - DSN hotline service (2.12) - MLPP (3.1) - Preemption in the Network (3.2) - Precedence Call Diversion (3.3) - Preset Conferencing MLPP (3.8.7) - COI (3.8.9) - Call Treatments (4.1) - Primary & Alternate Routing (4.2) - WWNDP (4.5.1) - Standard DNs (4.5.3) - Std test numbers (4.5.4) - Base Services - Abbrev. No. (4.5.5) - Digit Reception (4.5.6) - Digit Registration Capacity (4.5.7) - Screening (4.5.8) - Network Power (5.1) - Alerting Signals and Tones (5.5) - DSN Transmission (6) - IDLC (7.5) - Tandem Switching (8) - ISDN Generic Requirements (10) - Timing Modes (11.1)	- CCS7 (5.6) - ISDN DSS1 (5.7) - PCM-24 (7.1) - PCM-30 (7.2) (Europe only) - PCM-24/PCM-30 Interoperation (7.3)	(4.3.3) - Analog Line termination (4.3.4) - Line Signaling (5.2)	- Configuration Mgmt (9.3) - Fault Management (9.4) - AMA CDR (9.5.1) - Data Retention (9.5.2) - Auto Controls (9.6.1) - Overload Controls (9.6.2) - Manual Controls (9.6.3) - Treatment options (9.6.4) - Remote Access (9.7) - AMA (9.8)	

Figure B

Multi-Function Switch				
Switch	**Trunk**	**Line**	**NM**	**Attendant**
- Synchronization performance monitoring criteria (11.2) - DS1 traffic interfaces (11.3) - DSO Traffic interconnects (11.4) - Reliability (12) - Security (13)				

Notes:
1. Above features show title description and GSCR paragraph (in brackets).

End Office (EO) Switch				
Switch	**Trunk**	**Line**	**NM**	**Attendant**
	Interface			
	- T1 SS7 (T1.619a) - E1 SS7 (Q.955.3/Q.735.3) (Europe only) - T1 CAS MF R1 - T1 CAS DTMF - T1 CAS DP - El CAS MF R1 (Europe only) - El CAS DTMF (Europe only) - E1 CAS DP (Europe only) - T1 ISDN PRI T1.619a - T1 ISDN PRI NI-2 - El ISDN PRI (Q.955.3/Q.735.3) (Europe only)	- 2W Analog - ISDN BRI NI-1/NI-2 - ISDN BRI T1.619a	- Ethernet TCP/IP - Serial RS-232 - X.25 or BX.25	
Feature/Capability				
- Code Restriction & Diversion (2.1.4) - Public Safety Features (2.4) - Local office Test lines (2.5.1) - Outside Plant Test lines (2.5.2) - Manual Testing (2.5.4) Trunk Group -make busy (2.5.5) - Trunk Group- Make Idle (2.5.6) - Carrier Group Alarms (2.5.7) - Preset Conferencing (2.6) - Address Translation (2.7)	- ISDN NI 1/2 PRI (2.3.4) - CAS MLPP (3.4.1) - PRI MLPP (3.4.2) - CCS7 MLPP (3.4.3) - ISDN MLPP PRI (3.7) - MLPP CCS7 (3.9) - CAS to CCS trunk interworking (3.10) - DSN IST Call Processing (4.4) - DSN switch outpulsing (4.5.2) - Trunk Supervisory Signaling (5.3) - Control Signaling (5.4) - CCS7 (5.6) - ISDN DSS1 (5.7) - PCM-24 (7.1)	- DN Identification (2.1.1) - PBX line (2.3.1) - Direct inward dial (2.3.2) - ISDN NI 1/2 BRI (2.3.3) - Analog Line (2.3.5) - Analog Line MLPP (3.5) - ISDN MLPP BRI (3.6) - 2W User Access (4.3.3) - Analog Line termination (4.3.4)	- NM Manual controls (3.13) - Data Collection (3.14) - NTMOS (9.1) - Common Data Requirements (9.2.1) - Cct Switched Net. Measurements (9.2.2) - CCS NM (9.2.3) - ISDN Measurements (9.2.4) - Traffic Capacity (9.2.5) - Configuration Mgmt	- Precedence & Preemption (2.2.1) - Call display (2.2.2) - Class of service override (2.2.3) - Busy override/verification (2.2.4) - Night Service (2.2.5) - Auto recall of attendant (2.2.6) - Calls in queue (2.2.7) - Release to Pivot (2.2.8)

End Office (EO) Switch				
Switch	**Trunk**	**Line**	**NM**	**Attendant**
- Nailed-up connections (2.8) - Assured Dial Tone (2.9) - DSN hotline service (2.12) - MLPP (3.1) - Preemption in the Network (3.2) - Precedence Call Diversion (3.3) - COI (3.8.9) - Call Treatments (4.1) - Primary & Alternate Routing (4.2) - WWNDP (4.5.1) - Standard DNs (4.5.3) - Std test numbers (4.5.4) - Base Services - Abbrev. No. (4.5.5) - Digit Reception (4.5.6) - Digit Registration Capacity (4.5.7) - Screening (4.5.8) - Network Power (5.1) - Alerting Signals and Tones (5.5) - DSN Transmission (6) - IDLC (7.5) - ISDN Generic Requirements (10) - Timing Modes (11.1) - Synchronization performance monitoring criteria (11.2) - DS 1 traffic interfaces (11.3) - DSO Traffic interconnects (11.4)	- PCM-30 (7.2) (Europe only) - PCM-24/PCM-30 Interoperation (7.3)	- Line Signaling (5.2)	(9.3) - Fault Management (9.4) - AMA CDR (9.5.1) - Data Retention (9.5.2) - Auto Controls (9.6.1) - Overload Controls (9.6.2) - Manual Controls (9.6.3) - Treatment options (9.6.4) - Remote Access (9.7) - AMA (9.8)	

End Office (EO) Switch				
Switch	**Trunk**	**Line**	**NM**	**Attendant**
- Reliability (12) - Security (13)				

Notes:
1. Above features show title description and GSCR paragraph (in brackets).

Small End Office (SMEO) Switch				
Switch	**Trunk**	**Line**	**NM**	**Attendant**
	Interface			
	- T1 CAS DTMF - T1 CAS DP - El CAS MF Rl (Europe only) - El CAS DTMF (Europe only) - El CAS DP (Europe only) - T1 ISDN PRI T1.619a - T1 ISDN PRI NI-2	- 2W Analog - ISDN BRI NI-1/NI-2 - ISDN BRI T1.619a	- Ethernet TCP/IP - Serial RS-232 - X.25 or BX.25	
Feature/Capability				
- Code Restriction & Diversion (2.1.4) - Public Safety Features (2.4) - Trunk Group -make busy (2.5.5) - Trunk Group- Make Idle (2.5.6) - Carrier Group Alarms (2.5.7) - Assured Dial Tone (2.9) - DSN hotline service (2.12)	- ISDN NI 1/2 PRI (2.3.4) - CAS MLPP (3.4.1) - PRI MLPP (3.4.2) - ISDN MLPP PRI (3.7) - DSN IST Call Processing (4.4) - DSN switch outpulsing (4.5.2) - Trunk Supervisory Signaling (5.3) - Control Signaling (5.4) - ISDN DSS1 (5.7) - PCM-24 (7.1)	- DN Identification (2.1.1) - ISDN NI 1/2 BRI (2.3.3) - Analog Line (2.3.5) - Analog Line MLPP (3.5) - ISDN MLPP BRI (3.6) - 2W User Access (4.3.3)	- Data Collection (3.14) - NTMOS (9.1) - Common Data Requirements (9.2.1) - Cct Switched Net. Measurements (9.2.2) - ISDN Measurements (9.2.4) - Traffic Capacity (9.2.5) - Configuration Mgmt (9.3) - Fault Management (9.4) - AMA CDR (9.5.1)	

Small End Office (SMEO) Switch				
Switch	**Trunk**	**Line**	**N M**	**Attendant**
▪ **MLPP (3.1)** ▪ Preemption in the Network (3.2) ▪ Precedence Call Diversion (3.3) ▪ Call Treatments (4. I) ▪ Primary & Alternate Routing (4.2) ▪ WWNDP (4.5.1) ▪ Standard DNs (4.5.3) ▪ Base Services ▪ Abbrev. No. (4.5.5) ▪ Digit Reception (4.5.6) ▪ Digit Registration Capacity (4.5.7) ▪ Screening (4.5.8) ▪ Network Power (5.1) ▪ Alerting Signals and Tones (5.5) ▪ DSN Transmission (6) ▪ IDLC (7.5) ▪ ISDN Generic Requirements (10) ▪ Timing Modes (11.1) ▪ Reliability (12) ▪ Security (13)	▪ PCM-30 (7.2) (Europe only) ▪ PCM-24/PCM-30 Interoperation (7.3)	▪ Analog Line termination (4.3.4) ▪ Line Signaling (5.2)	▪ Remote Access (9.7) ▪ AMA (9.8)	

Notes:
1. Above features show title description and GSCR paragraph (in brackets).

Private Branch Exchange (PBX) 1 – MLPP				
Switch	**Trunk**	**Line**	**NM**	**Attendant**
	Interface			
	- T1 ISDN PRI T1.619a - T1 ISDN PRI NI-2	- 2W Analog - ISDN BRI NI-l/NI-2 - ISDN BRI T1.619a	- Ethernet TCP/IP - Serial RS-232 - X.25 or BX.25	
Feature/Capability				
- MLPP (3.1) - Preemption in the Network (3.2) - Precedence Call Diversion (3.3) - Call Treatments (4.1) - WWNDP (4.5.1) - Digit Reception (4.5.6) - Alerting Signals and Tones (5.5) - DSN Transmission (6) - ISDN Generic Requirements (10) - Timing Modes (11.1) - Reliability (12) - Security (13)	- ISDN NI 1/2 PRI (2.3.4) - PRI MLPP (3.4.2) - ISDN MLPP PRI (3.7) - Trunk Supervisory Signaling (5.3) - ISDN DSS1 (5.7) - PCM-24 (7.1)	- DN Identification (2.1.1) - ISDN NI 1/2 BRI (2.3.3) - Analog Line (2.3.5) - Analog Line MLPP (3.5) - ISDN MLPP BRI (3.6) - 2W User Access (4.3.3) - Analog Line termination (4.3.4) - Line Signaling (5.2)		

Notes:
1. Above features show title description and GSCR paragraph (in brackets).

APPENDIX 4

DOD GENERIC SWITCHING CENTER REQUIREMENTS (GSCR)

08 SEP 03

Echo Canceller (EC) Requirements

A4.1 Background

This appendix describes the requirements that must be met by all Echo Canceller (EC) devices for them to be certified and used in the Defense Switched Network (DSN).

The requirements contained in this appendix are based on:

a. Policy for DOD voice networks as outlined in the Chairman of Joint Chiefs of Staff Instruction (CJCSI) *62 15 .O 1 B, "Policy for Department of Defense Voice Networks ".* CJCSI 6215.01B defines the DSN as being "an interbase, nonsecure or secure C2 telecommunications system that provides end-to-end command use and dedicated telephone service, voice-band data, and dial-up VTC for C2 and non-C2 DOD authorized users in accordance with national security directives." The CJCS instruction further specifies the need for the DSN to offer military unique features (MUFs) such as Multi-Level Precedence and Preemption (MLPP) and military Network Management (NM).

b. *"Department Of Defense Voice Networks Generic Switching Center Requirements (GSCR) ", 08* Sep 2003.

c. Department of Defense Instruction (DODI) 8 100.3, 16 January 2004, *"Department of Defense (DoD) Voice Networks ".*

A4.2 Purpose

The purpose for developing this appendix to the Defense Switch Network (DSN) Generic Switching Center Requirements (GSCR) document is to specify echo canceller requirements so they can be certified for use in the DSN. Echo cancellers are voice operated devices placed in the 4-wire portion of a circuit (which may be an individual circuit path or a path carrying a multiplexed signal) and are used for reducing the echo by subtracting an estimated echo from the circuit echo. In the DSN, ECs are implemented in a split manner, with one on each of the two sides of a transmission path. A properly designed EC does not degrade the bearer channel signal.

Echo cancellers are used to minimize echo in circuits containing hybrids that convert four- to two-wire connections. They compensate for the effect of high, end-to-end, delay that result in unacceptable voice listening performance. In general, echo cancellers are needed on long terrestrial trunks and on all trunks routed via satellite. They mitigate echo mainly by estimating the voice signal's pattern, making a model of that pattern, storing it and subtracting it from the

echo returning from the distant end, while leaving intact the information flow coming from the distant end. ECs may be implemented as stand alone devices or integrated into the transmission interfaces of switches or other network devices.

As a minimum, compliance to Section 1 of the GSCR is required to include the following requirements that are features and capabilities considered necessary for a particular switch type to support warfighter missions in DoD. These features and capabilities will require certification prior to introduction into the DSN.

Conditional requirements are features and capabilities that are not considered critical for DoD mission support based on DoD policies. It is however, recognized that such features do have utility for some users or for specific operations. To ensure interoperability and consistency of the Multi-Level Precedence and Preemption (MLPP) functionalities across all platforms, these features and capabilities are specified with set parameters. If these features and capabilities are provided, the device shall perform and meet the specifications as identified in this GSCR appendix.

A4.3 Applicability

This appendix applies to all echo cancellers procured or leased for installation in the DSN. All services, features and functions (both unique military and standard commercial) identified in the GSCR and its associated Appendixes are to be implemented in DSN assets including switches, trunks, lines, Customer Premises Equipment (CPE), and ancillary equipment. This appendix also applies to upgrades and new software loads for existing equipment.

The GSCR is the governing specification document that takes precedence over the explicit or implicit requirements of subsidiary or reference documents, standards, and specifications. In the event of conflict, the explicit requirements of the GSCR take precedence over the explicit or implicit requirements of the LATA Switching Systems Generic Requirements (LSSGR), Generic Requirements (GR), and DISAC 370-175-13.

A4.4 Definitions

New call: New calls are defined to be not only when a trunk is seized and used to transmit call control signaling after being in a idle state, as defined by the signaling used on the trunks that have been selected to carry the call attempt (i.e., wink for wink start trunks, IAM for SS7 trunks, etc.), but also preempts for reuse of a bearer channel, (such as a DSO in a PCM-24 or PCM-30 transmission facility) are defined to also be a new call. Preempt for reuse of a trunk is used to support MLPP calls in the DSN (see Section 3 in the GSCR).

Required: These are features and capabilities considered necessary for devices covered by this appendix for DoD mission support based on DoD policies. These features and capabilities require certification prior to introduction into the DSN.

Conditional: These are features and capabilities that are not considered critical for DoD mission support based on DoD policies. It is recognized however, that such features do have utility for some users or for specific operations. If these features and capabilities are provided, the devices covered by this appendix shall perform and meet the specifications as identified.

A4.5 Requirements

This section provides the requirements for echo control equipment in the DSN. All echo canceller devices are required to meet the below requirements.

A4.5.1 Echo Canceller Functionality

[Required] The echo canceller shall meet the requirements of ITU-T Recommendation G. 16.5, *"Echo cancellers "*, ITU-T Recommendation *G. 168 "Digital network echo cancellers "*, and Section 7 of Telcordia Technologies SR-227.5, *"Telcordia Notes on the Networks"*.

[Required] The EC shall support at least 64 ms echo tail length.

[Required] The Mean Opinion Score (MOS) technique, if applicable, and the Perceptual Evaluation of Speech Quality (PESQ) measurement, ITU-T Recommendation P.862, *"Perceptual evaluation of speech quality (PESQ), an objective methodfor end-to-end speech quality assessment of narrowband telephone networks and speech codecs "*, shall be used to assess the clarity of end-to-end voice circuits on which echo cancellers are installed. The voice quality shall have a mean opinion score (MOS) of 4.0 or better, as measured in accordance with JTA voice quality standards.

[Required] The EC shall be able to determine when a new call is being established and apply echo cancellation IAW this appendix.

[Required] The EC shall have at a minimum the following two operational states and they shall be settable by the Network Management system (see Section A4.5.7 of this appendix), local control interface, or front/back control panel on a per DSO basis.

a. Normal: Echo cancellation will remain in the enabled state between calls and during calls unless it is disabled as defined in this appendix.

b. Forced off: In this mode, the EC shall not enable echo cancellation until the forced off state has been changed.

A4.5.2 2100 Hz Tone Disable Capability

[Required] On a per-channel basis, a 2 100 Hz tone shall be recognized by the EC, causing the EC to disable, as specified in ITU-T Recommendation *G. 168, "Digital network echo cancellers".*

[Required] Re-enabling the EC, after the echo cancellation function has been disabled by the tone, it shall remain in a disabled state until one of the following events occur.

a. No single-frequency sinusoid is present as defined in Section 7 of G. 168.

b. The end of the call is detected.

c. The end of data transmission is detected. This may be detected by either the lack of modem or fax tones on the channel or by some proprietary method.

[Required] ECs shall be capable of determining when a channel is in use (i.e., a call is active on the channel) or not. This function shall not interfere in any manner with an active call.

[Required] The 2100 Hz disabling tone shall override all other control functions and shall disable echo cancellation for that particular call.

A4.5.3 EC Hardware

[Required] The EC shall be able to be connected to analog or digital transmission facilities.

[Conditional] If an analog trunk interface is provided, then the EC shall be able to provide echo cancellation on a per-trunk basis.

[Conditional] If a digital trunk interface is provided, then the EC hardware shall be implemented on a digital basis without conversion to analog. The digital echo canceller shall treat all DSO channels (PCM-24, PCM-30, or more for SONET) independently.

A4.5.4 Echo Cancellation on PCM Circuits

[Required] PCM-24 or PCM-30 interfaces shall be in accordance with the requirements in Section 7 of the GSCR as applicable for the interface.

[Required] When the bearer channel is used for 56 or 64 kb/s digital data or submultiples of 64 kb/s, the digital ECs shall not cause a loss of bit integrity.

[Required] ECs inserted in a PCM-24 path utilizing channel-associated signaling (i.e., "robbed bit") shall have a selectable setting to exclude the signaling bits from the cancellation process.

[Required] The EC shall be capable of performing echo cancellation for speech and audio bearer capability calls on the full 64 kb/s signal.

[Required] Echo canceller shall not interfere with the functionality of CCS7 continuity check tones.

A4.5.5 External Echo Cancellers

[Conditional] Echo cancellers that are placed on network facilities and are not controlled by a switch or adjunct controller, shall be able to determine when a new call is a voice or data call. For voice calls, echo cancellation shall be enabled and for data calls, echo cancellation shall be disabled.

A4.5.6 Internal Echo Cancellers

[Conditional] Echo cancellers that are placed on network facilities and are controlled by a switch or adjunct controller shall enable or disable it's echo cancellation capability based on input from the local switch or adjunct controller. The EC shall receive this input via a direct connection to the switch's or adjunct controller's internal messaging pathways or by using an external communications port. For voice calls, echo cancellation shall be enabled and for data calls, the echo cancellation shall be disabled.

A4.5.7 Device Management

[Required] All echo canceller devices in the DSN will be monitored and managed by the Advanced DSN Integrated Management Support System (ADMISS) as described in the GSCR Section 9. The echo canceller must be able to be centrally monitored and managed as per Sections 9.3 and 9.4 of the GSCR.

[Required] Echo cancellers shall be capable of performing a self-test diagnostic function on non-active and active channels on a noninterference basis and report any failures to the assigned NM system.

[Conditional] If the EC is not considered to be an integral part of the switch or larger functional entity, then a front or back panel and/or external console control capability shall be provided for local management.

[Required] The EC shall enable or disable it's echo cancellation capability based on input from a local switch or adjunct controller. The EC shall receive this input via a direct connection to the switch's or adjunct controller's internal messaging pathways or by using an external communications port.

A4.5.8 Reliability

[Required] The EC reliability and availability shall conform to Section 5 of Telcordia Technologies Generic Requirements GR-5 12-CORE, *"LSSGR: Reliability, Section 12 "*, Issue 2, January 1998 as specified for individual devices. The vendor shall provide a reliability model for the system, showing all calculations and showing also how the overall availability will be met, if requested.

A4.5.9 Security

[Required] If the EC is not considered to be an integral part of the switch, then it shall conform to the requirements outlined in Department of Defense Instruction (DODI) 5200.40, 30 December *1997, "Defense Information Technology Security Certification and Accreditation Process (DITSCAP) "* and the DSN Security Technical Implementation Guide. Otherwise, the switch is responsible for the adherence to the above mentioned requirements.

A4.6 EC Application Guidelines

This section describes the application of EC devices in the DSN and is for information only.

The need for echo control devices becomes apparent as the round trip delay of the facilities used totals more than 30 ms. An EC is actually required at both ends of the PCM or analog transmission system when the round trip delay is greater than 20 ms. While round-trip delays of less than 30 ms are tolerable to normal telephonic speech and not perceived by the user as an echo condition, this quantity of delay results in a noticeable "hollowness" to the circuit, as though the caller were talking in a reverberant room or tunnel. If the DSN were only a fraction of its current size and complexity, individual trunks that cause the delay could be singled out and provided with echo control. But because of the complexity of all possible connections in a global switched network, the delay introduced by digital processing, and the physics of how an EC functions, a different approach must be taken.

A4.6.1 EC Placement

ECs are placed on the **(see Error! Reference source not found.):**

a. Multi-Function Switch (MFS) end of all circuits interconnecting with MFSs or Stand-Alone Switches (SAS). This configuration allows for the echo cancellation for calls terminating on the MFS or calls terminating at close-in (less than 300 miles distant) End Offices (EO) or Private Branch Exchanges (PBX).

b. The Tandem Switch end of all circuits interconnecting EOs or PBXs with the SAS.

c. Both ends of all circuits over 300 miles in length interconnecting EOs or PBXs with either MFSs or SASs.

d. The MFS/EO/PBX end of all circuits interconnecting with networks other than the DSN.

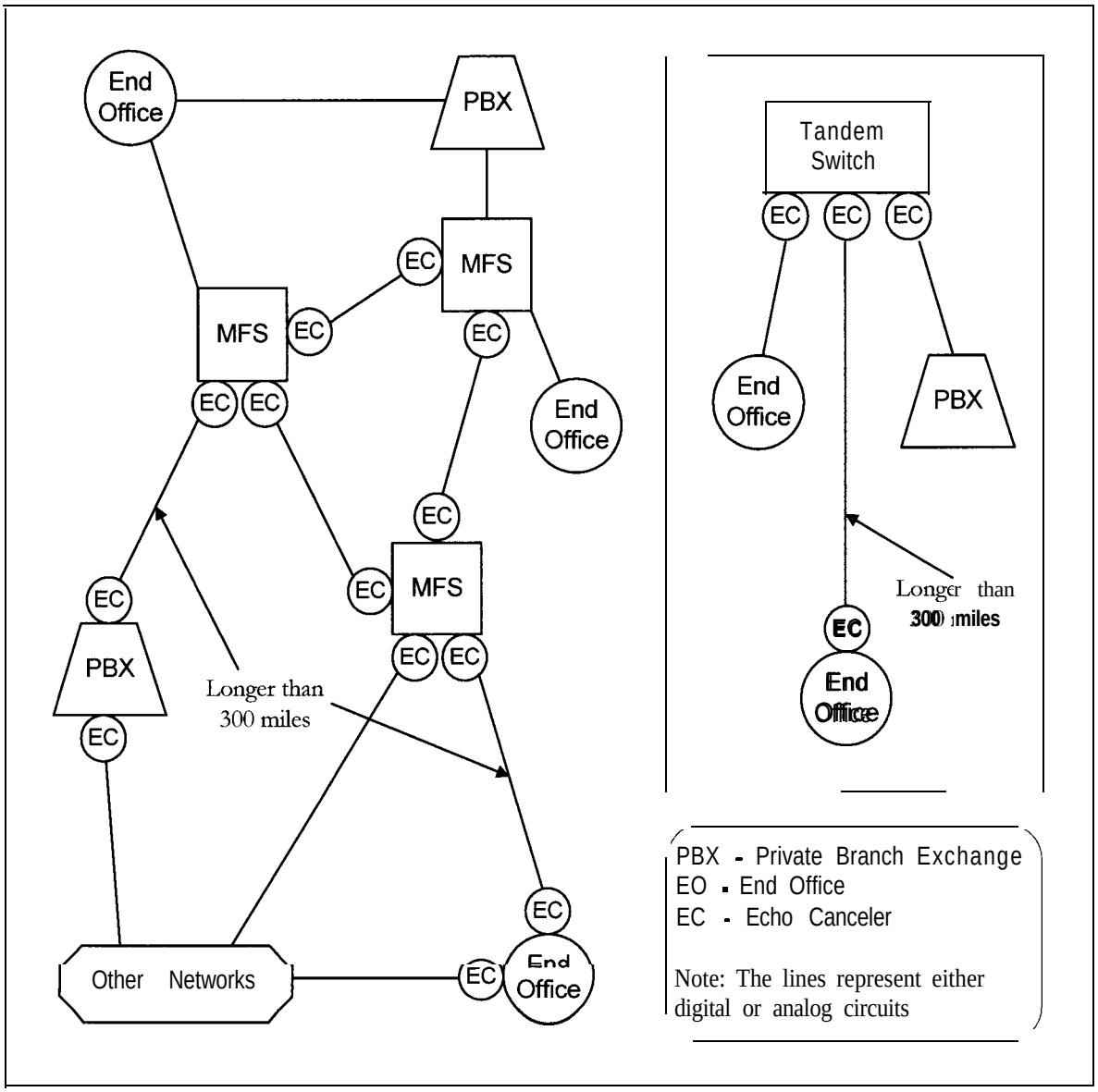

Figure A4.1 - Echo Canceller Applications in the DSN

A4.6.2 Additional Guidance

EO and PBX ECs need minimum (typically 8 ms) End Path Delay Capability. Each MFS configuration requires that the End Path Delay be computed for all subtending EOs and PBXs (other than those providing their own ECs under the 300 mile rule). An End Path Delay Capability greater than the highest End Path Delay figure (from the computations) will be standard for all ECs on a particular MFS.

A4.6.3 Exceptions

Best engineering judgment may be applied to EC placement in special cases where numerous MFSs are in close proximity and the provisioning of ECs on all MFS-to-MFS trunks is not cost effective. However, placing ECs only on egress circuits to a DSN switch cluster or enclave increases the end path delay capability required for the "gateway" ECs. The possibility of intra-enclave circuit tandeming between the EC and the furthest possible (in terms of delay) enclave hybrid complicates the determination of required end path delay capability. The added complexity is due to the numerous possible intra-enclave paths and the cumulative delay of a series of switches, multiplexers, etc. If the longest (in terms of delay) possible end path delay route is not accurately identified, the end path delay capability calculated may be too small to effectively cancel echo for all possible circuit connections.

APPENDIX 5

DOD GENERIC SWITCHING CENTER REQUIREMENTS (GSCR)
08 SEP 2003
DSN Switch SONET Digital Trunk Interface

A5.1 Background

This appendix describes the requirements that must be met by all switch SONET Digital Trunk Interface (SDTI) for them to be certified and used in the Defense Switched Network (DSN).

The requirements contained in this appendix are based on:

a. Policy for DOD voice networks as outlined in the Chairman of Joint Chiefs of Staff Instruction (CJCSI) 6215.01B, *"Policy for Department of Defense Voice Networks"*. CJCSI 62 15.01B defines the DSN as being "an interbase, nonsecure or secure C2 telecommunications system that provides end-to-end command use and dedicated telephone service, voice-band data, and dial-up VTC for C2 and non-C2 DOD authorized users in accordance with national security directives." The CJCS instruction further specifies the need for the DSN to offer military unique features (MUFs) such as Multi-Level Precedence and Preemption (MLPP) and Network Management (NM).

b. *"Department Of Defense Voice Networks Generic Switching Center Requirements (GSCR) ", 08* Sep 2003.

c. Department of Defense Instruction (DODI) 8100.3, 16 January *2004, "Department of Defense (DoD) Voice Networks ".*

A5.2 Purpose

The purpose of this appendix to the Defense Switch Network (DSN) Generic Switching Center Requirements (GSCR) document is to specify the switch SONET Digital Trunk interface requirements so they can be certified for use in the DSN.

Switch digital trunk interfaces are used for bandwidth efficiency and utilization of higher density carrier systems and for reducing the need for individual DS1 switch termination hardware and software.

With the rapid growth of optical fiber transmission facilities, it has become appropriate to describe generic requirements for a high-capacity digital switch trunk interface. A high-capacity trunk interface on the digital switch that is compatible with Synchronous Optical Network

(SONET) allows interconnection with SONET Network Elements (NEs). SONET defines Optical Carrier 3 (OC-3) signals and their equivalent electrical Synchronous Transport Signals (STS-N). These signals operate at a rate of N x 5 1.840 Mb/s. The SONET digital switch trunk interface provides a direct termination of fiber optic transmission systems. The synchronous optical OC-3 (N x 5 1.84 Mb/s) digital switch interface permits termination of N x 28 Virtual Tributaries (VT1.5s). The SONET digital switch trunk interface transmits an OC-3 (or STS-N signal) containing VT1.5s. These VT1.5s may terminate at another SONET digital switch interface, or they may terminate on a SONET multiplex that outputs Digital Signal Level 1 (DS 1) to an existing DS1 switch interface. SONET is a transmission network constructed as a progressive hierarchy of synchronously inter-leaved tributary signals.

The rapid growth in the deployment of transmission facilities at DS3 and higher rates provides motivation to seek efficient ways of handling these high-speed signals in the central office. A high capacity digital switch interface, such as the SONET digital switch interface, will be integral to defining the future DSN network architectures that are intended to make efficient use of transmission facilities and offer potential for new services. However, because the current, typical switch-to-switch cross-section is smaller than the capacity of an OC- 1, additional transmission equipment such as a SONET Add-Drop Multiplex (ADM) and Wideband Digital Cross-connect System (WDCS) may be required to build up suitably sized bundles for the high-capacity switch termination. The value of N for an efficient high-capacity OC-3 signal termination on the SONET digital switch interface depends on the evolution of SONET. Also, different vendors may have different switching architectures that may be optimized for different OC-3s. Because the current, typical switch-to-switch cross-section is smaller than the capacity of an OC-1, a high-capacity OC-N signal, with N greater than 3, may be under-utilized and inefficient to terminate on the digital switch.

As a minimum, compliance to Section 1 of the GSCR is required to include this appendix requirements that are features and capabilities considered necessary for a particular switch type to support Warfighter missions in DoD. These features and capabilities will require certification prior to introduction into the DSN.

Conditional requirements are features and capabilities that are not considered critical for DoD mission support based on DoD policies. It is however, recognized that such features do have utility for some users or for specific operations. To ensure interoperability and consistency of the Multi-Level Precedence and Preemption (MLPP) functionalities across all platforms, these features and capabilities are specified with set parameters. If these features and capabilities are provided, the device shall perform and meet the specifications as identified in this GSCR appendix.

A5.3 Applicability

This appendix applies to all switch SONET digital trunk interfaces procured or leased for installation in the DSN. All services, features and functions (both unique military and standard commercial) identified in this GSCR and associated Appendixes are to be implemented in DSN SONET Digital Trunk Interface. This specification also applies to upgrades and new software loads for existing SONET Digital Trunk Interface equipment.

This Generic Switching Center Requirements (GSCR) appendix complies to the Telcordia Technologies GR-782-CORE, *"SONET Digital Switch Trunk Interface Criteria"*, Issue 1 June 2000 for an OC-3 (or STS-N) interface to a Digital Switching System (DSS) to be used in the DSN trunk networks. The typical SONET digital switch interface functions are described as pertaining to the DSN intraoffice environment. The DSN intraoffice environment is viewed as a facility that contains at least one DSN center. Unless otherwise specified, it is assumed that the SONET digital switch interface is in the intraoffice environment. An interoffice SONET digital switch trunk interface is optional. It is assumed that, most of the time, the SONET digital switch trunk interface will be connected to an ADM or WDCS in the same office, via an intraoffice connection. It is further assumed that the majority of the performance monitoring will be done within the transport network (i.e., at ADMs and WDCSs). Thus, for an intraoffice connection, the switch interface unit will not need to process several of the overhead bytes because they will have already been processed by an ADM or WDCS before the signal arrives at the switch. Therefore, this GSCR Appendix takes into account two switch interface types: an intraoffice interface and an interoffice interface, where the latter processes the overhead as in the transport network. This document complements Telcordia Technologies GR-253-CORE, *"Synchronous Optical Network (SONET) Transport Systems: Common Generic Criteria"*, Issue 3, September 2000 which describes the SONET signal hierarchy and formats, that includes common criteria for the SONET digital switch interface and other SONET network elements. Therefore, common criteria are referenced in GR-253-CORE, and are not repeated in this appendix unless it is considered to be a part of the required MUF features and functionalities. The criteria for the interoffice switch interface comply with GR-253-CORE however, the criteria for the intraoffice switch interface differ from GR-253-CORE because the switch interface is not addressed as a transport device. This GSCR Appendix, which addresses the SONET interface for the trunk side of a digital switch, is distinct from Telcordia Technologies GR-303-CORE, *"Integrated Digital Loop Carrier System Generic Requirements, Objectives, and Interface"*, Issue 4, December *2000.*

The GSCR is the governing specification document that takes precedence over the explicit or implicit requirements of subsidiary or reference documents, standards, and specifications. In the event of conflict, the explicit requirements of the GSCR take precedence over the explicit or implicit requirements of the LATA Switching Systems Generic Requirements (LSSGR), Generic Requirements (GR), and DISAC 3 70-175-13.

A5.4 Definitions

Required: These are features and capabilities considered necessary for devices covered by this appendix for DoD mission support based on DoD policies. These features and capabilities require certification prior to introduction into the DSN.

Conditional: These are features and capabilities that are not considered critical for DoD mission support based on DoD policies. It is recognized however, that such features do have utility for some users or for specific operations. If these features and capabilities are provided, the devices covered by this appendix shall perform and meet the specifications as identified.

A5.5 Requirements

This section provides the requirements for switch SONET digital trunk interfaces in the DSN. All switch SONET digital trunk interfaces are required to meet the below requirements.

A5.5.1 Miltary Unique Features

[Required] The features and functions identified in this document shall support the full complement of MUFs to include Channel Associated Signaling (CAS), Integrated Services Digital Network (ISDN) NI-1/2, and DSN backbone using Common Channel Signaling 7.

A5.5.2 Interface

[Required] The SONET interface shall be in compliance to GR-303-CORE for an OC-3 interface between an Integrated Digital Loop Carrier (IDLC) system's remote digital terminal and the line side of a local digital switch.

[Required] The SONET interface shall meet the requirements of GR-253-CORE and GR-782-CORE.

[Required] The criteria for the various SONET optical and electrical interfaces shall conform to GR-253-CORE. Such an interface shall also comply to GR-303-CORE.

[Required] The SONET digital trunk interface shall, as a minimum, comply to ANSI T1.105-*2001*, *"Synchronous Optical Network (SONET) - Basic Description including Multiplex Structure, Rates, and Formats "*.

[Required] All features and functions that are defined in the GSCR to operate at a DS1 rate shall work transparently at the VT1.5 rate over the SONET interface.

[Required] SONET digital interface shall support provisioning of transport levels as low as the DS1 rate for separately grouping of various categories of traffic such as voice, data, satellite, and terrestrial transmission.

[Required] The SONET digital switch trunk interface shall be capable of DSO call processing and routing and shall route the DS0s within a VT1.5 in a way that presents the DS0s to the DSN for processing.

A5.5.3 ROUTE Assignment

[Required] SONET digital trunk interface shall support "ROUTE" assignment of trunk group(s) at the OC-3 (highest) and down to DSO (lowest) rates as defined in Section 4.2 of the GSCR and shall support the signaling requirements as defined in Table l-3 of the GSCR.

A5.5.4 Facility Alarms

[Required] SONET digital trunk interface shall provide maintenance signals that include the following failure states as defined in GR-253-CORE for loss of signal, loss of frame, loss of pointer, and equipment failures.

- Line AIS.
- Line FERF.
- STS Path AIS.
- STS path Yellow.
- VT Path AIS.
- VT path Yellow.

Code processing is necessary for all applications for maintenance related activities.

[Required] SONET digital trunk interface shall conform to Section 7.2 of GR-782-CORE for AIS and Yellow signal processing to include signal processing for rates as low as DS 1.

[Required] SONET digital trunk interface shall process DSO AIS and transmit DSO RAI (Yellow) in accordance with GR-253-CORE.

A5.5.5 Synchronization

[Required] SONET digital trunk interface shall meet the common synchronization requirements specified in GR-253-CORE and GR-5 18-CORE, *"LSSGR: Synchronization Section 18"*, Issue 1, May 1994, and GR-436-CORE, *"Digital Network Synchronization Plan "*, Issue 1, June 1994, Revision 1, June 1996.

[Required] SONET digital trunk interface shall meet the Sinusoidal Jitter Tolerance requirements specified in GR-253-CORE. The SONET digital switch interface falls under Category II in GR-253-CORE.

[Required] SONET digital trunk interface shall meet the Jitter Generation requirements specified in GR-253-CORE.

[Required] SONET digital trunk interface shall meet the generic Wander requirements per GR-253-CORE, and shall be able to accommodate at least 1 0-µsec of wander over a 24-hour period (the maximum amount of wander expected to appear at these interfaces).

[Required] As defined in Section 6.6 of GR-782-CORE, the 24 DSO (VT1.5) signals not using out-slot signaling shall have an all "zeros" idle code inserted into the appropriate signaling bit positions within the VTl.5 stream. A mixture of DSN CCS and out-slot signaling may exist on a VT1.5 basis in an OC-3 interface as DSN CCS evolves. Therefore, both DSN CCS and out-slot signaling are required.

A5.5.6 Reliability

[Required] The SONET digital trunk interface shall meet the requirements contained in GR-874-CORE, *"An Introduction to the Reliability and Quality Generic Requirements (RQGR)",* Issue 3, April 1997 and the requirements for switching systems specified in TR-NWT-000284, *"Reliability and Quality Switching Systems Generic Requirements (RQSSGR)",* Issue 2, October 1990. Additionally, the SONET digital trunk interface shall conform to the reliability objectives for switching systems, including integrated digital terminations, as specified in GR-5 12-CORE, *"LSSGR: Reliability, Section* 12*",* Issue 2, January 1998.

A.5.5.7 Security

[Required] The SONET digital trunk interface shall not affect the switch meeting the requirements contained in Telcordia Technologies GR-8 15-CORE, "Generic Requirements for Network Element/Network System (NE/NS) Security", Issue 2, March 2002, and conform to the requirements outlined in DODI 5200.40, 30 December 1997, "Defense Information Technology Security Certification and Accreditation Process (DITSCAP) and the DSN Security Technical Implementation Guide as applicable.

APPENDIX 6

DOD GENERIC SWITCHING CENTER REQUIREMENTS (GSCR)
08 SEP 03
Integrated Access Switch/System (IAS) Requirements

A6.1 Background

This appendix describes the requirements that must be met by all Integrated Access Switch/System (IAS) Customer Premise Equipment (CPE) devices for them to be certified and used in the Defense Switched Network (DSN). An IAS is an ISDN device with one or more PRI interfaces to a DSN switch. It will only be used to support video and data services.

The requirements contained in this appendix are based on:

a. Policy for DOD voice networks as outlined in the Chairman of Joint Chiefs of Staff Instruction (CJCSI) 62 15.0 1 B, *"Policy for Department of Defense Voice Networks ".* CJCSI 62 15 .O 1 B defines the DSN as being "an interbase, nonsecure or secure C2 telecommunications system that provides end-to-end command use and dedicated telephone service, voice-band data, and dial-up VTC for C2 and non-C2 DOD authorized users in accordance with national security directives." The CJCS instruction further specifies the need for the DSN to offer military unique features (MUFs) such as Multi-Level Precedence and Preemption (MLPP) and military Network Management (NM).

b. *"Department Of Defense Voice Networks Generic Switching Center Requirements (GSCR) ", 08* Sep 2003.

c. Department of Defense Instruction (DODI) 8 100.3, 16 January *2004, "Department of Defense (DoD) Voice Networks ".*

A6.2 Purpose

The purpose of this Appendix to the Defense Switch Network (DSN) Generic Switching Center Requirements (GSCR) document is to specify the IAS Customer Premise Equipment (CPE) requirements so it can be certified for use in the Defense Switched Network (DSN).

A6.3 Applicability

This appendix applies to all DSN IAS CPE devices/systems procured or leased for installation in the DSN. All services, features and functions (both unique military and standard commercial) identified in this GSCR and associated Appendixes are to be implemented in DSN assets including switches, trunks, lines, Customer Premises Equipment (CPE), and ancillary equipment. This specification also applies to upgrades and new software loads for existing equipment.

The GSCR is the governing specification document that takes precedence over the explicit or implicit requirements of subsidiary or reference documents, standards, and specifications. In the event of conflict, the explicit requirements of the GSCR take precedence over the explicit or implicit requirements of the LATA Switching Systems Generic Requirements (LSSGR), Generic Requirements (GR), and DISAC 370-175-13.

A6.3.1 Definitions

Integrated Access Switch (IAS): A CPE system that interconnects a DSN switch and Terminal Equipment (TE) such as Inverse Multiplexers (IMUXs), routers, VTC (Video Teleconference) Codecs, VTC Monitors, and Multipoint Control Units (see Figure A6.2). The IAS is able to originate multiple data and/or video calls IAW the world-wide numbering and dialing plan (WWNDP). Depending on the local implementation, PRI to PRI, PRI to BRI or BRI to PRI, interconnection is accomplished by the IAS. The IAS does not possess any functions of Multi-Level Precedence and Preemption (MLPP), but shall be able to originate calls that can be interpreted by the DSN switch as precedence calls and may be preempted on the DSN switching platforms and network trunks (see Figure A6.3). The IAS shall be provisioned in a manner such that the number of provisioned TE interface bearer channels shall not exceed the number of provisioned DSN or commercial interface bearer channels. This is to reduce the possibility of a call destined for a TE from being blocked by the DSN or commercial interfaces on the IAS not having available bearer channels for this call. It should also be noted that VTC call inherently has a “ROUTINE” precedence level. A typical layout of the IAS is illustrated in Figure A6.4.

Required: These are features and capabilities considered necessary for devices covered by this appendix for DoD mission support based on DoD policies. These features and capabilities require certification prior to introduction into the DSN.

Conditional: These are features and capabilities that are not considered critical for DoD mission support based on DoD policies. It is recognized however, that such features do have utility for some users or for specific operations. If these features and capabilities are provided, the switch shall perform and meet the specifications as identified in this appendix.

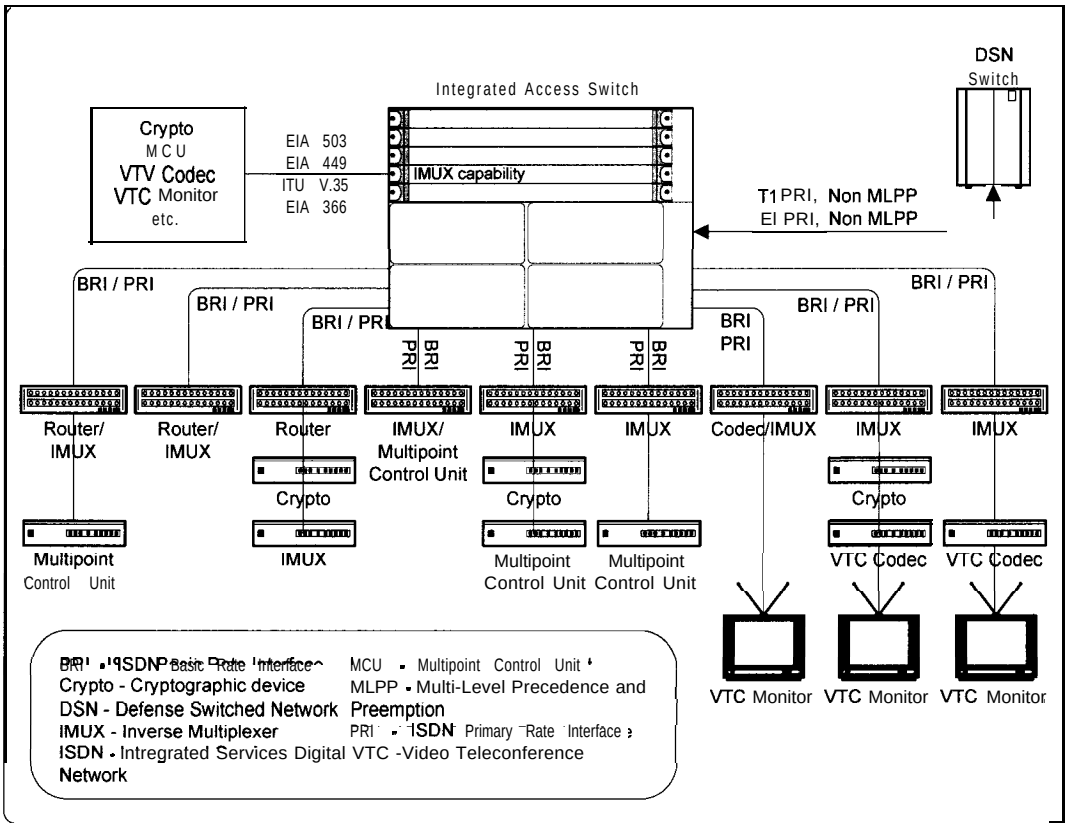

Figure A6.2 - Typical Connections for an Integrated Access Switch

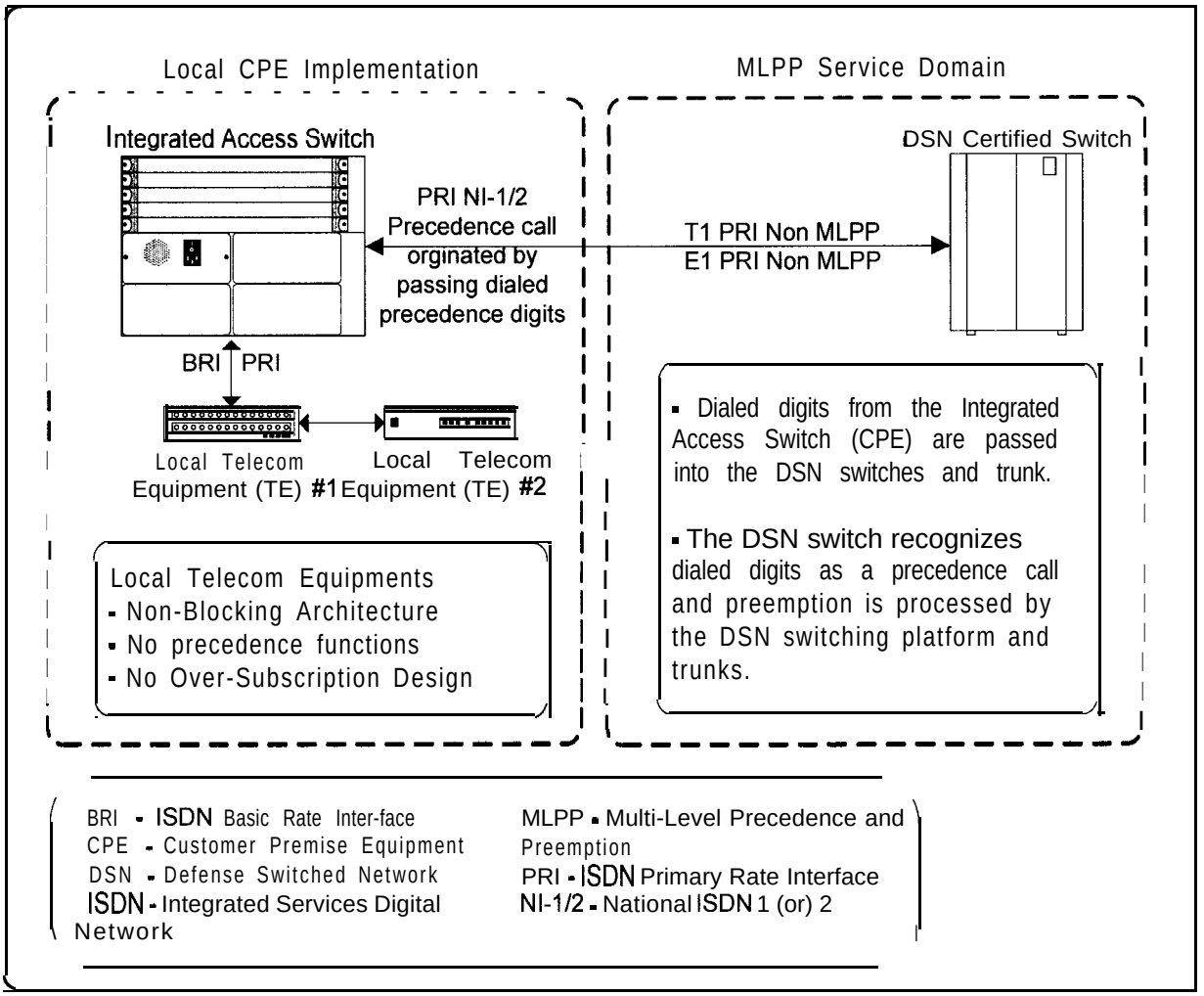

Figure A6.3 - MLPP Implementation and the Integrated Access Switch

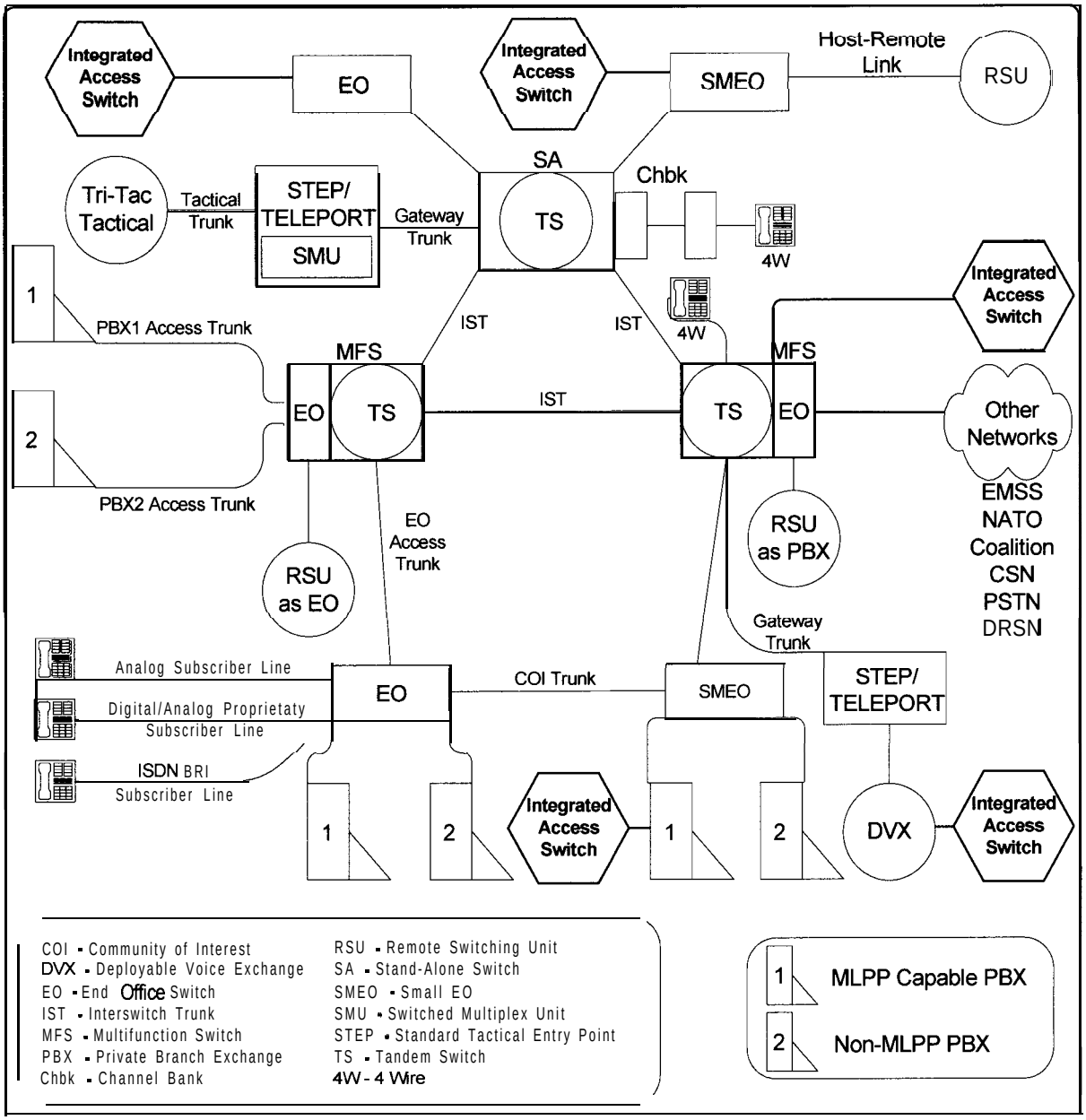

Figure A6.4 - Applications for the Integrated Access Switch

A6.4 Integrated Access Switch Requirements

All Integrated Access Switches are required to meet the following requirements.

A6.4.1 Interfaces

DSN interfaces:

[Required] Tl ISDN PRI NI 1/2

a. The IAS shall conform to GSCR Sections 2.3.4, and 5.7 inclusive and shall provide the ISDN PRI capabilities shown in Table A6.1.

b. The IAS shall conform to Table 14-4 of Telcordia Technologies, SR-2275, *"Telcordia Notes on the Networks"*, Issue 4, October 2000, which provides the specific requirements for features and capabilities listed in Table A6.1.

c. The IAS shall support line timing mode in accordance with GSCR Section 11.1.1.2.

Table A6.1 - T1 PRI Access, Call Control, and Signaling

Feature or Capability	Requirement
PRI Layer 1	Required
PRI Layer 2 (Circuit)	Required
PRI Call Control and Signaling	
Basic Call Control for Circuit-Mode Calls	Required
Multiple DS1 Facilities Controlled by a Single D-Channel	Conditional
D-Channel Backup	Conditional
Access to Selected Primary Rate Services on a Per-Call Basis	Conditional
PRI Interworking with SS7	Conditional
Uniform Cause Values and Location Indicators - Subset	Conditional
RESTART Procedures	
Support of Single Interface Initiated by the CPE	Conditional
Support of Restart of All DS 1 's Controlled by a D-channel, Initiated by the SPCS	Conditional
Support of Restart Collision Procedures	Conditional
SWF-DS1	Required
PRI Packet-Mode Call Control	Conditional

[Conditional] El ISDN PRI

a. If provided the IAS shall conform to GSCR Section 5.7 inclusive.

TE Interfaces:

[Required] One of the following interfaces is required.

a. **[Conditional]** T1 ISDN PRI NI 1/2

1) The IAS shall conform to GSCR Sections 2.3.4, and 5.7 inclusive and provide the ISDN PRI capabilities shown in Table A6.2.

2) The IAS shall conform to Table 14-4 of Telcordia Technologies, SR-2275, ***"Telcordia Notes on the Networks"***, Issue 4, October 2000, which provides the specific requirements for features and capabilities listed in Table A6.2.

Table A6.2 - T1 PRI Access, Call Control, and Signaling

Feature or Capability	Requirement
PRI Layer 1	Required
PRI Layer 2 (Circuit)	Required
PRI Call Control and Signaling	
Basic Call Control for Circuit-Mode Calls	Required
Multiple DS1 Facilities Controlled by a Single D-Channel	Conditional
D-Channel Backup	Conditional
Access to Selected Primary Rate Services on a Per-Call Basis	Conditional
PRI Interworking with SS7	Conditional
Uniform Cause Values and Location Indicators - Subset	Conditional
RESTART Procedures	
Support of Single Interface Initiated by the CPE	Conditional
Support of Restart of All DS 1 's Controlled by a D-channel, Initiated by the SPCS	Conditional
Support of Restart Collision Procedures	Conditional
SWF-DS1	Required
PRI Packet-Mode Call Control	Conditional

b. **[Conditional]** El ISDN PRI NI 1/2.

1) The IAS shall conform to GSCR Section 5.7 inclusive.

c. [Conditional] ISDN BRI NI 1/2

1) The IAS shall conform to the requirements in GSCR Section 2.3.3 and Section 10 inclusive, with the exception that the IAS may include either the S/T or U interface, and provide the ISDN BRI capabilities shown in Table A6.3.

2) The IAS shall conform to Tables 14-1 through 14-3 of Telcordia Technologies, SR-***2275, "Telcordia Notes on the Networks"***, Issue 4, October 2000, which provides the specific requirements for features and capabilities listed in Table A6.3.

Table A6.3 - BRI Access, Call Control, and Signaling

Feature or Capability	Requirement
ISDN BRI Layer 1	Required
4: 1 TDM Method for ISDN Basic Access	Conditional
ISDN BRI Layer 2	Required

Feature or Capability	Requirement
BRI Circuit-Mode Call Control	Required
Basic Call Control	Required
Uniform Cause Values and Location Identifiers – Subset	Conditional
BRI Terminal Initialization	Required
Service Profile Identifier	Required
Parameter Downloading	Conditional
Parameter Downloading – Version 2 (Extensions for Virtual Key Service)	Conditional
Download Additional Data for Softkey Operations Parameter Downloading: – Version 2.1	Conditional
Automatic SPID	Conditional
Default Services for Terminals	Conditional
BRI Interworking with SS7	Conditional
ISDN BRI Packet-Mode Call Control	Conditional
User Originated, On-Demand B- Channel Packet	Conditional
Conditional Notification	Conditional

A6.4.2 Security

[Required] The IAS shall conform to the requirements outlined in Department of Defense Instruction (DODI) 5200.40, 30 December *1997, "Defense Information Technology Security Certification and Accreditation Process (DITSCAP) "* and the DSN Security Technical Implementation Guide (STIG).

A6.4.3 Numbering Plan

[Required] The IAS shall provide the capability to integrate its numbering plan with the 1 0-digit format of the North American Numbering Plan (NANP) and conform to the GSCR Section 4.5.1 inclusive, which defines the DSN World Wide Numbering and Dialing Plan (WWNDP).

[Required] IAS line number assignments shall be within existing geographic DSN WWNDP office codes and shall support the same format that the local PSTN/POTS numbers are assigned (NPA-NXX-XXXX).

[Required] IAS numbering shall conform to ITU-T Recommendation E. 164, *"The International Public Telecommunication Numbering Plan"*. It shall be able to send all digits defined in GSCR Table 4-6. The IAS shall be able to receive dialed digits and manipulate them as necessary to support the above requirement.

A6.4.4 Provisioning

[Conditional] The IAS shall provide software capability to ensure that the number of provisioned of TE interface bearer channels do not exceed the number of provisioned DSN or

commercial interface bearer channels. This is to reduce the possibility of a call destined for a TE to be blocked by the DSN or commercial interfaces not having available bearer channels for this call.

[Required] The IAS shall provide the capability to allocate a specific amount of maximum bandwidth to each of the TE interfaces at the DSO level. Calls originating from the TE interfaces shall be prevented from exceeding this bandwidth.

A6.4.5 Reliability

[Required] The EC reliability and availability shall conform to Section 5 of Telcordia Technologies Generic Requirements GR-5 12-CORE, *"LSSGR: Reliability, Section I2 "*, Issue 2, January 1998 as specified for individual devices. The vendor shall provide a reliability model for the system, showing all calculations and showing also how the overall availability will be met, if requested.

A6.4.6 Loop Back Capability

[Conditional] The IAS shall provide loop back capability on each of the TE interfaces in accordance with ITU-T Recommendation V.54, *"Loop Test Devices For Modems "*.

A6.4.7 Inverse Multiplexer (IMUX) Capability

[Conditional] The IAS IMUX capability shall meet the ITU-T Recommendation H.244, *"Synchronized aggregation of multiple 64 or 56 kbit/s channels "* requirements and shall conform to Federal Telecommunications Recommendation 1080B-2002, August 15, 2002, *"Video Teleconferencing Services "* when connected to TE equipment. Additionally, the IAS IMUX shall provide one or more of the below interfaces:

a. EIA-366-A, *"Interface Between Data Terminal Equipment and Automatic Calling Equipment for Data Communication "*.

b. EIA-449-l) *"General Purpose 37-Position and 9-Position Interface for Data Terminal Equipment and Data Circuit-Terminating Equipment Employing Serial Binary Data Interchange "*.

c. TIA/EIA-530-A, *"High Speed 25-Position Interface for Data Terminal Equipment and Data Circuit-Terminating Equipment, Including Alternative 26-Position Connector"*, Revised 1998.

d. ITU-T Recommendation V.35, *"Data transmission at 48 kilobitsper second using 60-l 08 kHz group band circuits"*.

APPENDIX 7
DOD GENERIC SWITCHING CENTER REQUIREMENTS (GSCR)
08 SEP 2003
Customer Premises Equipment (CPE) Requirements

A7.1 Background

This appendix describes the requirements that must be met by all Customer Premise Equipment (CPE) for them to be certified and used in the Defense Switched Network (DSN).

The requirements contained in this appendix are based on:

a. Policy for DOD voice networks as outlined in the Chairman of Joint Chiefs of Staff Instruction (CJCSI) 6215.01B, *"Policy for Department of Defense Voice Networks"*. CJCSI 6215.01B defines the DSN as being "an interbase, nonsecure or secure C2 telecommunications system that provides end-to-end command use and dedicated telephone service, voice-band data, and dial-up VTC for C2 and non-C2 DOD authorized users in accordance with national security directives." The CJCS instruction further specifies the need for the DSN to offer military unique features (MUFs) such as Multi-Level Precedence and Preemption (MLPP) and military Network Management (NM).

b. *"Department Of Defense Voice Networks Generic Switching Center Requirements (GSCR)"*, 08 Sep 2003.

c. Department Of Defense Instruction (DODI) 8100.3, 16 January 2004, *"Department of Defense (DoD) Voice Networks"*.

A7.2 Purpose

The purpose for developing this Appendix to the Defense Switch Network (DSN) Generic Switching Center Requirements (GSCR) document is to specify the CPE requirements so they can be certified for use in the Defense Switch Network (DSN).

A7.3 Applicability

This appendix applies to all DSN CPEs identified below, procured or leased for installation in the DSN. All services, features and functions (both unique military and standard commercial) identified in this GSCR and associated Appendixes are to be implemented in DSN assets including switches, trunks, lines, and ancillary equipment. This specification also applies to upgrades and new software loads for existing equipment.

The GSCR is the governing specification document that takes precedence over the explicit or implicit requirements of subsidiary or reference documents, standards, and specifications. In the event of conflict, the explicit requirements of the GSCR take precedence over the explicit or implicit requirements of the LATA Switching Systems Generic Requirements (LSSGR), Generic Requirements (GR), and DISAC 370-175-13.

A wide variety of CPE manufactured and sold by many sources can be connected to the line/subscriber and/or carrier/network side of a DSN switching center. Such variety include Industry "ANSI-ETSI STANDARDS" based digital and analog devices and non-STANDARDS based proprietary digital devices. The efficiency of such analog devices/equipment in converting an acoustic signal into an electric signal (and the reverse) is an important consideration in the development of the DSN transmission plan. The efficiency of the analog or digital CPE equipment affects the quality, loudness, noise, and echo performance of the overall connection.

This appendix covers those devices that are connected to a DSN switch via a 2 wire analog, 2 wire digital, or 4 wire digital interface (as illustrated in Figure A7.5) and that such devices are not required to have network management features/functionality. This covers devices such as answering machines, voice mail, automated call distributors, proprietary telephone sets, standards based telephone sets, facsimile machines, voice band modems, ISDN network termination 1 (NT1) devices and terminal adapters (TA), and certain devices that are deemed mandatory for local or host nation telecommunications network compliance (i.e., 911 Emergency Service).

The original interface requirement for a 911 Emergency Service system is typically an analog protocol that requires R2 signaling. Since the basic requirements of the GSCR did not mandate the R2 signaling it is therefore not a DSN requirement for such a system that uses the R2 protocol. The DSN however supports such a system via the ISDN BRI/PRI protocol and this Appendix applies to all 911 Emergency Service system(s) using the ISDN protocol.

The interfaces listed are further described below with the minimum features that are essential for maintaining the DSN quality of service. CPE's that are designed to actively control the interaction of switch supervision are further described to make a distinction between manual and automated CPE supervision control (i.e., FAX, Modems, versus Analog and Digital 2W Subscriber Instruments) to ensure MLPP transparent operation.

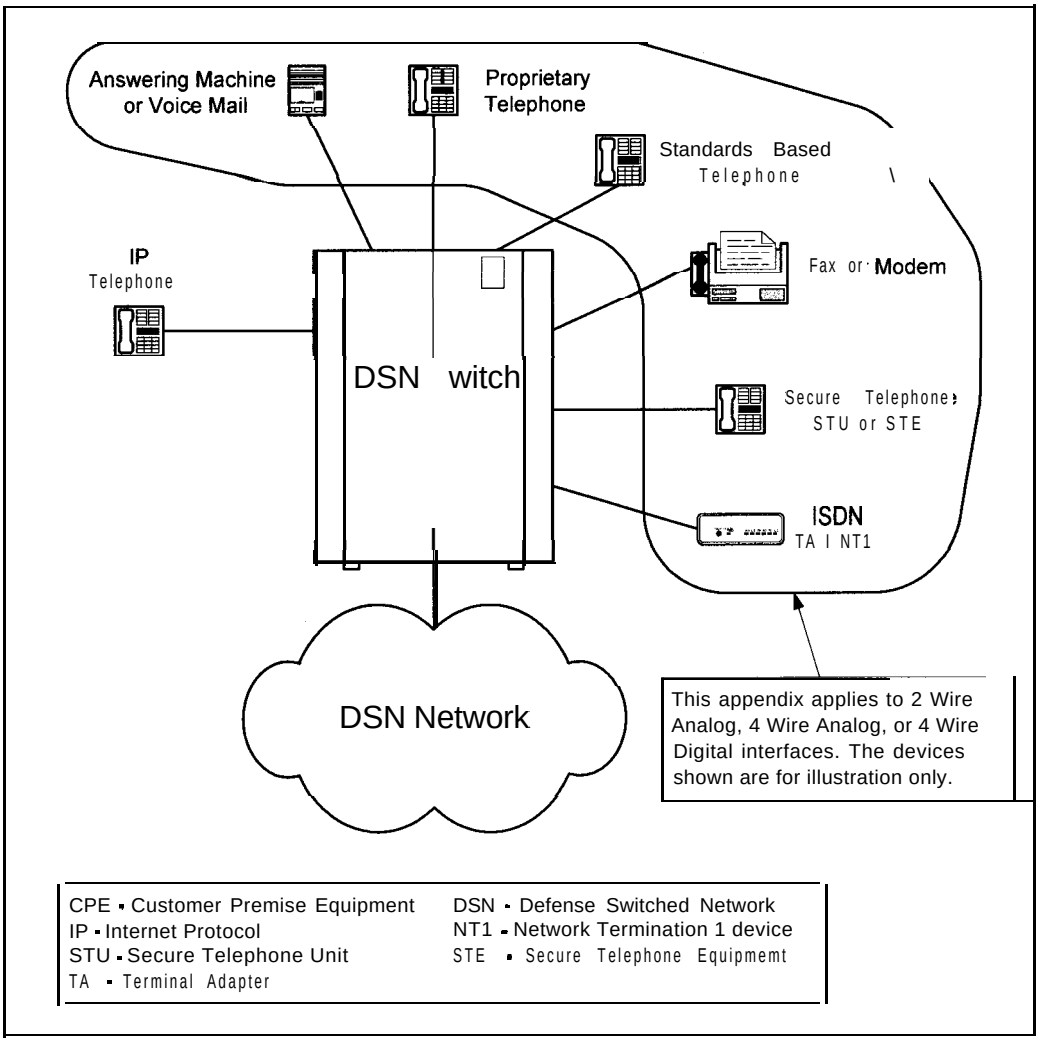

Figure A7.5 - Typical CPE connections to the DSN.

A7.4 Definitions

ISDN Devices: Integrated Services Digital Network (ISDN) specifies a number of reference points that define logical interfaces between functional ISDN devices such as terminals, terminal adapters, network termination devices, and line termination equipment. ISDN specifies a number of reference points that define the interconnect of these devices.

ISDN devices are defined as:

TE1 – Terminals with built-in ISDN connection capability. (Also referred to as TE.)

TE2 – An existing terminal device, designed for existing protocols. It is not capable of directly interoperating with ISDN.

TA – An adaptive device designed to permit TE2s to inter-operate with ISDN.

NT1 – A single (physical) layer device that contains all of the necessary interface elements to communicate with the network. It terminates the local loop and provides the user interface to the network while isolating this user from the operation of the network.

Figure A7.6 illustrates the ISDN specified reference points and the arrangement of terminal equipment. The reference points applicable for DSN CPE are:

U – The reference point for a Basic Rate Interface (BRI) connection between a local loop and a customer premise. The U interface specifies a single pair loop over which a logical four-wire circuit is derived.

S – The reference point between ISDN user terminal equipment (i.e., TE1 or TA) and the network termination equipment (NT1). This is a four-wire interface that supports the BRI 2B+D protocol.

R – The reference point representing a standardized non-ISDN interface such as EIA-232, EIA-422, V.24, V.35, etc. The combination of a TA and TE2 is equivalent to a TE1.

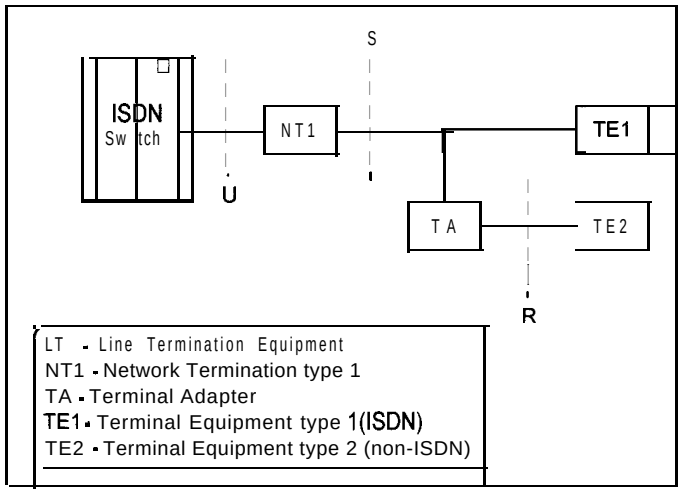

Figure A7.6 - ISDN Reference Points.

Required: These are features and capabilities considered necessary for devices covered by this appendix for DoD mission support based on DoD policies. These features and capabilities require certification prior to introduction into the DSN.

Conditional: These are features and capabilities that are not considered critical for DoD mission support based on DoD policies. It is recognized however, that such features do have utility for some users or for specific operations. If these features and capabilities are provided, the switch shall perform and meet the specifications as identified in this appendix.

A7.5 Requirements

All CPE devices covered by this appendix are required to meet the following requirements..

[Conditional] All CPE devices that support MLPP shall do so in accordance with the requirements as listed in Section 3 of the GSCR and shall not affect the DSN interface features and functions associated with line supervision and control.

[Required] All DSN CPE, as a minimum, must meet the requirements of Part 15 and Part 68 of the FCC Rules and Regulations, and the Administrative Council for Terminal Attachments (ACTA).

[Conditional] Device(s) that support auto-answer shall have a "Auto-Answer" mode settable have the feature to set the auto-answer mode to a "time" more than the equivalency of four (4) "ROUTINE" precedence ring intervals in accordance with GSCR Section 5.5.1. before "answer" supervision is provided.

[Conditional] Devices that are required to supported precedence calls above ROUTINE, shall respond properly to an incoming alerting (ringing) precedence call cadence as described in GSCR Section 5.5.1.

[Conditional] Device(s) that can "out-dial" DTMF and/or "DP" digits (automatic and/or manual) shall comply to the requirements as stated in GSCR Section 5.4.1 and 5.4.2, respectively, for its address digit generating capabilities and shall be capable of outpulsing DTMF digits specified in Telcordia Technologies GR-506-CORE, *"Signaling for Analog Interfaces "*, Issue 1 with Revision 1, June 1996."

[Conditional] Modems and facsimile machines shall be compatible with ITU and Bell standards, as applicable.

[Conditional] Facsimile devices, as a minimum, shall meet the requirements in accordance with the Department of Defense (DoD) Joint Technical Architecture (JTA).

[Conditional] If Configuration Management and/or Fault Management is provided by the CPE device so that it can be managed by the Advanced DSN Integrated Management Support System (ADIMSS) or other management systems, then the management information shall be provided by one or more of the below listed serial or Ethernet interfaces.

a. Serial interfaces shall be in accordance with one of the following standards:

1) ITU-T Recommendation V.35, *"Data transmission at 48 kilobits per second using 60-108 kHz group band circuits"*.

2) TIA-232-F, *"Interface Between Data Terminal Equipment and Data Circuit-Terminating Equipment Employing Serial Binary Data Interchange"*.

3) EIA-449-l) "G*eneral Purpose 3 7-Position and 9-Position Interface for Data Terminal Equipment and Data Circuit-Terminating Equipment Employing Serial Binary Data Interchange"*.

4) TIA-530-A, *"High Speed 25-Position Interface for Data Terminal Equipment and Data Circuit-Terminating Equipment, Including Alternative 26-Position Connector"*.

b. Ethernet interfaces shall be in accordance with IEEE Std 802.3-2002, *"Carrier sense multiple access with collision detection (CSMA/CD) access method and physical layer specifications"*.

[Conditional] As a minimum, the 911 and the E911 (tandem) Emergency Service shall have the capability to "hold" the originating subscriber/caller from releasing the call via the switch supervision interaction for line and trunk control by the "called-party" feature, in accordance with Telcordia Technologies GR-529, *"LSSGR: Public Safety"*.

A7.5.1 2 Wire Analog Instruments / Devices

CPE(s) that connect to the DSN using a 2 wire analog interface (Analog Single Line Instrument/FAX/ Modem/Answering Machine/Voice Mail/Automated Call Distributor) shall meet the following requirements.

[Required] All 2 wire analog devices shall conform to the requirements of TIA/EIA-470-B, *"Telecommunications - Telephone Terminal Equipment - Performance and Compatibility Requirements for Telephone Sets with Loop Signaling (ANSI/TIA/EIA-470-B-97)"*.

A7.5.2 2 Wire Digital Instruments / Devices

CPE(s) that connect to the DSN using a 2 wire digital interface (Digital Single/Multi-Line Proprietary Instrument/FAX/Modem/ISDN BRI Devices including 911 Emergency Service).

[Conditional] CPE that use loop signaling shall conform to the requirements of TIA/EIA-470-B, *"Telecommunications - Telephone Terminal Equipment - Performance and Compatibility Requirements for Telephone Sets with Loop Signaling (ANSI/TIA/EIA-470-B-97)"*.

[Conditional] CPE(s) that connect at the ISDN BRI "U" interface shall conform to ANSI T 1.60 1 - *1999, "ISDN Basic Access Interface for Use on Metallic Loops for Application at the Network Side of NT, Layer I Specification".*

A7.5.3 4 Wire Digital Instruments / Devices

[Conditional] CPE(s) that connect at the ISDN BRI "S" or "T" interface shall conform to ANSI T1.605-1991 (R1999), *"ISDN Basic Access Interface for S and T Reference Points and Layer 1 Specification".*

A7.5.4 ISDN Terminal Adapter

The general function of a TA is to adapt terminals with non-ISDN standard interfaces (such as X- and V-series interfaces) to ISDN standard user-network interfaces. The TA shall adapt to, connect to, and/or be part of a data-type terminal. The TA connects terminal equipment (TE2), such as a computer, fax machine, LAN, telephone set, etc., to one or more B channels and passes along digital signals to the ISDN external line. A terminal adapter needs not be a separate unit but could be contained within the TE or integrated with the NT1 into a single box.

Terminal Adapter(s) shall meet the following requirements.

[Required] The TA shall be able to connect a non-ISDN terminal (TE2) to one or both of the B channels of an ISDN connection and establish a viable ISDN connection with a terminal at the distant end.

[Required] The TA shall meet its necessary requirements regardless if it is implemented as a stand-alone device or as a device integrated with either the TE2 it supports or the NT1 which connects it to the network.

[Required] The TA shall be compatible with National ISDN NI-1/2 as defined by GSCR, Section 2.3.3.

[Conditional] [The TA shall provide loop back capability in accordance with ITU Recommendation V.54, *"Loop Test Devices For Modems".*

[Conditional] The TA shall support inverse multiplexing in accordance with ITU Recommendation H.244, ***"Synchronized Aggregation Of Multiple 64 Or 56 Kbit/S Channels"*** and conform to Federal Telecommunications Recommendation 1080B-2002, August 15, 2002, *"Video Teleconferencing Services"*, when connected to TE2 equipment.

[Required] The TA shall provide one or more of the below interfaces:

a. EIA-366-A, *"Interface Between Data Terminal Equipment and Automatic Calling Equipment for Data Communication ".*

b. EIA-449-1, *"General Purpose 3 7-Position and 9-Position Interface for Data Terminal Equipment and Data Circuit-Terminating Equipment Employing Serial Binary Data Interchange ".*

c. TIA -530-A, *"High Speed 25-Position Interface for Data Terminal Equipment and Data Circuit-Terminating Equipment, Including Alternative 26-Position Connector ",* Revised *1998.*

d. ITU-T Recommendation V.35, *"Data transmission at 48 kilobitsper second using 60-108 kHz group band circuits".*

A7.5.5 Automated Receiving Devices

Automated Receiving Devices (ARD) are a family of automated devices, which are CPE or network elements, that attaches to the receiving end of a telephone call. Typical ARDs will have an automatic call distribution front-end which could be as simple as a queue that handles incoming calls on a first come first serve basis. More complex ARDs can be full function Automatic Call Distributors (ACD) that also include pre-determined scheme and routes calls based on routing criteria and, quite often, database handling instructions. Once in queue, if the caller is not answered in a specified amount of time, and if the caller had not terminate the call, ARD can also terminate the call, or send the call to another location. Usually the ARD invokes a network carrier based "take back and transfer" to the alternative location. Generally, ARDs do not originate calls to the network.

ARDs can have different names. The following are some typical devices included in this family:

- Automatic Call Distributor
- Voice messaging system
- Automatic announcer
- Event Notification System
- Automated Attendant
- Morale Welfare and Recreation (MWR) Call Systems
- Call Center System

ARDs shall meet the following minimum requirements:

[Required] ARDs interfacing to the DSN shall meet at least one of the following interface types:

a. 2 wire interface as specified in Section A7.5.2 above.

b. 4 wire interface as specified in Section A7.5.3 above.

c. PCM-24 as specified in GSCR Section 7.1

d. PCM-30 as specified in GSCR section 7.2

[Required] All ARDs shall be implemented in the DSN to receive only 'ROUTINE' precedence calls. All precedence calls above ROUTINE destined for an ARD shall be diverted by the DSN switching system in accordance with GSCR Section 3.3, Precedence Call Diversion.

A7.6.5 Security

[Required] All CPE(s) shall meet security requirements as outlined in DODI 5200.40, 30 December *1997, "Defense Information Technology Security Certification and Accreditation Process (DITSCAP) "* and the DSN Security Technical Implementation Guide, as applicable.

APPENDIX 8

DOD GENERIC SWITCHING CENTER REQUIREMENTS (GSCR)
08 SEP 03
Video Teleconferencing (VTC) Requirements

A8.1 Background

This appendix describes the requirements that must be met by all Video Teleconferencing (VTC) systems and endpoints for them to be certified and used in the Defense Switched Network (DSN). Where conflicts between this Appendix and the body of this GSCR arise, the requirements in the GSCR body take precedence.

The requirements contained in this appendix are based on:

a. Policy for DoD voice networks as outlined in the Chairman of Joint Chiefs of Staff Instruction (CJCSI) 6215.01B, *Policy for Department of Defense Voice Networks.* CJCSI 62 15 .O 1 B defines the DSN as being "an interbase, nonsecure or secure C2 telecommunications system that provides end-to-end command use and dedicated telephone service, voice-band data, and dial-up VTC for C2 and non-C2 DOD authorized users in accordance with national security directives." The CJCS instruction further specifies the need for the DSN to offer military unique features (MUFs) such as Multi-Level Precedence and Preemption (MLPP) and DSN Network Management (NM).

b. *Department Of Defense Voice Networks Generic Switching Center Requirements (GSCR), 08* Sep 2003.

c. Department of Defense Instruction (DODI) 8100.3, 16 January 2004, Subject: *Department of Defense (D oD) Voice Networks.*

A8.2 Purpose

The purpose of this Appendix to the Defense Switch Network (DSN) Generic Switching Center Requirements (GSCR) document is to specify the video teleconferencing system operational interface requirements to DSN switches necessary to ensure proper MLPP and other MUF feature operations in accordance with the CJCSI 6215.01B directive for DSN services.

VTC systems connected to the DSN shall, as a minimum, comply with Section 1 of this GSCR and with the required capabilities identified in this appendix so that the VTC system has features and capabilities considered necessary for interfacing to a particular DSN serving switch type to support warfighter missions in DoD. These VTC features and capabilities will require JITC certification and DISA-IA accreditation prior to connection to the DSN.

Conditional requirements are features and capabilities that are not considered critical for DoD mission support based on DoD policies. It is however, recognized that such features do have utility for some users or for specific operations. To ensure interoperability and consistency of the

MUF functionalities across all platforms, these features and capabilities are specified with set parameters. If these features and capabilities are provided, the device shall perform and meet the specifications as identified in this GSCR appendix.

A8.3 Applicability

This appendix specification applies to all video teleconferencing systems/endpoints procured or leased for installation in the DSN. DSN assets, services, features and functions (both unique military and standard commercial) shall not be adversely affected by the implementation of such VTC systems/endpoints. DSN assets include switches, trunks, lines, Customer Premises Equipment (CPE), and ancillary equipment. This appendix specification also applies to upgrades and new software loads for existing VTC systems/ endpoints and equipment.

The GSCR is the governing specification document that takes precedence over the explicit or implicit requirements of subsidiary or reference documents, standards, and specifications. In the event of conflict, the explicit requirements of the GSCR take precedence over the explicit or implicit requirements of the LATA Switching Systems Generic Requirements (LSSGR), Generic Requirements (GR), and DISAC 370-175-13.

AS.4 General

The DSN provides an implementation of non-MLPP and MLPP Integrated Services Digital Network (ISDN) that can be used for end-to-end digital VTC systems in secure or non-secure modes at any level of precedence. The DSN uses an intelligent signaling network and a limited set of user-network interfaces. The DSN implementation of ISDN will allow for the integration of voice, data, video, text, and graphics communications. The DSN is capable of two ISDN standard interfaces identified as:

- Basic Rate Interface (BRI)
- Primary Rate Interface (PRI)

Video Teleconferencing systems and endpoints connected to the DSN may incorporate the following:

- Camera, monitor, microphone, and speakers
- CODEC
- Multipoint Control Unit (MCU)
- H.323 to H.320 Gateway
- Cryptographic device / cryptographic device bypass unit
- Or other similar equipment.

H.323 Assured Service has not yet been defined, thus the H.323 interface has no Assured Service capabilities. This interface can only serve DoD, non-DoD, non-governmental, and foreign government users having no missions or communications requirement to ever originate or receive C2 VTC communications under existing military scenarios. These users are provided access to the DSN for the economic or policy benefits of the DoD, when it is not in conflict with

local Public Telephone and Telegraph (PTT) ordinances. Since H.323 does not provide assured services during a crisis or contingency, users access to the DSN will be on a best effort basis. Therefore, C2 VTC users and Special C2 VTC users are not authorized to be served by a H.323 Interface.

These devices may be implemented as individual components or be integrated with one or more other components as a system. The terms VTC, VTC system(s), and VTC endpoint(s) are used synonymously.

VTC systems/endpoints are typically connected to the DSN via an Integrated Access Switch (IAS) (see GSCR Appendix 6 for DSN IAS requirements) or a Terminal Adapter (TA) (see GSCR Appendix 7 for DSN TA requirements). This specification also addresses VTC systems/endpoints that have an integral IAS or TA for connection to the DSN. In addition to the requirements specified in this Appendix, VTC systems/devices that have integral IAS/TA functions shall conform to the stated requirements identified in Appendix 6 and 7, as applicable.

Figure AS. 1 shows typical connections between VTC systems/endpoints and the DSN. Other connection configurations may be possible.

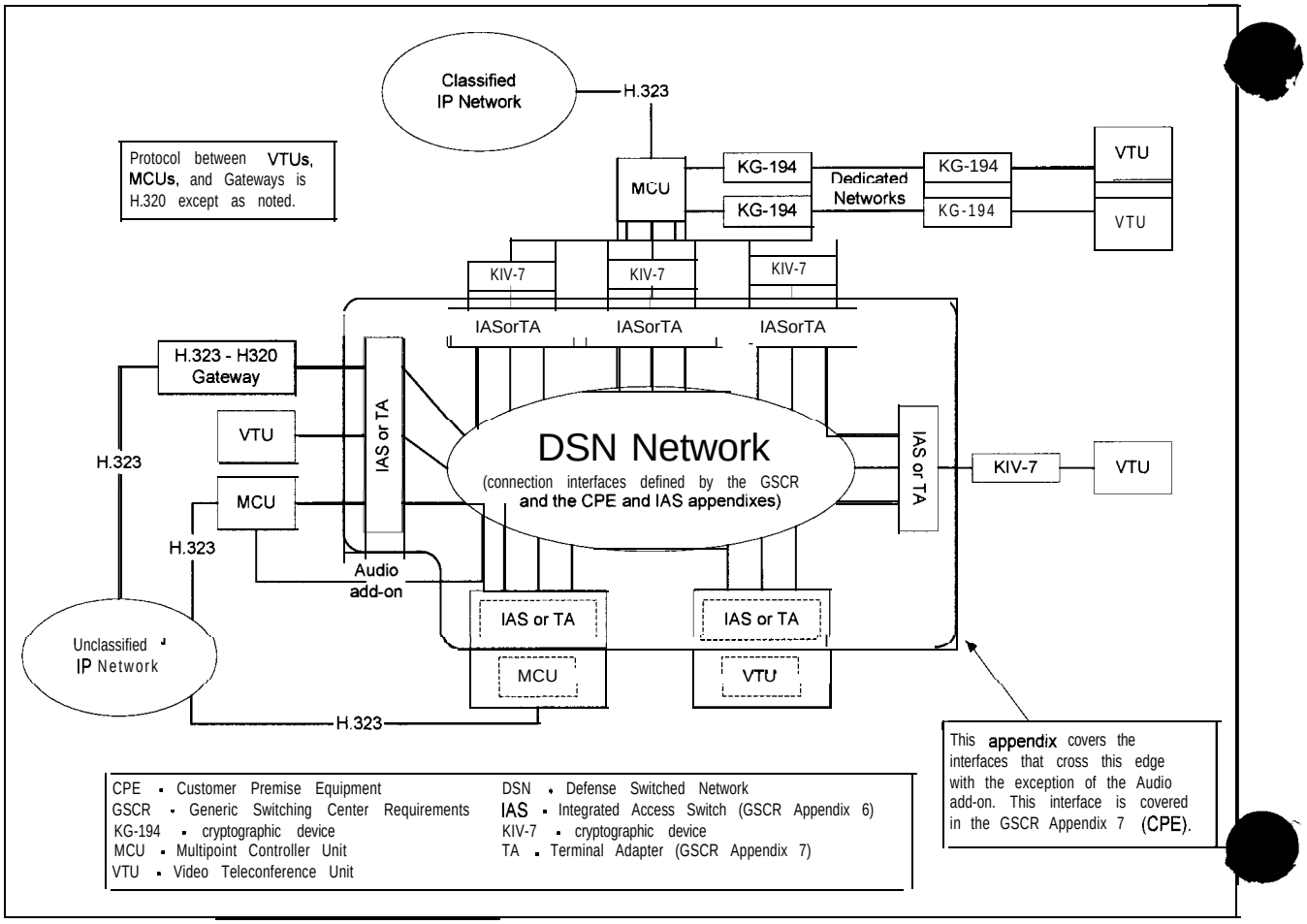

Figure AS.7 Typical VTC System connections to the DSN.

AS.5 Video Teleconferencing: Requirements

This section provides the requirements for VTC systems/endpoints in the DSN. All VTC systems/endpoints, when interfaced to the DSN, are required to meet the below requirements.

[Required] The VTC system/endpoints shall meet the requirements of Federal Telecommunications Recommendation 1 080B-2002, August 15, 2002, *Video* Teleconferencing Services.

[Conditional] VTC features and functions used in conjunction with IP network services shall meet the requirements of H.323 in accordance with FTR 1080B-2002.

[Required] A loss of any conferee on a multipoint videoconference shall not terminate or degrade the DSN service supporting VTC connections of any of the other conferees on the videoconference.

[Required] An Audio add-on interface, implemented independently of an IAS, shall be in accordance with GSCR, and in particular, Appendix 7, Customer Premise Equipment.

[Conditional] A VTC system/endpoint that uses an integrated BRI interface to connect to the DSN shall be in conformance with the requirements associated with a Terminal Adaptor as described in Appendix 7, Customer Premise Equipment.

[Conditional] A VTC system/endpoint that uses an integrated PRI interface to connect to the DSN shall be in conformance with the requirements associated with a Integrated Access Switch as described in Appendix 6, Integrated Access Switch.

[Conditional] A VTC system/endpoint that uses a serial interface(s) to another device, such as a cryptographic device, IAS, or TA, for eventual connection to the DSN, shall be in conformance with the requirements for that serial interface(s) as described in FTR 1080B-2002.

[Required] Physical, electrical and software characteristics of VTU system(s)/endpoint(s) that are used in the DSN network shall not degrade, or impair, the serving DSN switch and its associated network operations.

A8.6 Definitions

Audio Add-On: Allows a participant to join a videoconference via audio (telephone) only.

CODEC: Acronym for Coder/Decoder. In video teleconferencing, an electronic device that converts analog signals, typically video and/or voice, into digital form and compresses them into a fraction of their original size to save frequency bandwidth on a transmission path. The device also multiplexes digital data such as graphic images into the transmitted signal. It also performs the inverse operation; decompressing received signals, demultiplexing them and converting previously digitized analog signals nearly back to their original state.

H.323 to H.320 Gateway: A videoconferencing endpoint that converts between H.323 IP endpoint protocols and services and H.320 endpoint protocols and services for transport of videoconferencing data between IP and serial or ISDN connections.

KIV-19/19A: (National Security Agency (NSA) cryptographic device nomenclature) A Federally-certified cryptographic device used to provide data encryption at data rates from 9.6kb/s up to 13 Mb/s over synchronous serial links on dedicated circuit or dial-up network paths. The KIV-19/19A is interoperable with the KG-194/l 94A.

KG-194/194A: (National Security Agency (NSA) cryptographic device nomenclature) A Federally-certified cryptographic device used to provide data encryption at data rates from 9.6 kb/s up to 13 Mb/s over synchronous serial links, typically on dedicated circuit networks.

KIV-7/KIV-7HS: (National Security Agency (NSA) cryptographic device nomenclature) A Federally-certified cryptographic device used to provide data encryption at data rates up to 2.048 Mb/s over synchronous serial links on dial-up and other non-dedicated networks.

Multipoint Control Unit (MCU): A multi-port VTC endpoint that enables intercommunication of three or more VTC endpoints in a conference call. It can also be used with two VTC endpoints, e.g., while beginning or ending a multipoint conference. The MCU may perform mixing or switching of audio, video and data.

Video Teleconferencing (VTC): Two-way electronic form of communications that permits two or more people in different locations to engage in face-to-face audio and visual communication. Meetings, seminars, and conferences are conducted as if all of the participants are in the same room.

Video Teleconferencing Unit (VTU): VTC endpoint equipment that performs the following functions: coding/decoding of audio and video; multiplexing of video, audio, data, and control signals; system control; and end-to-end signaling. It may include I/O functions, embedded cryptographic functions, network interface functions, end-to-network signaling, and connections to networks.

A8.7 Security

[Required] All VTC system(s) shall meet security requirements as outlined in DODI 5200.40, 30 December *1997, "Defense Information Technology Security Certification and Accreditation Process (DITSCAP) "* and the DSN Security Technical Implementation Guide, as applicable.

APPENDIX 9

DOD GENERIC SWITCHING CENTER REQUIREMENTS (GSCR)
08 SEP 2003
DSN Network Element (NE) Generic Requirements

A9.1 Background

This appendix describes the requirements that must be met by Defense Switched Network (DSN) Network Element (NE) devices.

The requirements contained in this appendix are based on:

a. Policy for DoD voice networks as outlined in the Chairman of Joint Chiefs of Staff Instruction (CJCSI) 6215.01B, *Policy for Department of Defense* Voice Networks. CJCSI 6215.01B defines the DSN as being "an interbase, nonsecure or secure C2 telecommunications system that provides end-to-end command use and dedicated telephone service, voice-band data, and dial-up VTC for C2 and non-C2 DOD authorized users in accordance with national security directives." The CJCS instruction further specifies the need for the DSN to offer military unique features (MUFs) such as Multi-Level Precedence and Preemption (MLPP) and military Network Management (NM).

b. *Department Of Defense Voice Networks Generic Switching Center Requirements (GSCR),* 08 Sep 2003.

c. Department of Defense Instruction (DODI) 8 100.3, 16 January *2004, Department of Defense (DoD) Voice Networks.*

A9.2 Purpose

The purpose for developing this Appendix to the Defense Switch Network (DSN) Generic Switching Center Requirements (GSCR) document is to specify the NE requirements so they can be certified for use in the Defense Switch Network (DSN).

A9.3 Applicability

This specification applies to all Network Elements procured or leased for installation in the DSN. All services, features, and functions (both unique military and standard commercial) identified in this Appendix and the body of this GSCR are to be implemented in DSN assets including switches, trunks, and ancillary equipment. This specification also applies to upgrades and new software loads for existing equipment. This appendix is not applicable to those network elements that are covered explicitly in the GSCR or by other appendixes.

The GSCR is the governing specification document that takes precedence over the explicit or implicit requirements of subsidiary or reference documents, standards, and specifications. In the event of conflict, the explicit requirements of this GSCR take precedence over the explicit or implicit

requirements of the Local Access Transport Area (LATA) Switching Systems Generic Requirements (LSSGR), Generic Requirements (GR), and DISAC 370- 175- 13.

A9.4 Definitions

Network Element: A Network Element is any trunk side component of a network that directly handles network traffic and thus is potentially capable of exercising control over the information flowing through it. Network elements include multiplexers, routers, CSU/DSU's, compression devices, and/or any network device that could have an effect on the performance of the associated network traffic. The network diagram Figure A9.8 shows the typical network element as a stand-alone device or integrated into the transmission interfaces of switches or other network devices.

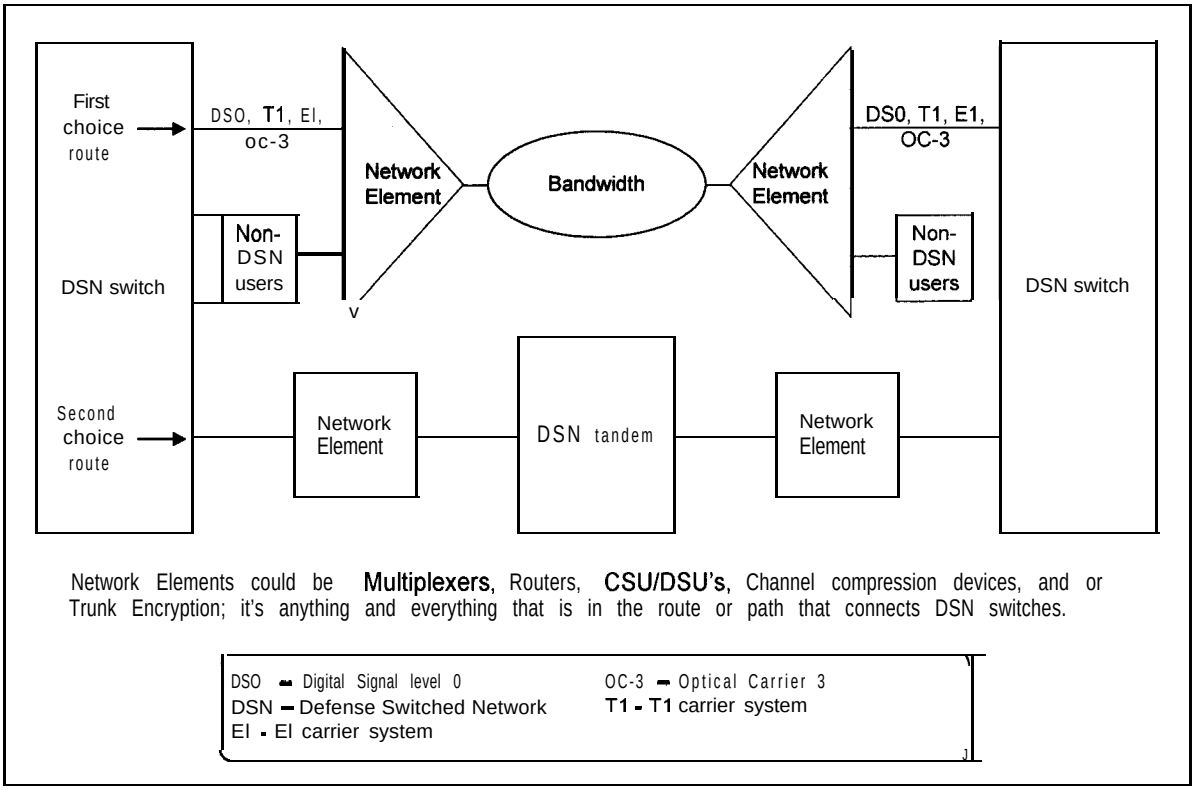

Figure A9.8 Network Element Diagram

Required: These are features and capabilities considered necessary for devices covered by this appendix for DoD mission support based on DoD policies. These features and capabilities require certification prior to introduction into the DSN.

Conditional: These are features and capabilities that are not considered critical for DoD mission support based on DoD policies. It is recognized however, that such features do have utility for some users or for specific operations. If these features and capabilities are provided, the switch shall perform and meet the specifications as identified in this appendix.

A9.5 Requirements

As a minimum, compliance to Section 1 of this GSCR is required to include the following requirements that are features and capabilities considered necessary for a particular switch type to support warfighter missions in DoD. The definitions and policies in Section 1 of this GSCR are applicable to this appendix. These features and capabilities will require certification prior to introduction into the DSN.

Beyond compliance to the body and approved appendixes of the GSCR, all network elements are to be compliant with the following requirements and conditions.

A9.5.1 General

All network trunk elements shall meet the following requirements and conditions.

[Required] The network element shall be able to support that 95% of voice traffic has a Mean Opinion Score (MOS) of at least 4.0.

[Required] The introduction of network elements shall not cause the end-to-end digital bit error rate requirement of less than 1 error in $1x10^9$ (averaged over a nine-hour period) to be exceeded.

[Required] The network element shall not degrade secure transmission of end devices as described in CJCSI 6215.01B.

[Required] The network element shall support a minimum modem transmission speed of 9.6 kbps across the associated network element(s).

[Required] The network element shall support a minimum facsimile transmission speed of 9. 6 kbps across the associated network element(s).

[Required] The network element shall transport all call control signals transparently on an end-to-end basis.

[Required] The network element shall assure that congestion between network elements does not impact DSN calls in progress or subsequent calls. Call congestion handling shall be met in one or more of the following ways:

- A dynamic load control signal (e.g., contact closure) shall be provided to the DSN switch in accordance with GSCR.
- A software capability in limiting the provisioning the input and/or output interfaces such that makes congestion impossible even under the worst congestion scenario.
- Congestion is not possible in the network element by nature of its functioning (e.g. a TDM multiplexer or transcoder).

[Conditional] The network element may include voice compression and if so must support at least one of the following standards:

- International Telecommunications Union ITU-T Recommendation G.726, *32 kbps Adaptive Differential Pulse Code Modulation (ADPCM).*
- International Telecommunications Union ITU-T Recommendation G.728, *16 kbps Low-Delay Code Excited Linear Prediction (LD-CELP).*
- International Telecommunications Union ITU-T Recommendation *G.729, 8 kbps Conjugate-Structure Algebraic-Code-Excited Linear-Prediction (CS-ACELP).*

A9.5.1.1 Analog

[Conditional] The network element may include analog 2-wire or 4-wire trunk interfaces and if so shall be in accordance with GSCR Section 7.4.

A9.5.1.2 Serial

[Conditional] The network element may include serial interface connections and if so shall be in accordance with one of the following standards:

- ITU-T Recommendation V.35, *Data transmission at 48 kilobitsper second using 60-l 08 kHz group band circuits.*

- TIA-232-F, *Interface Between Data Terminal Equipment and Data Circuit-Terminating Equipment Employing Serial Binary Data Interchange.*

- EIA-449-1, *General Purpose 37-Position and 9-Position Interface for Data Terminal Equipment and Data Circuit-Terminating Equipment Employing Serial Binary Data Interchange.*

- TIA-530-A, *High Speed 25-Position Interface for Data Terminal Equipment and Data Circuit-Terminating Equipment, Including Alternative 26-Position Connector.*

A9.5.1.3 BRI ISDN

[Conditional] If a ISDN Basic Rate Interface (BRI) interface is provided, then it shall meet the requirements and conditions in accordance with GSCR Section 2.3.3.

A9.5.1.4 DS1 Interface Requirements

[Conditional] If a Tl interface is provided, then it shall meet the requirements and conditions in accordance with GSCR Section 7.1.

A9.5.1.5 El Interface Requirements

[Conditional] If an El interface is provided, then it shall meet the requirements and conditions in accordance with GSCR 7.2.

A9.5.1.6 DS3 Interface Requirements

[Conditional] If a DS3 interface is provided, then it shall meet the following requirements and conditions.

A9.5.1.6.1 Framing

[Required] Frame structure shall include Ml 3 framing in accordance with ANSI T1.107-2002, *Digital Hierarchy - Formats Specifications.*

[Conditional] Frame structure may include C-bit parity application in accordance with ANSI T1.107-2002, *Digital Hierarchy - Formats Specifications.*

A9.5.1.6.2 Line Coding

[Required] The line coding shall be bipolar 3 zero substitution (B3ZS) in accordance with ANSI T1.102-1993, *Digital Hierarchy - Electrical Interfaces.*

A9.5.1.7 Timing

[Required] The network element shall be able to derive timing signal from an internal source, an incoming digital signal, or an external source in accordance with GSCR Section 11.1.

A9.5.1.8 OC-3 Interface Requirements

[Conditional] If an OC-3 interface is provided, then it shall be in accordance with GSCR Appendix 5, *DSN Switch SONET Digital Trunk Interface.*

A9.5.2 Device Management

A9.5.2.1 Management Options

[Required] Network element devices are to be managed by at least one of the following:

[Conditional] Device may be managed locally by a front or back panel and/or external console control capability shall be provided for local management.

[Conditional] Network elements devices in the DSN may be monitored and managed by the Advanced DSN Integrated Management Support System (ADMISS) as described in the GSCR Section 9. The network element may be able to be centrally monitored and managed as per Sections 9.3 and 9.4 of the GSCR.

A9.5.2.2 Fault Management

[Conditional] Network elements may be capable of performing a self-test diagnostic function on non-active and active channels on a noninterference basis and report any failures to the assigned NM system.

A9.5.2.3 Loop Back Capability

[Conditional] The network element shall provide loop back capability on each of the trunk side interfaces in accordance with ITU-T Recommendation V.54, *"Loop Test Devices For Modems "*.

A9.5.3 Operational Configuration Restoral

[Required] Loss of power should not remove configuration settings. Unit should be restored to the last customer configured state prior to the power loss, without intervention when power is restored.

A9.6 Security

[Required] The network element shall conform to the requirements outlined in Department of Defense Instruction (DODI) 5200.40, 30 December *1997, "Defense Information Technology Security Certification and Accreditation Process (DITSCAP) "* and the DSN Security Technical Implementation Guide (STIG).