**DEFENSE INFORMATION SYSTEMS AGENCY**
**JOINT INTEROPERABILITY TEST COMMAND**
**2001 BRAINARD ROAD**
**FORT HUACHUCA, ARIZONA 85613-7051**

IN REPLY REFER TO: Networks, Transmission and Integration Division (JTE)

**23 Oct 03**

MEMORANDUM FOR DISTRIBUTION

SUBJECT: Joint Interoperability Test Certification of Tekelec Eagle Signal Transfer Point (STP) with Software Release 28.0.1-41.53.0

References:

(a) DOD Directive 4630.5, "Interoperability and Supportability of Information Technology (IT) and National Security Systems (NSS)," January 11, 2002

(b) CJCSI 6212.01B, "Interoperability and Supportability of National Security Systems, and Information Technology Systems," May 8, 2000

1. References (a) and (b) establish the Defense Information Systems Agency, Joint Interoperability Test Command (JITC), as the responsible organization for interoperability test certification. Additional references are provided in enclosure 1.

2. The Tekelec Eagle Signal Transfer Point (STP) with Software Release 28.0.1-41.53.0 meets the interoperability requirements for deployment in the Defense Switched Network (DSN) and is certified for joint use. This certification expires upon changes that affect interoperability, but no later than three years from the date of this memorandum.

3. This certification is based on testing conducted at the JITC's Network Engineering and Integration Lab, Fort Huachuca, Arizona. The Certification Testing Summary in enclosure 2 provides more details about the test, documents the test results, and describes the test network. Users should verify interoperability before deploying the Tekelec STPs in an operational environment that varies significantly from the test environment.

4. Interoperability certification testing of the Tekelec STP consisted of two areas: the STP's conformance to Signaling System 7 (SS7) standards and the STP's ability to support required interfaces with associated Exchange Requirements (ERs) specified in reference (c). Testing was conducted using test procedures in reference (d). The overall system interoperability performance was derived from test procedures listed in reference (e). Table 1 lists the SS7 conformance requirements status and table 2 lists the interface and ER interoperability status.

**Table 1. Tekelec Eagle STP Conformance Requirements Status**

| Conformance Requirement | Reference | Critical | Status |
|---|---|---|---|
| SS7 Network Structure | GSCR Para 6.5.1 | Yes | Met |
| Signaling Link Characteristics | GSCR Para 6.5.2 | Yes | Met |
| Signaling Message Handling, Formats, and Codes | GSCR Paras 6.5.3-5, 6.5.10-11 | Yes | Met |
| Signaling Network Management | GSCR Para 6.5.4 | Yes | Met |
| Error Detection and Recovery | GSCR Para 6.5.2.1 | Yes | Met |
| Signaling Link Congestion | GSCR Para 6.5.4.2 | No | Not tested |

**LEGEND:**
GSCR - Generic Switching Center Requirements
SS7 - Signaling System 7

**Table 2. Eagle STP Interface & Exchange Requirements Status**

| Interface | Exchange Requirement | Critical | Status | Remarks |
|---|---|---|---|---|
| V.35 | SS7 A, B & C-Links IAW GSCR Para 6.5 | No[1] | Certified | All critical ERs met |
| OCU-DP | SS7 A, B & C-Links IAW GSCR Para 6.5 | No[1] | Certified | All critical ERs met |
| DS0A | SS7 A, B & C-Links IAW GSCR Para 6.5 | No[1] | Not Tested | |
| DS1 | SS7 A, B & C-Links IAW GSCR Para 6.5 | No[1] | Not Tested | |

**LEGEND:**
A-Link - Access Link (SS7)
B-Link - Bridge Link (SS7)
C-Link - Cross Link (SS7)
DS0 - Digital Signal Level Zero: One 64 kbps channel
DS0A - A process where a sub-rate signal is repeated 20, 10, or 5 times to make a 64 kbps DS0 channel
DS1 - Digital Signal Level One: 1.544 Mbps North America Transmission
ER - Exchange Requirement
GSCR - Generic Switching Center Requirements
IAW - In Accordance With
ITU - International Telecommunication Union
kbps - kilobits per second
Mbps - Megabits per second
OCU-DP - Office Channel Unit-Data Port
SS7 - Signaling System 7
STP - Signal Transfer Point
V.35 - ITU Standard for synchronous data circuits

**Note:**
1 Per the GSCR, only one of the four STP interfaces is required for certification (V.35, DS0A, DS1, or OCU-DP).

5. The Tekelec STP meets all critical conformance requirements. Conformance to signaling link congestion requirements was not tested because the traffic loading resources currently available at the JITC were unable to initiate enough call attempts to overload a signaling link or exceed congestion onset thresholds. This limitation will have no operational impact in Defense Information Systems Network (DISN)-Europe or DISN-Pacific because the Tekelec Eagle STPs are successfully operating in large commercial SS7 networks with very high volumes of signaling traffic.

6. Section 6 of reference (d) requires that STPs provide at least one of the following interface types: V.35, Office Channel Unit-Data Port (OCU-DP), Digital Signal Level One (DS1) or Digital Signal Level Zero A (DS0A). The Tekelec Eagle STP is capable of supporting V.35, DS0A, OCU-DP, and DS1 interfaces. The V.35 and OCU-DP interfaces are planned for use in the DSN. The DS0A and DS1 interfaces were not tested and are therefore not covered by this certification.

JITC Memo, Networks, Transmission and Integration Division (JTE), Joint Interoperability Test Certification of Tekelec Eagle Signal Transfer Point (STP) with Software Release 28.0.1-41.53.0.

7. JITC distributes interoperability information via the JITC Electronic Report Distribution (ERD) system -- ERD uses unclassified (NIPRNET) e-mail. More comprehensive interoperability status information is available via the JITC System Tracking Program (STP). The STP is accessible by .mil/gov users on the NIPRNET at https://stp.fhu.disa.mil/. Test reports, lessons learned, and related testing documents and references are on the JITC Joint Interoperability Tool (JIT) at http://jit.fhu.disa.mil (NIPRNET), or http://199.208.204.125/ (SIPRNET). Information related to DSN testing is on the Telecom Switched Services Interoperability (TSSI) website at: http://jitc.fhu.disa.mil/tssi.

8. The JITC test point of contact is LCDR Michael Wojcik, DSN 879-6787 or commercial (520) 538-6787. The e-mail address is wojcikm@fhu.disa.mil.

FOR THE COMMANDER:

2 Enclosures:
1 Additional References
2 Certification Testing Summary

LESLIE F. CLAUDIO
Chief
Networks, Transmission and Integration Division

Distribution:
Joint Staff J6I, Room-1E833, Pentagon, Washington, DC 20318-6000
Joint Staff J6E, Room-1E834, Pentagon, Washington, DC 20318-6000
Joint Interoperability Test Command, Washington Operations Division, NSWC, ATTN: JTCA-IPTP, Building 900, 101 Strauss Avenue, Indian Head, MD 20640-5035
Defense Information Systems Agency, Interoperability Directorate, Technical Interoperability Assessment Branch, ATTN: Code IN11, 5600 Columbia Pike, Suite 240, Falls Church, VA 22041
Office of Chief of Naval Operations (N612T2), 2000 Navy Pentagon, Washington, DC 20350
Deputy Chief of Staff for Communications and Information, AF/XI, 1250 Air Force Pentagon, Washington, DC 20330-1250
Department of the Army, Office of the Secretary of the Army, CIO/G6, Office Symbol SAIS-IOE-A, 107 Army Pentagon DISC4, Washington, DC 20310
Commander, MARCORSYSCOM, Code SE&I, Suite 315, 2033 Barnett Avenue, Quantico, VA 22134-5010
JS-J38, JCS, Pentagon, Washington, DC 20318
Defense Intelligence Agency/DS-CIO, Building 6000, Bolling AFB, Washington, DC 20340-3342
DOT&E, Strategic and C3I Systems, 1700 Defense Pentagon, Washington, DC 20301-1700
United States Coast Guard, COMDT/G-SCE (C4), 2100 2nd Street SW, Washington, DC 20593
Office of Assistant Secretary of Defense, C3I (C4ISR & Space Programs)/C3 Directorate, Crystal Mall 3, 7th Floor, Suite 7035, 1931 Jefferson Davis Highway, Arlington, VA 22202
Deputy Director for I/O Testing, Office of Under Secretary of Defense, AT&L Interoperability, Room 3E144, Pentagon, Washington, DC 20301

JITC Memo, Networks, Transmission and Integration Division (JTE), Joint Interoperability Test Certification of Tekelec Eagle Signal Transfer Point (STP) with Software Release 28.0.1-41.53.0.

United States Joint Forces Command, J6I, C4 Plans and Policy, 1562 Mitscher Ave, Norfolk, VA 23551-2488

Commander, Defense Information Systems Agency (DISA), ATTN: NS53 (Mr. Osman), Room 5w23, 5275 Leesburg Pike (RTE 7) Falls Church, VA 22041

## Additional References

(c) Defense Information Systems Agency (DISA), Joint Interoperability and Engineering Organization (JIEO), Technical Report 8249, “Defense Information Systems Network (DISN) Circuit Switched Subsystem, Defense Switched Network (DSN) Generic Switching Center Requirements (GSCR),” March 1997

(d) Joint Interoperability Test Command, “Signaling System 7 Signal Transfer Point Test Plan,” July 2001

(e) Joint Interoperability Test Command, “Defense Switched Network Generic Switch Test Plan (GSTP),” 17 June 1999

## CERTIFICATION TESTING SUMMARY

**1. SYSTEM TITLE.** Tekelec Eagle Signal Transfer Point (STP) with Software Release 28.0.1-41.53.0.

**2. PROPONENT.** Defense Information Systems Agency.

**3. PROGRAM MANAGER.** Mr. Howard Osman, ATTN NS53, Room 5w23, 5275 Leesburg Pike (RTE 7), Falls Church, VA 22041, e-mail: Osmanh@ncr.disa.mil.

**4. TESTERS.** Joint Interoperability Test Command (JITC), Fort Huachuca, AZ.

**5. SYSTEM UNDER TEST DESCRIPTION.** STPs are deployed in the Defense Information System Network's (DISN) Defense Switched Network (DSN) to route signaling messages between Service Switching Points (SSPs). The Tekelec Eagle STP is a standalone STP capable of routing call setup, call control, network management, user-to-network, and user-to-user signaling messages throughout Signaling System 7 (SS7) networks. The STPs also support a broad range of intelligent network services such as Local Number Portability and Calling Name Delivery.

**6. OPERATIONAL ARCHITECTURE.** The Tekelec Eagle STP was tested at the JITC Network Engineering and Integration Lab (NEIL) in a manner and configuration similar to that of the DSN SS7 architecture. Tekelec Eagle STPs are currently deployed in Japan, Korea, Hawaii, and Alaska.

**7. REQUIRED SYSTEM INTERFACES.** Testing was carried out in accordance with Generic Switching Center Requirements (GSCR), dated March 1997. Table 1 lists the SS7 conformance requirements status, and table 2 lists the interoperability status for each interface along with associated Exchange Requirements. The GSCR requires that STPs support at least one of the following data link interfaces: V.35, Office Channel Unit-Data Port (OCU-DP), Digital Signal Level One (DS1), or Digital Signal Level Zero A (DS0A). The Tekelec Eagle supports all four interfaces; however, only the V.35 and OCU-DP interfaces were tested.

## Table 1. Eagle STP Conformance Requirements Status

| Conformance Requirement | Reference | Critical | Status |
|---|---|---|---|
| SS7 Network Structure | GSCR Para 6.5.1 | Yes | Passed |
| Signaling Link Characteristics | GSCR Para 6.5.2 | Yes | Passed |
| Signaling Message Handling, Formats, and Codes | GSCR Paras 6.5.3-5, 6.5.10-11 | Yes | Passed |
| Signaling Network Management | GSCR Para 6.5.4 | Yes | Passed |
| Error Detection and Recovery | GSCR Para 6.5.2.1 | Yes | Passed |
| Signaling Link Congestion | GSCR Para 6.5.4.2 | No | Not tested |

**LEGEND:**

GSCR - Generic Switching Center Requirements
SS7 - Signaling System 7
STP - Signal Transfer Point

## Table 2. Eagle STP Interface & Exchange Requirement Status

| Interface | Exchange Requirement | Critical | Status |
|---|---|---|---|
| V.35 | SS7 A, B & C-Links IAW GSCR Para 6.5 | No[1] | Certified |
| OCU-DP | SS7 A, B & C-Links IAW GSCR Para 6.5 | No[1] | Certified |
| DS0A | SS7 A, B & C-Links IAW GSCR Para 6.5 | No[1] | Not tested |
| DS1 | SS7 A, B & C-Links IAW GSCR Para 6.5 | No[1] | Not Tested |

**LEGEND:**

A-Link - Access Link (SS7)
B-Link - Bridge Link (SS7)
BBSTP - Broadband STP
C-Link - Cross Link (SS7)
DS0 - Digital Signal Level Zero: One 64 kbps channel
DS0A - A process where a sub-rate signal is repeated 20, 10, or 5 times to make a 64 kbps DS0 channel
DS1 - Digital Signal Level One: 1.544 Mbps North America Transmission
GSCR - Generic Switching Center Requirements
IAW - In Accordance With
ITU - International Telecommunication Union
kbps - kilobits per second
Mbps - Megabits per second
OCU-DP - Office Channel Unit-Data Port
SS7 - Signaling System 7
STP - Signal Transfer Point
V.35 - ITU standard for synchronous data circuits

**Note:**
1 Per the GSCR, only one of the four STP interfaces is required for certification (V.35, DS0A, DS1, or OCU-DP).

**8. TEST NETWORK DESCRIPTION.** The test network configuration depicted in figure 1 accurately emulates the DISN SS7 operational environment. The Tekelec Eagle STPs were configured as mated pairs and connected to the Nortel Meridian Switching Load (MSL)-100, Siemens Elektronisches Wahl-System Digital (EWSD), and Lucent Electronic Switching System Number 5 (5ESS) SSPs via Premisys IMACS/800 and NET Promina 400 channel banks. The Premisys IMACS/800 channel bank was used to convert the OCU-DP links provided by Tekelec Eagle STPs to DS1. The Tekelec Eagle STP signaling links were also configured and tested using the V.35 interface with the NET Promina 400 as shown in figure 1.

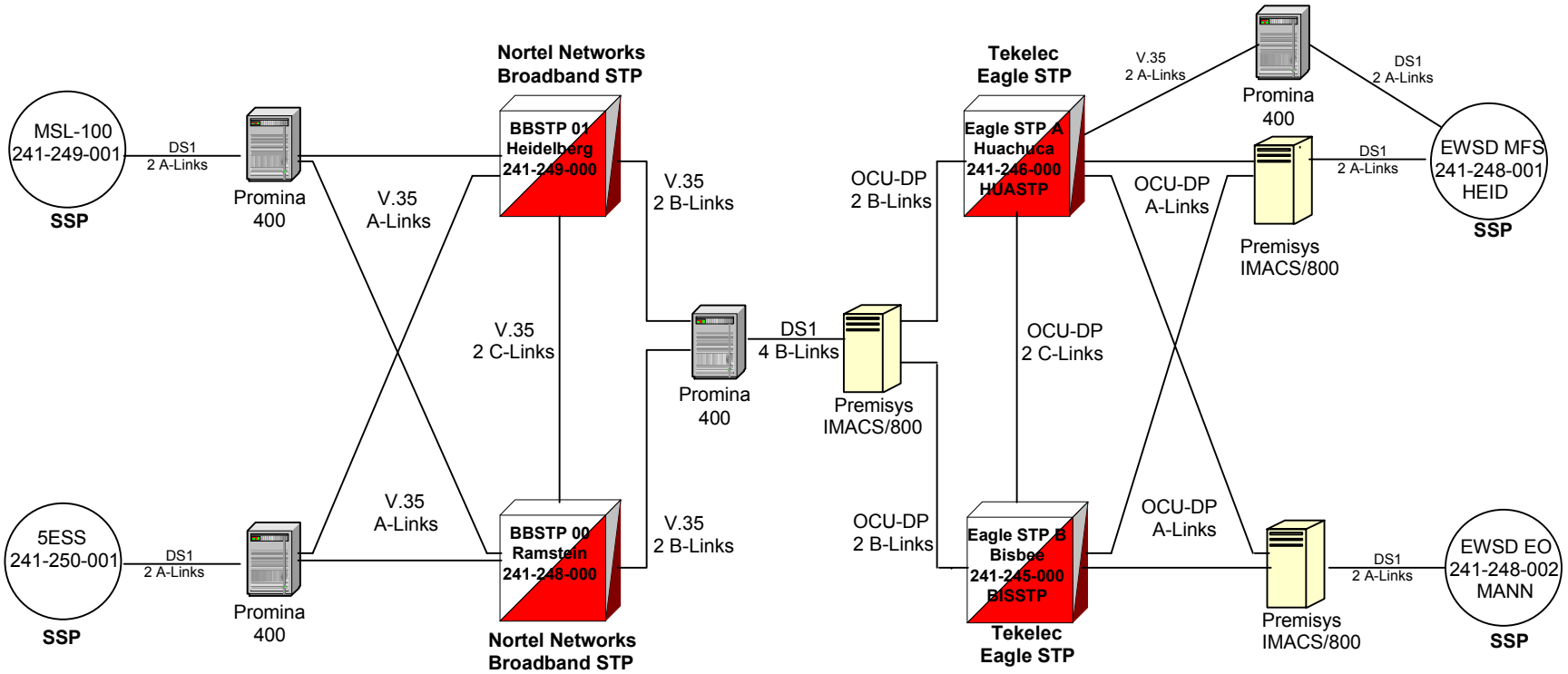


**LEGEND:**

| | |
|---|---|
| 5ESS | - Electronic Switching System (No. 5) (Lucent Switch) |
| A-Link | - Access Link (SS7) |
| B-Link | - Bridge Link (SS7) |
| BBSTP | - Broadband STP |
| C-Link | - Cross Link (SS7) |
| DS1 | - Digital Signal Level 1 (1.544 Mbps) |
| EO | - End office |
| EWSD | - Elektronisches Wahl-System Digital (Siemens switch) |
| HEID | - Heidelberg, Germany |
| kbps | - kilobits per second |
| MANN | - Mannheim, Germany |
| Mbps | - Megabits per second |
| MFS | - Multi-function Switch |
| MSL | - Meridian Switching Load (Nortel Networks switch) |
| OCU-DP | - Office Channel Unit-Data Port |
| SS7 | - Signaling System 7 |
| SSP | - Service Switching Point |
| STP | - Signal Transfer Point |
| V.35 | - Standard data link interface (56/64 kbps) |

Note:
241-245-000 to 241-250-001 are Signaling Point Code (SS7 addresses)

**Figure 1. Test Network Configuration**

**9. SYSTEM CONFIGURATIONS.** Table 3 lists the hardware and software configurations associated with the components used during the test.

**Table 3. Tested System Configuration**

| System Name | Hardware | Software |
|---|---|---|
| Tekelec Eagle STP | Eagle Data Packet Switch | Release 28.0.1-41.53.0 |
| Nortel Networks Broadband STP | Signaling Server Platform | Version USP 7.0.2.48C |
| Nortel Networks MSL-100 SSP | RISC Processor | MSL-17 |
| Siemens EWSD SSP | CP 113C | Version 19D, Patch Set 35 |
| Lucent 5ESS SSP | 5ESS | 5E15 |
| Prominia 400 | Promina 400 | 2.04.03 |
| Premisys IMACS/800 Channel Bank | Premisys IMACS/800 | Release 3.8.0 |
| Access-T 1500 CSU/DSU | Access-T 1500 | 087-161E-03C/087-062E-01C |

**LEGEND:**

5ESS - Electronic Switching System (No. 5)
CP - Central Processor
CSU - Channel Service Unit
DSU - Data Service Unit
EWSD - Elektronisches Wahl-System Digital
MSL - Meridian Switching Load
RISC - Reduced Instruction Set Computer
SSP - Service Switching Point
STP - Signal Transfer Point

**10. TESTING LIMITATIONS.** All interfaces required for initial deployment of the Tekelec Eagle STP were successfully tested in an operationally realistic environment. However, JITC was unable to generate enough voice and signaling traffic to demonstrate compliance with the signaling link congestion control requirements specified in reference (c). This limitation will have no operational impact in DISN-Europe or DISN-Pacific because the Tekelec Eagle STPs are currently deployed successfully in large commercial SS7 networks with volumes of signaling traffic in excess of what the Department of Defense (DOD) is expected to generate. Due to a limitation of available V.35 interfaces only the A-link signaling was tested. Since the B-link and C-links utilize the exact same hardware in the Tekelec Eagle STP and pass the exact same protocol messages, there was no operational impact.

## 11. TEST RESULTS

**a. Conformance Results.** The Tekelec Eagle STP meets all the SS7 STP conformance requirements in accordance with references (c) and (d) using the detailed test procedures described in reference (e), with one exception (refer to table 1). Sub-test 6.0 (Signaling Link Congestion) was not tested because the traffic loading resources currently available at the JITC were unable to initiate enough call attempts to overload a signaling link or exceed congestion onset thresholds. The inability to verify STP and SSP compliance with congestion control requirements has a minimal operational impact as the Tekelec Eagle STPs are successfully operating in large commercial SS7 networks that have very volumes of signaling traffic. One 56-kbps

signaling link has more than enough capacity to support the traffic normally routed between two DSN SSPs. Thus, the signaling link between two DSN SSPs will support the DOD signaling traffic.

**b. Interoperability Results**

(1) Interoperability between the Tekelec Eagle STP and the Nortel Networks MSL-100, Siemens EWSD, and Lucent 5ESS SSPs was successfully tested via the following SS7 signaling link interfaces: A-Links, B-Links, and C-Links. These links were delivered to the Tekelec Eagle STP via OCU-DP, and V.35 interfaces as shown in figure 1. SS7 call setup and control messages were routed to the correct destinations by the STPs and inter-switch calls were completed successfully. Signaling link management functions such as initial alignment, changeover, change-back, and emergency alignment were executed properly by the STPs and SSPs.

(2) Interoperability between the Tekelec Eagle STP and Nortel Networks Broadband STP (BBSTP) was also successfully tested via SS7 B-links as shown in figure 1. SS7 call setup, control, and signaling network management messages were successfully routed via between the Tekelec Eagle STP and Nortel Networks BBSTP. The Tekelec Eagle STP performed signaling network management functions in accordance with requirements specified in references (c) and (d).

**12. SUMMARY.** The Tekelec Eagle STP with Software Release 28.0.1-41.53.0 meets the interoperability requirements for deployment in DSN and is certified for joint use in accordance with the requirements set forth in references (c) and (d). A summary of test results is listed in table 4.

## Table 4. Eagle STP Conformance and Interoperability Status

| Conformance Status | | | |
|---|---|---|---|
| **Conformance Requirement** | **ER/Criteria** | **Critical** | **Status** |
| SS7 Network Structure | SS7 structure (GSCR Para 6.5.1) | Yes | Met |
| | Gateway screening (GSCR Para 6.5.1.1) | Yes | Met |
| Signaling Link Characteristics | SS7 link performance with stored program control switches (GSCR Para 6.5.1, 6.5.2) | Yes | Met |
| Signaling Message Handling, Formats and Codes | LSSU codes and format (GSCR Para 6.5.3, 6.5.4, 6.5.10) | Yes | Met |
| | Emergency alignment (GSCR Para 6.5.2, 6.5.4) | Yes | Met |
| | Message formats (GSCR Para 6.5.10, 6.5.11) | Yes | Met |
| | Message handling (GSCR Para 6.5.3) | Yes | Met |
| | SCCP capabilities (GSCR Para 6.5.5) | Yes | Met |
| | Load sharing (GSCR Para 6.5.3.1) | Yes | Met |
| Signaling Network Management | Signaling link management (GSCR Para 6.5.4) | Yes | Met |
| | Signaling route management (GSCR Para 6.5.4) | Yes | Met |
| Error Detection and Recovery | Basic error detection and recovery (GSCR Para 6.5.2.1) | Yes | Met |
| | PCR error detection and recovery (GSCR Para 6.5.2.1) | Yes | Met |
| Signaling Link Congestion | Signaling link congestion (GSCR Para 6.5.4.2) | No | Not tested |
| V.35 & OCU-DP | A-Link Signaling | Yes | Certified |
| | B-Link Signaling | Yes | Certified |
| | C-Link Signaling | Yes | Certified |
| DS0A | Same as V.35/OCU-DP | No | Not tested[1] |
| DS1 | Same as V.35/OCU-DP | No | Not tested[1] |

**LEGEND:**

A-Link - Access Link (SS7)
B-Link - Bridge Link (SS7)
C-Link - Cross Link (SS7)
DS0 - Digital Signal Level Zero: One 64 kbps channel
DS0A - A process where a sub-rate signal is repeated 20, 10, or 5 times to make a 64 kbps DS0 channel
DS1 - Digital Signal Level One: 1.544 Mbps North America Transmission
ER - Exchange Requirements
GSCR - Generic Switching Center Requirements
ITU - International Telecommunication Union
kbps - kilobits per second
LSSU - Link Status Signaling Units
Mbps - Megabits per second
OCU-DP - Office Channel Unit-Data Port
PCR - Preventive Cyclic Redundancy
SCCP - Signaling Connection Control Part
SS7 - Signaling System 7
STP - Signal Transfer Point
V.35 - ITU standard for synchronous data circuits

**Note:**
1 Per the GSCR, only one of the four STP interfaces is required for certification (V.35, DS0A, DS1, or OCU-DP).